Code Compliance Research Report
CCRR-0132

Issue Date: 12-01-2008
Revision Date: 08-28-2026
Renewal Date: 03-31-2027

DIVISION: 06 00 00 – WOOD, PLASTICS AND COMPOSITES
Section: 06 63 00 – Plastic Railings

REPORT HOLDER:
Trex Company, Inc.
2500 Trex Way
Winchester, VA 22601
(540) 542-6300
www.trex.com

REPORT SUBJECT:
***Trex Transcend®* Composite Railing**
***Trex Transcend® Post-to-Post Cocktail* Composite Railing**
***Trex Select®* Classic Composite Railing**
***Trex Enhance®* Composite Railing**
***Trex Select Mesh*™ Composite Railing**
***Trex Select T-Rail®* Composite Railing**

1.0 SCOPE OF EVALUATION

1.1 This Research Report addresses compliance with the following Codes:

- 2024, 2021 and 2018 *International Building Code®* (IBC)
- 2024, 2021 and 2018 *International Residential Code®* (IRC)

NOTE: This Report references 2024 Code sections. Section numbers in earlier versions of the Codes may differ.

1.2 *Trex Transcend®*, *Select®* and *Enhance®* railing systems have been evaluated for the following properties:

- Structural Performance
- Durability
- Surface Burning
- Decay Resistance
- Termite Resistance

1.3 *Trex Transcend®*, *Select®* and *Enhance®* railing systems have been evaluated for the following uses:

- *Trex Transcend®*, *Select®* and *Enhance®* railing systems are guardrails (guards) under the definitions of the referenced Codes and are intended for use on elevated walking areas in buildings and walkways, including stairs and ramps, as required by the referenced Codes.
- Guardrail systems are provided as level guards for level walking areas such as decks, balconies and porches, and sloped guards for open sides of stairways.
- Guardrail systems recognized in this Report may be used in One- and Two-Family Dwellings regulated by the IRC and all construction types regulated by the IBC in accordance with IBC Sections 705.2.2 and 705.2.3.1, Exceptions 2 and 3. Guardrails less than 42" high are limited to use in One- and Two-Family Dwellings (IRC). See Table 1 for additional restrictions based upon Use and Occupancy Classification.

2.0 STATEMENT OF COMPLIANCE

Trex Transcend®, *Select®* and *Enhance®* railing systems comply with the Codes listed in Section 1.1, for the properties stated in Section 1.2 and uses stated in Section 1.3, when installed as described in this Report, including the Conditions of Use stated in Section 6.0.

2.1 2024 IBC and IRC Evaluation Reports

The Intertek CCRR is an *Evaluation Report* for approval of an alternate material, design, or method of construction in accordance with Section 104.2.3.6.1 of the 2024 IBC and Section R104.2.2.6.1 of the 2024 IRC.

3.0 DESCRIPTION

3.1 Railing systems include top and bottom rails, baluster spacers and rail inserts (*Transcend®* only), balusters, mesh panels, post sleeves, rail brackets, foot blocks and decorative moldings. See Table 1 for recognized railing dimensions.

3.2 Rails and post sleeves are wood-plastic composite extrusions with a PVC or acrylic cap layer, baluster spacers and rail inserts are PVC extrusions, and balusters are either wood-plastic composite or aluminum extrusions. Mesh

panels are steel. Rail brackets, foot blocks and decorative moldings are injection-molded plastic parts.

3.3 *Trex Transcend®* railing is produced in Charcoal Black, Classic White, Rope Swing, and Vintage Lantern, consisting of the following components (see Figure 2):

3.3.1 The top rail is a crown profile with overall dimensions of 3.312" wide by 2.453" tall.

3.3.2 The universal (bottom) rail is an "H" profile with overall dimensions of 3.000" wide by 2.004" tall.

3.3.3 A *Trex Transcend® Lineage®* 1x4 composite deck board may be attached to an inverted universal (bottom) rail used as top rail to provide a drink rail option (see Figure 2).

3.3.4 Infill Options:

3.3.4.1 Balusters are available in a 1.418" square composite profile or 0.750" round aluminum profile. Balusters are inserted into holes in baluster spacers snapped into the top and bottom rails. Rail inserts are installed into the top and bottom rails when using aluminum balusters.

3.3.4.2 Glass panel of 1/4 inch thick tempered glass. The glass panel is inserted into the top rail and slides up, to clear the bottom rail. The glass panel is aligned with the bottom insert and pushed down into the insert.

3.3.5 Rails are attached to posts with nylon brackets.

3.3.6 The post sleeve is a 4.450" square profile with two or three internal ribs of each wall. The post sleeve is produced in Charcoal Black, Classic White, Rope Swing and Vintage Lantern. Post sleeve options are shown in Figure 8.

3.4 *Trex Select® Classic* railing is produced in Charcoal Black and Classic White, and *Trex Enhance®* railing is produced in Charcoal Black, Classic White, Saddle and Vintage Lantern. Both railing systems consist of the following components (see Figure 4):

3.4.1 The top and bottom rails are rectangular profiles with overall dimensions of 2.750" wide by 2.000" tall. The top rail is oriented flatwise, and the bottom rail is oriented edgewise.

3.4.2 Infill Options:

3.4.2.1 Balusters are only available in a 0.750" round aluminum profile.

3.4.3 Rails are attached to posts with nylon brackets.

3.4.4 The post sleeve is produced in Charcoal Black, Classic White, Saddle and Vintage Lantern. Post sleeve options are shown in Figure 8.

3.5 *Trex Select Mesh™* railing is produced in Charcoal Black. The railing system consist of the following components (see Figure 4):

3.5.1 The top and bottom rails are rectangular profiles with overall dimensions of 2.750" wide by 2.000" tall. The top rail is oriented flatwise, and the bottom rail is oriented edgewise.

3.5.2 Infill Options:

3.5.2.1 Steel mesh panel with 4" x 4" openings. The steel mesh panel is captured by u-shaped aluminum channel with a co-extruded PVC anti-rattle gasket applied to the top rail, bottom rail and both end posts.

3.5.3 The top rail is attached to posts with metal brackets. The bottom rail is attached to posts with nylon brackets.

3.5.4 The post sleeve is produced in Charcoal Black. Post sleeve options are shown in Figure 8.

3.6 *Trex Select T-Rail®* railing is produced in Classic White. The railing system consist of the following components (see Figure 6):

3.6.1 The top rail is a T-shaped profile with top width of 3.500" and overall height of 2.960"

3.6.2 Balusters are available in a 1.000" square composite profile and a 0.750" round aluminum profile.

3.6.3 Rails are attached to posts with nylon brackets.

3.6.4 The post sleeve is produced in Classic White. Post sleeve options are shown in Figure 8.

4.0 PERFORMANCE CHARACTERISTICS

4.1 The guardrail systems described in this Report have demonstrated the capacity to resist the design loadings specified in Chapter 16 of the IBC and Section R301 of the IRC when tested in accordance with ICC-ES AC174 and ASTM D7032.

4.2 Structural performance has been demonstrated for a temperature range from -20 °F to 125 °F.

4.3 Materials used are deemed equivalent to preservative treated or naturally durable wood for resistance to weathering effects, decay and attack from termites. See Section 6.6 for limitations.

4.4 Materials used have a flame spread index of less than 200 when tested in accordance with ASTM E84.

5.0 INSTALLATION

5.1 General

Trex Transcend®, *Select® Classic*, *Enhance®*, *Select Mesh*™ and *Select T-Rail®* railing systems must be installed in accordance with the manufacturer's published installation instructions, the applicable Code and this Research Report. A copy of the manufacturer's instructions must be available on the jobsite during installation.

5.2 *Trex Transcend®* Railing (Figure 1)

5.2.1 The top and universal (bottom) rails are attached via bracket connections to conventional 4x4 wood posts covered with composite post sleeves. See Table 2 for fastening schedule.

5.2.2 Baluster spacers are snapped into the top and universal (bottom) rails and secured by a friction fit, and balusters are inserted into holes punched in the baluster spacers. When using aluminum balusters, rail inserts are installed into the top and universal (bottom) rails prior to installing the baluster spacers.

5.2.3 The foot block is an adjustable support installed between the deck surface and bottom rail using one #8-10 x 1-1/4" bugle head wood screw. At least one foot-block shall be installed at the midspan of the railing. For IBC use at spans over 6' OC, two foot-blocks shall be installed at the one-third points of the railing.

5.2.4 A *Trex* 1x4 composite deck board may be attached to an inverted universal (bottom) rail used as top rail with #8-10 by 1-5/8" Square-Philips combo drive, pan-washer head screws. The screws were located in the baluster cavity and screwed through the rail to the underside of the deck board. These screws were spaced 3" from each end and 15" on-center. And one #9-11 x 2-1/2" screw is toe-nailed through the deck board to the post at each end.

The 1x4 deck board component shall be the Trex *Transcend® Lineage®* composite deck board recognized in Intertek CCRR-0301.

5.3 *Trex Select® Classic, Enhance®* and *Select Mesh*™ Railing (Figure 3)

5.3.1 The top and bottom rails are attached via bracket connections to conventional 4x4 wood posts covered with composite post sleeves. See Table 2 for fastening schedule.

5.3.2 Balusters for Trex Select® Classic, Enhance® are inserted into holes routed in the top and bottom rails.

5.3.3 Mesh panels for Trex *Select Mesh*™ are installed to aluminum channels with PVC anti-rattle gaskets attached to the top rail, bottom rail and posts.

5.3.4 The foot block is an adjustable support installed between the deck surface and bottom rail using one #8-10 x 1-1/4" bugle head wood screw. One foot block shall be installed at the midspan of the railing.

5.4 *Trex Select T-Rail®* Railing (Figure 5)

5.4.1 The top and bottom rails are attached via bracket connections to conventional 4x4 wood posts covered with composite post sleeves. See Table 2 for fastening schedule.

5.4.2 Balusters are inserted into holes routed in the top and bottom rails.

5.4.3 The foot block is an adjustable support installed between the deck surface and bottom rail using one #8-10 x 1-1/4" bugle head wood screw. One foot block shall be

installed at the midspan of the railing.

5.5 The wood in the supporting structure, including support posts, shall have a specific gravity of 0.55 or greater (Southern Yellow Pine or better) and a minimum thickness to allow full penetration of the bracket mounting screws.

6.0 CONDITIONS OF USE

6.1 Installation must comply with this Research Report, the manufacturer's published installation instructions and the applicable Code. In the event of a conflict, this Report governs.

6.2 See Section 1.3 for construction types and use classifications.

6.3 Conventional wood supports, including support posts for guardrails, are not within the scope of this Report and are subject to evaluation and approval by the building official. Supports must satisfy Section R507.10 of the 2024 IRC, satisfy the design load requirements specified in Chapter 16 of the IBC, and must provide suitable material for anchorage of the rail brackets. Where required by the building official, engineering calculations and details shall be provided.

6.4 Only those types of fasteners and fastening methods described in this Report have been evaluated for the installation of the products listed in Section 1.0; other methods of attachment are outside the scope of this Report.

6.5 Compatibility of fasteners and other metallic components with the supporting structure, including chemically treated wood, is not within the scope of this Report.

6.6 The wood-plastic composite material used in the *Trex* guardrail systems described in this Report has not been evaluated for use in areas subject to Formosan termite attack.

6.7 The glass infill panel of railings are considered a hazardous location as defined by Sections 2406.4 of the IBC. Glass must be identified by permanent etching as required by Section 2406.3 of the IBC. Each section of glass must bear the manufacturer's name or mark and the applicable test standard (Class A of ANSI Z97.1 and Category II of 16 CFR 1201). Railings with glass infill are not approved for use in wind-borne debris regions as defined by the IBC in accordance with Section 2407.1.4.

6.8 *Trex* railing systems are manufactured in Winchester, VA, in accordance with the manufacturer's approved quality control system, with inspections by Intertek Testing Services, Inc.

7.0 SUPPORTING EVIDENCE

7.1 Drawings and installation instructions submitted by the manufacturer.

7.2 The reports of testing and engineering analysis proving compliance with the performance requirements of ICC-ES AC174, *Acceptance Criteria for Deck Board Span Ratings and Guardrail Systems (Guards and Handrails)*, approved January 2012, editorially revised April 2024.

7.3 The reports of testing and engineering analysis demonstrating compliance with the performance requirements of ASTM D7032-21, *Standard Specification for Establishing Performance Ratings for Wood-Plastic Composite and Plastic Lumber Deck Boards, Stair Treads, Guards, and Handrails*; with additional testing including increased test loads to address 2021 IBC Section 2407.1.1 for assemblies that utilize a glass infill panel.

7.4 Documentation of an Intertek-approved quality control system for the manufacturing of products recognized in this Report.

8.0 IDENTIFICATION

The *Trex* railing systems described in this Report shall be identified with labeling on the packaging to include the following:

8.1 Name and/or trademark of the manufacturer and the manufacturer's web address.

8.2 The following statement: "See CCRR-0132 at bpdirectory.intertek.com for use and performance levels." For railing systems limited to IRC use in Table 1, the label shall also include the phrase, "For Use in One- and Two-Family Dwellings Only."

8.3 The Intertek Code Compliance Research Report mark and number (CCRR-0132).

CODE COMPLIANCE
Intertek
CCRR-0132

10.2 Code Compliance Research Reports shall not be used in any manner that implies an endorsement of the product by Intertek.

10.3 Reference to https://bpdirectory.intertek.com is recommended to ascertain the current version and status of this Report.

9.0 OTHER CODES

This section is not applicable.

10.0 CODE COMPLIANCE RESEARCH REPORT USE

10.1 Approval of building products and/or materials can only be granted by a building official having legal authority in the specific jurisdiction where approval is sought.

This Code Compliance Research Report ("Report") is for the exclusive use of Intertek's Client and is provided pursuant to the agreement between Intertek and its Client. Intertek's responsibility and liability are limited to the terms and conditions of the agreement. Intertek assumes no liability to any party, other than to the Client in accordance with the agreement, for any loss, expense or damage occasioned by the use of this Report. Only the Client is authorized to permit copying or distribution of this Report and then only in its entirety, and the Client shall not use the Report in a misleading manner. Client further agrees and understands that reliance upon the Report is limited to the representations made therein. The Report is not an endorsement or recommendation for use of the subject and/or product described herein. This Report is not the Intertek Listing Report covering the subject product and utilized for Intertek Certification and this Report does not represent authorization for the use of any Intertek certification marks. Any use of the Intertek name or one of its marks for the sale or advertisement of the tested material, product or service must first be approved in writing by Intertek.

TABLE 1 – LEVEL GUARDRAIL SYSTEM BUILDING CODE RECOGNITION

Guardrail System	Balusters	Guardrail System Size (Length x Height) [(1)]	Number of Foot Blocks	Code Recognition
Trex Transcend®	1.418” Square Composite Baluster or 0.750” Round Aluminum Baluster	72" x 36"	1	IRC – One- and Two-Family Dwellings
		72" x 42"	1	IRC – One- and Two-Family Dwellings IBC – All Use Groups
		96” x 36”	1	IRC – One- and Two-Family Dwellings
		96” x 42”	1	IRC – One- and Two-Family Dwellings
	1/4" thick, 36" tall, 59-1/2" wide, Tempered Glass Panel	68” x 42”	1	IRC – One- and Two-Family Dwellings
Trex Transcend® Post-to-Post Cocktail Rail	1.418” Square Composite Baluster or 0.750” Round Aluminum Baluster	96” x 36”	1	IRC – One- and Two-Family Dwellings
Trex Select® Classic *Trex Select Mesh™*	0.750” Round Aluminum Baluster or 4” x 4” Steel Mesh	72" x 36"	1	IRC – One- and Two-Family Dwellings
		72" x 42"	1	IRC – One- and Two-Family Dwellings
		96” x 36” (see Note 2)	1	IRC – One- and Two-Family Dwellings
		96” x 42” (see Note 2)	1	IRC – One- and Two-Family Dwellings

TABLE 1 – LEVEL GUARDRAIL SYSTEM BUILDING CODE RECOGNITION (CONTINUED)

Guardrail System	Balusters	Guardrail System Size (Length x Height) [1]	Number of Foot Blocks	Code Recognition
Trex Select T-Rail®	1.000” Square Composite Baluster or 0.750” Round Aluminum Baluster	72" x 36"	1	IRC – One- and Two-Family Dwellings
		72" x 42"	1	IRC – One- and Two-Family Dwellings
		96” x 36” (see Note 3)	1	IRC – One- and Two-Family Dwellings
		96” x 42” (see Note 3)	1	IRC – One- and Two-Family Dwellings
		120” x 36” (see Note 3)	2	IRC – One- and Two-Family Dwellings
		120” x 42” (see Note 3)	2	IRC – One- and Two-Family Dwellings
Trex Enhance®	0.750” Round Aluminum Baluster	72” x 36”	1	IRC – One- and Two-Family Dwellings
		72” x 42”	1	IRC – One- and Two-Family Dwellings
		96” x 36” (see Note 2)	1	IRC – One- and Two-Family Dwellings
		96” x 42” (see Note 2)	1	IRC – One- and Two-Family Dwellings

[1]Level railing length is the maximum clear length between supports. Railing height is the minimum installed height from the walking surface to the top of the top rail.
[2]Guardrail system length greater than 72" requires top rail aluminum stiffener (see Figure 4).
[3]Guardrail system length greater than 72" requires top rail aluminum stiffener (see Figure 6).

TABLE 2 – GUARDRAIL ASSEMBLY/FASTENING SCHEDULE

Connection	Fasteners
Trex Transcend®	
Rail Bracket to Post	Two #8-10 x 2” bugle head, #2 square drive, coated, steel wood screws
Rail Bracket to Rail	Three #8-18 x 1-1/4” pan head, #2 square drive, coated, steel self-drilling screws
Balusters to Rails	Inserted into holes in baluster spacers snapped into rails
Glass Infill Panel to Rails	Inserted into rails by snapping into the panel support molding
Foot Block to Bottom Rail	Inserted into pre-drilled hole in rail
Post-to-Post Cocktail Rail to Inverted Universal (Bottom) Rail	#8-10 by 1-5/8” Square-Philips combo drive, pan-washer head screws spaced 3” from each end and 15” on-center.
Post-to-Post Cocktail Rail to Post	One #9-11 x 2-1/2” screw toe-nailed through the edge of deck board to the post at each end of railing.
Trex Select® Classic/Trex Enhance®	
Rail Bracket to Post	Two #9-16 x 2” bugle head, #2 square drive, coated, steel wood screws
Rail Bracket to Rail	Three #8-18 x 1” pan head, #2 square drive, coated, steel self-drilling screws
Balusters to Rails	Inserted into holes in rails
Foot Block to Bottom Rail	Inserted into pre-drilled hole in rail
Trex Select Mesh™	
Rail Bracket to Post	Two #9-16 x 2” bugle head, #2 square drive, coated, steel wood screws
Rail Bracket to Rail	Three #8-18 x 1” pan head, #2 square drive, coated, steel self-drilling screws
Mesh Channels to Posts and Rails	#8-18 x 1-1/4” square-drive, panhead, self-drilling coated carbon steel screws. Three (3) at each post, equally spaced. Five (5) at top and bottom rail, equally spaced.
Anti-Rattle Gaskets	Inserted into mesh channels
Steel Mesh Infill Panel	Inserted into anti-rattle gasket at top rail, bottom rail and posts
Foot Block to Bottom Rail	Inserted into pre-drilled hole in rail
Trex Select T-Rail®	
Top Rail Bracket to Post	Two #9-16 x 2" flat head, #2 square drive, coated, steel screws
Top Rail Bracket to Rail	Four #8-18 x 1" pan head, #2 square drive, coated, steel self-drilling screws
Bottom Rail Bracket to Post	Two #9-16 x 2" flat head, Phillips drive, coated, steel screws
Bottom Rail Bracket to Rail	Three #8-18 x 1" pan head, #2 square drive, coated, steel self-drilling screws
Balusters to Rails	Inserted into holes in rails
Foot Block to Bottom Rail	Inserted into pre-drilled hole in rail

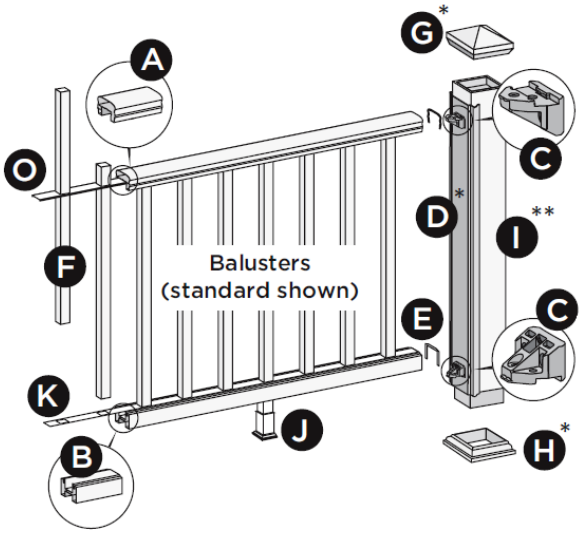

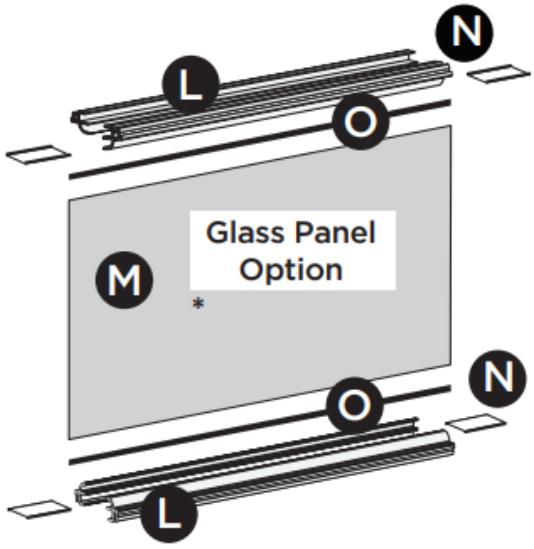

Trex Transcend Rail Parts List

A. Crown or Universal Rail
B. Universal Rail
C. Rail Bracket (RSB, Railing Support Bracket)
D. TrexExpress™ Railing Assembly Template.
E. Rail Gaskets
F. Balusters (Round Aluminum or Square Composite)
G. Post Sleeve Cap
H. Post Sleeve Skirt
I. Post Sleeve (compatible with Transcend 4x4, or Transcend 6x6, Post Sleeves)
J. Foot Block (Adjustable)
K. Baluster Spacer
L. Aluminum Baluster Adaptor (not shown)

Trex Transcend Glass Panel Parts List

L. Panel Support Molding
M. Tempered Glass Panel
N. Panel Support Molding Spacer
O. Weather-Stripping

FIGURE 1 – *TREX TRANSCEND*® RAILING ASSEMBLY

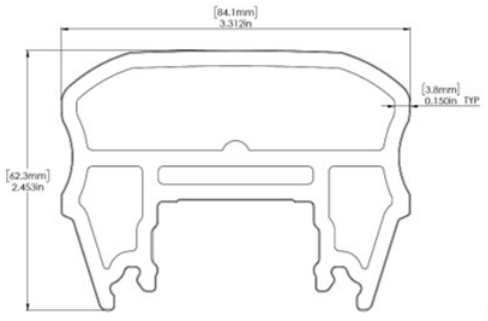

Top (Crown) Rail

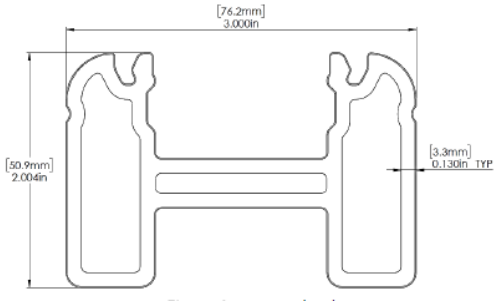

Bottom (Universal) Rail

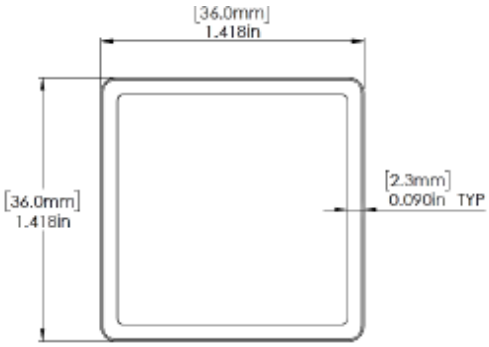

Square Composite Baluster

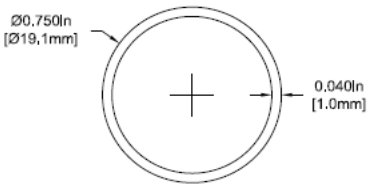

Round Aluminum Baluster

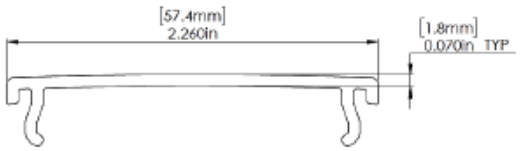

Baluster Spacer

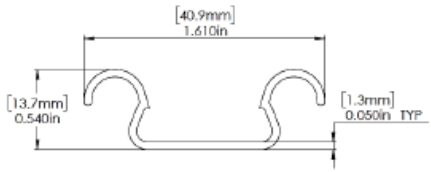

Aluminum Baluster Adapter Strip

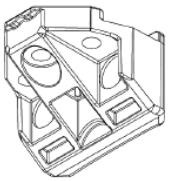

Rail Bracket

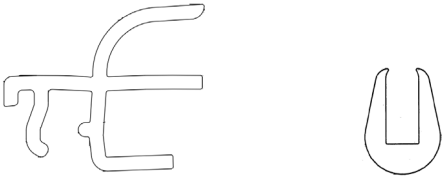

Glass Panel Support Molding and Gasket

FIGURE 2 – *TREX TRANSCEND*® GUARDRAIL COMPONENTS

Trex Transcend Post-to-Post Cocktail Parts List

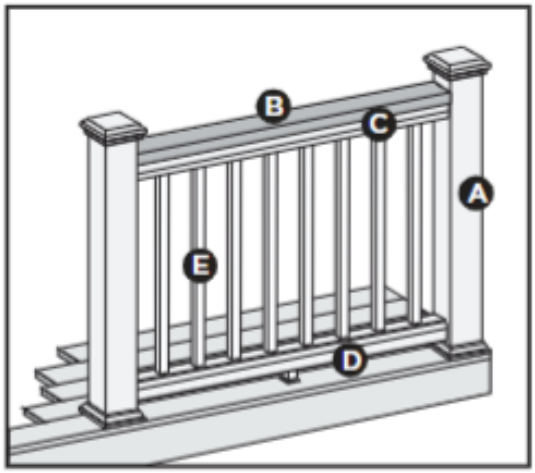

A. Post Sleeve
B. Trex 1x4 composite deck board
C. (Inverted) Universal Bottom Rail
D. Universal Bottom Rail
E. Balusters and Baluster spacers

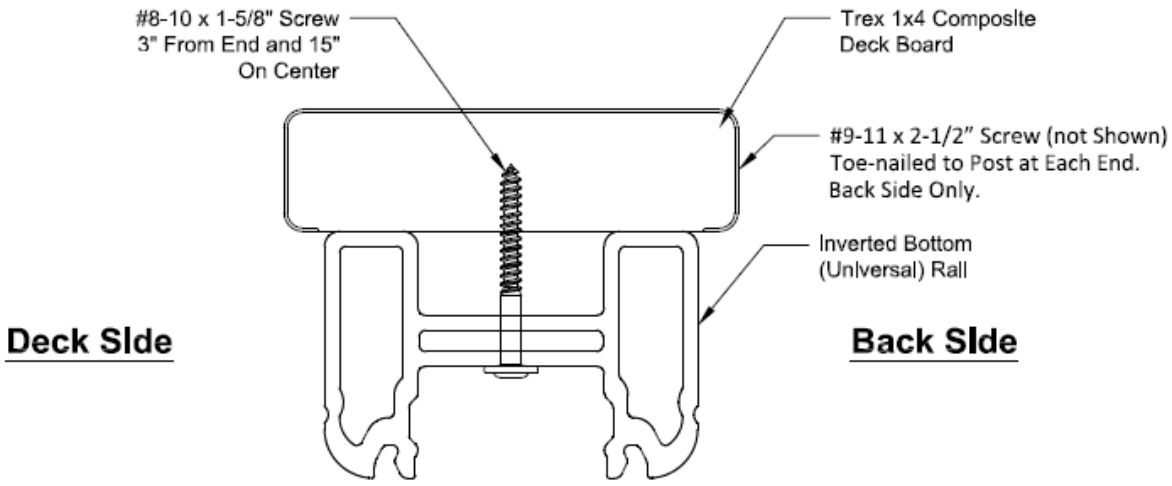

Inverted Universal (Bottom) Rail used as Top Rail for Post-to-Post Cocktail Rail

FIGURE 2 – *TREX TRANSCEND*® GUARDRAIL COMPONENTS (CONTINUED)

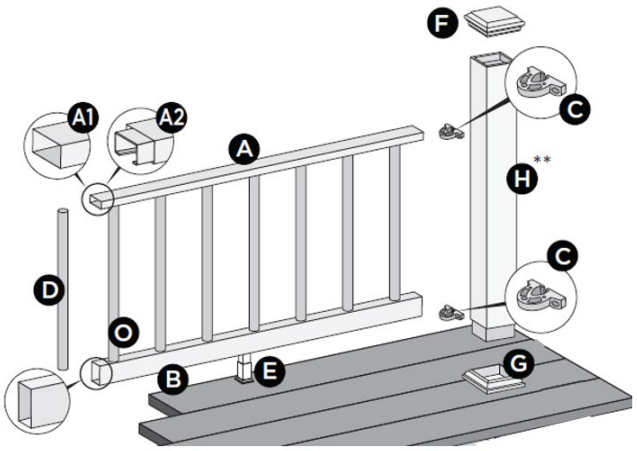

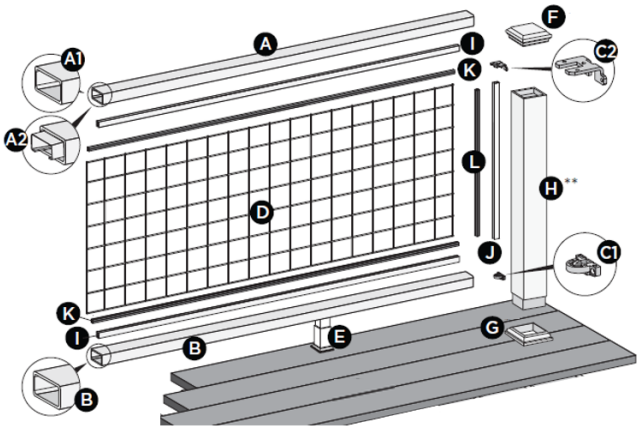

Trex Select Classic/Trex Enhance Rail Parts List

A./A1. Top Rail
A2. Top Rail Stiffener for over 72" installation (not included with Select Classic 8' Rail kit)
B. Bottom Rail
C. Rail Brackets
D. Round Aluminum Balusters
E. Foot Block (Adjustable)
F. Post Cap
G. Post Skirt
H. Post Sleeve** (compatible with Select 4x4, Enhance 4x4, Transcend 4x4, or Transcend 6x6, Post Sleeves)

Trex Select Mesh™ Rail Parts List

A./A1. Top Rail
A2. Top Rail Stiffener for over 72" installation (not included)
B. Bottom Rail
C1. Bottom Brackets
C2. Top Mesh Brackets
D. Steel Mesh Panel
E. Foot Block (Adjustable)
F. Post Cap
G. Post Skirt
H. Post Sleeve** (compatible with Select 4x4, Transcend 4x4, or Transcend 6x6, Post Sleeves)
I. Mesh Channels (Top and Bottom)
J. Mesh Channels (Vertical)
K. Anti-Rattle Gaskets (Top and Bottom)
L. Anti-Rattle Gaskets (Side)
M. Mesh Caps (not shown)

FIGURE 3 – *TREX SELECT® CLASSIC*/TREX *ENHANCE®* RAILING ASSEMBLY AND TREX SELECT MESH™ RAILING ASSEMBLY

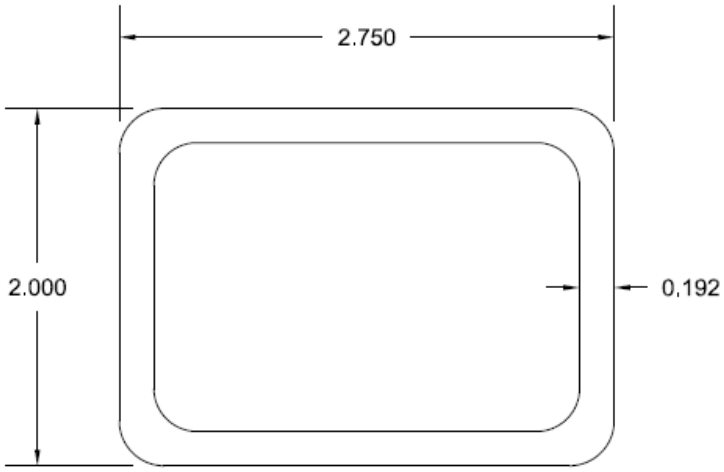

Top Rail

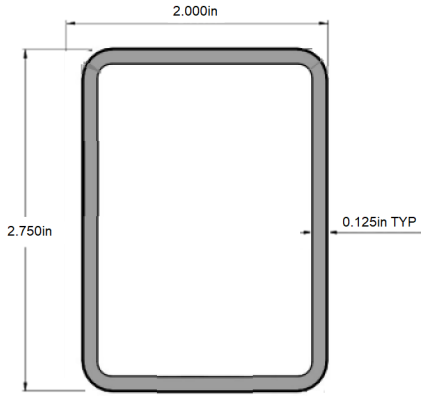

Bottom Rail

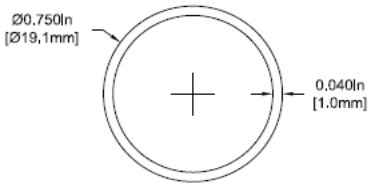

Round Aluminum Baluster

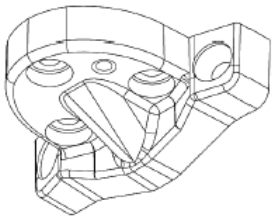

Rail Bracket

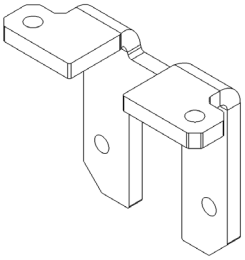

Select Mesh™ Top Rail Bracket

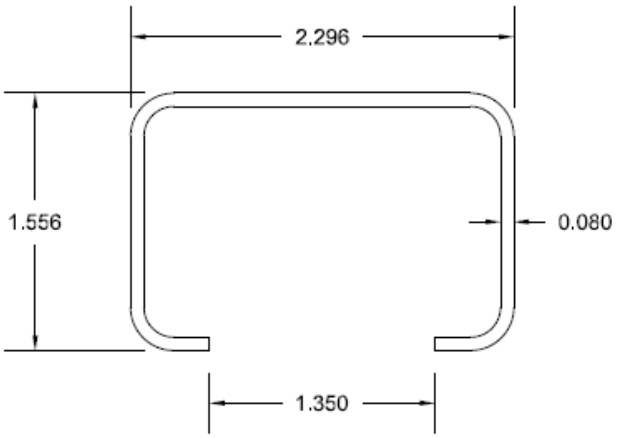

Top Rail Aluminum Stiffener

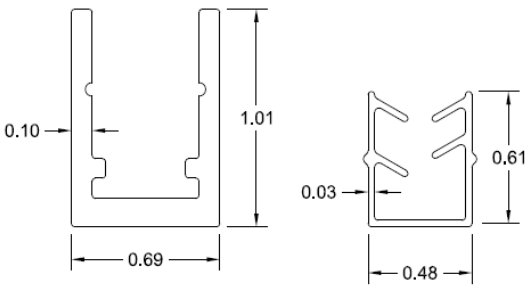

Select Mesh™ Channel and Anti-Rattle Gasket

FIGURE 4 – *TREX SELECT® CLASSIC*/TREX *ENHANCE®* AND TREX SELECT MESH™ GUARDRAIL COMPONENTS

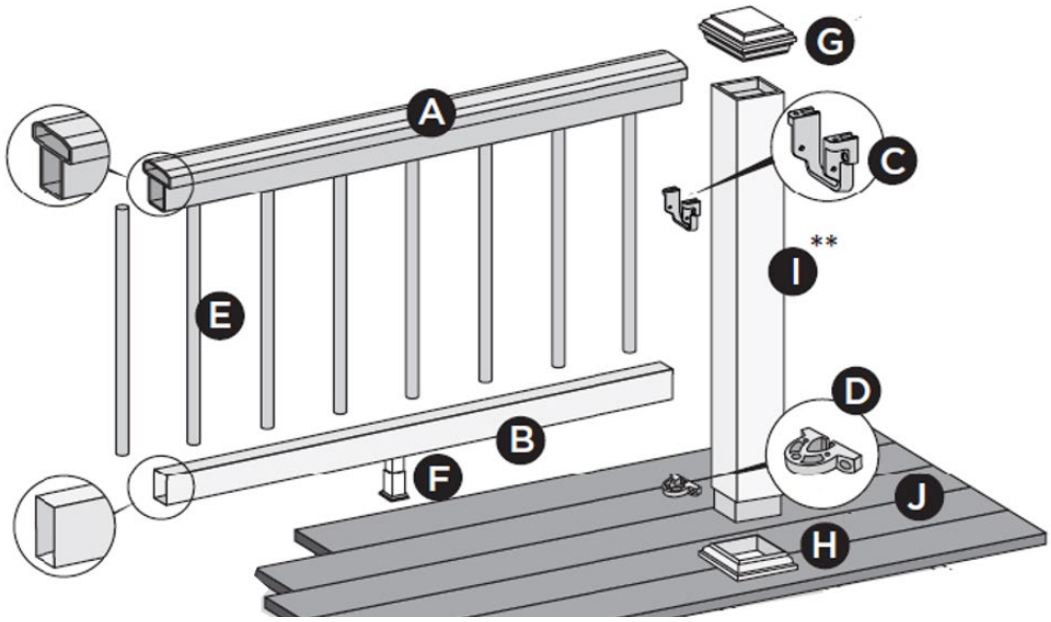

Trex Select T-Rail® Parts List

A. T-Rail®
B. Bottom Rail
C. Top Rail Brackets (T-Rail®)
D. Bottom Rail Brackets
E. Balusters (available in Round Aluminum or Square Composite)
F. Foot Block (Adjustable)
G. Post Sleeve Cap
H. Post Sleeve Skirt
I. Post Sleeve** (compatible with Select 4x4, Transcend 4x4, or Transcend 6x6, Post Sleeves)
J. Trex Decking
K. Top Rail Aluminum Stiffener (not shown)

FIGURE 5 – *TREX SELECT T-RAIL®* RAILING ASSEMBLY

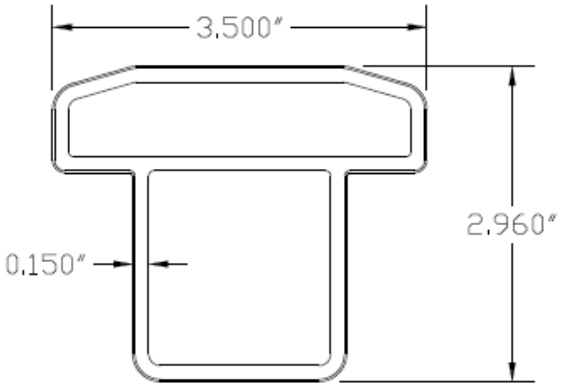

Top Rail

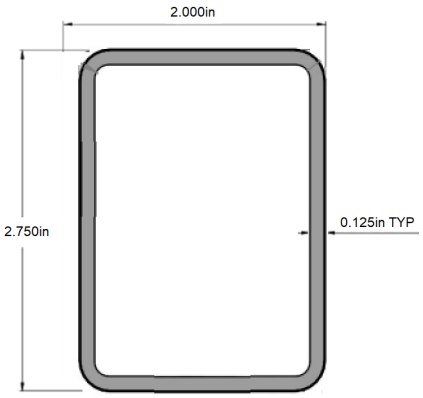

Bottom Rail

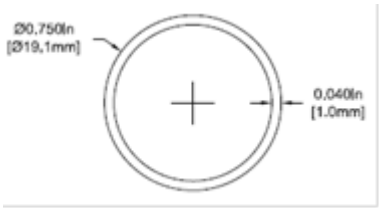

Round Aluminum Baluster

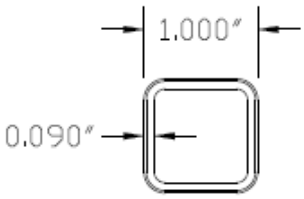

Square Composite Baluster

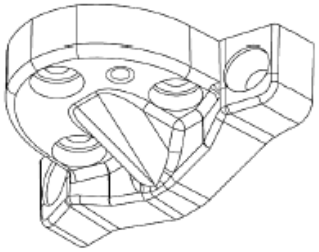

Bottom Rail Bracket

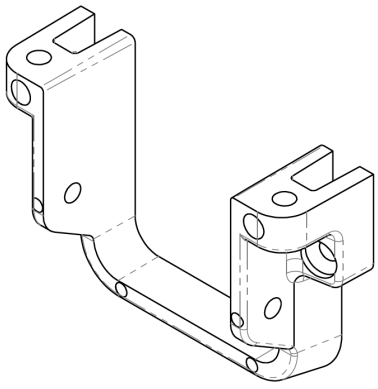

Top Rail Bracket

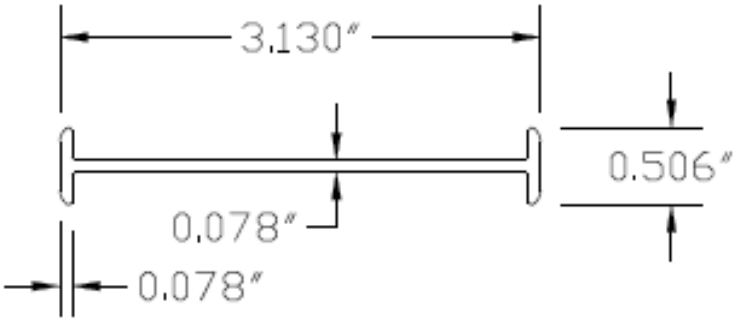

Top Rail Aluminum Stiffener

FIGURE 6 – *TREX SELECT T-RAIL®* GUARDRAIL COMPONENTS

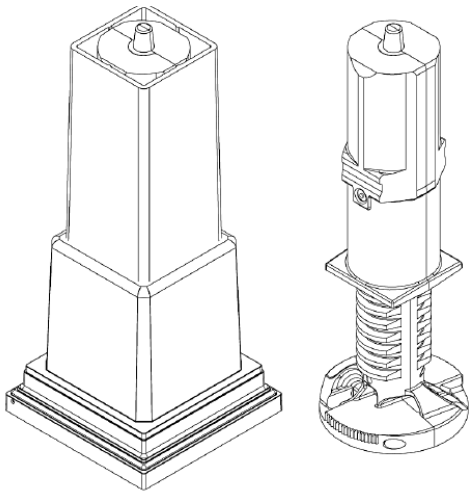

FIGURE 7 – FOOT BLOCK

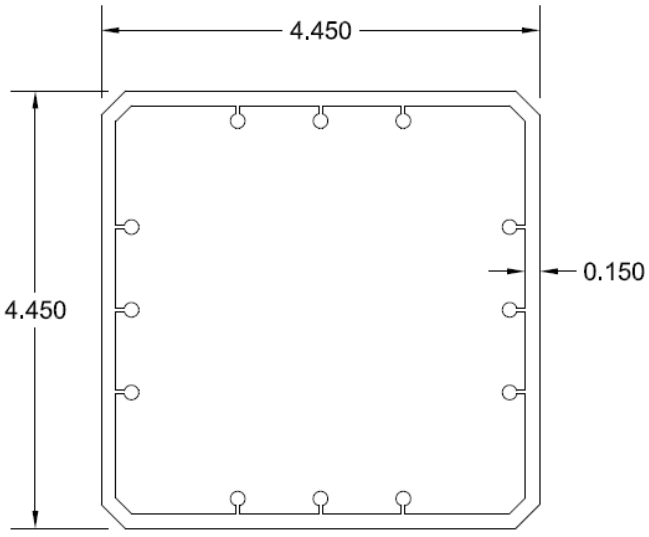

Transcend 4x4 Post Sleeve (3-rib)

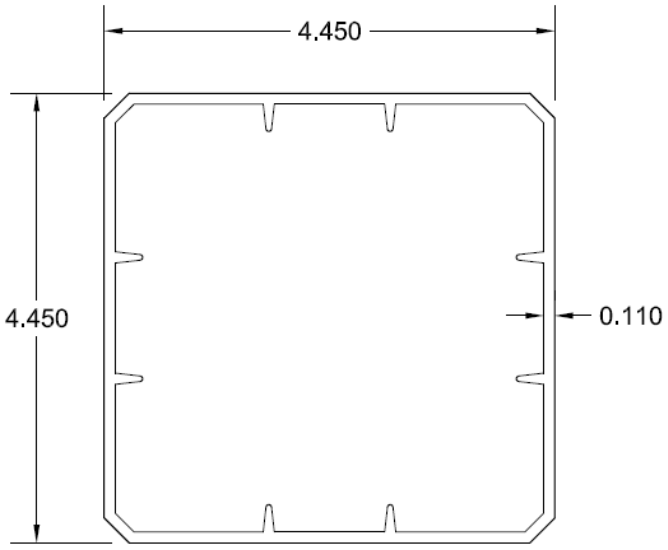

Transcend 4x4 Post Sleeve (2-rib)

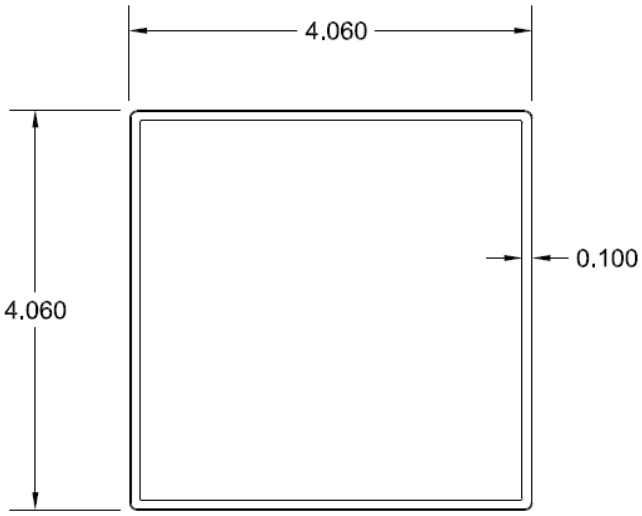

Select/Enhance 4x4 Post Sleeve

FIGURE 8 – 4X4 POST SLEEVES