Code Compliance Research Report
CCRR-0202

Issue Date: 02-21-2014
Revision Date: 02-27-2026
Renewal Date: 02-28-2027

DIVISION: 05 00 00 – METALS
Section: 05 52 00 – Metal Railings

REPORT HOLDER:
Trex Company, Inc.
2500 Trex Way
Winchester, VA 22601
(540) 542-6300
www.trex.com

REPORT SUBJECT:
Trex® Signature® Railing System
Trex® Signature® Rod Railing System
Trex® Signature® Mesh Railing System
Trex® Signature® Glass Railing System

1.0 SCOPE OF EVALUATION

1.1 This Research Report addresses compliance with the following Codes:

- 2015 and 2012 *International Building Code (IBC)*
- 2015 and 2012 *International Residential Code* (*IRC*)

1.2 *Trex® Signature®* railing systems have been evaluated for the following properties (see Table 1):

- Structural Performance

1.3 *Trex® Signature®* railing systems have been evaluated for the following uses (see Table 2):

- The *Trex® Signature®* railing systems are guards or guardrails under the definitions of the referenced Codes. It is intended for use at or near the open sides of elevated walking areas of buildings and walkways as required by the Codes.
- Guards are provided as level guards for level walking areas such as decks, balconies, and porches.
- Level guards are provided with rail lengths up to 96 inches in length (measured between the inside of support posts) and an installed height of 42 inches. See Table 2 for qualified configurations.

2.0 STATEMENT OF COMPLIANCE

Trex® Signature® and *Trex® Signature® Rod* Railing systems comply with the Codes listed in Section 1.1, for the properties stated in Section 1.2, and uses stated in Section 1.3, when installed as described in this report, including the Conditions of Use stated in Section 6.0.

3.0 DESCRIPTION

3.1 The *Trex® Signature®* railing systems are an assemblage of extruded aluminum materials, stainless steel fasteners, and cast Zamak 3 bracket materials.

3.2 The guardrail systems include a top rail, bottom rail, balusters, structural aluminum posts, rail-to-post brackets, and decorative moldings and post caps.

3.3 *Trex® Signature®* Railing and Trex® *Signature® Rod* Railing Systems

3.3.1 The top rail is an extruded aluminum rail with internal longitudinal ribs, dimensions of 1.75 inches wide by 1-7/16 inches tall. See Figure 3.

3.3.2 The bottom rail is an extruded aluminum rail with internal longitudinal ribs, dimensions of 1-3/4 inches wide by 1-1/4 inches tall. See Figure 4.

3.3.3 The *Trex® Signature®* Railing has vertical baluster infill. The infill area of the *Trex® Signature®* Railing utilizes evenly spaced aluminum square or round balusters (See Figure 5).

3.3.4 *Trex® Signature® Rod is* installed with horizontal rod infill. The *Trex® Signature® Rod* railing uses spaced horizontal rods that pass-through openings in vertical members at the middle and each end of the rail section. See Figure 9 and Figure 10.

3.4 *Trex® Signature® Mesh* Railing and *Trex® Signature® Glass* Railing Systems. See Figures 7 and 8.

3.4.1 The top rail is an extruded aluminum rail with overall nominal dimensions of 1.74 inches wide by 1.45 inches tall. The *Trex® Signature® Mesh* uses a PVC "U" channel insert as a steel mesh retainer. The *Trex® Signature® Glass* uses an EDPM "U" channel insert as a glass infill retainer.

3.4.2 The bottom rail is an extruded aluminum rail with overall nominal dimensions of 1.25 inches wide by 1 inch tall. The *Trex® Signature® Mesh* uses a PVC "U" channel insert as a steel mesh retainer. The *Trex® Signature® Glass* uses an EDPM "U" channel insert as a glass infill retainer.

3.4.3 The *Trex® Signature® Mesh* Railing has stainless steel mesh infill with two vertical rails and the *Trex® Signature® Glass* Railing has a 1/4-inch-thick tempered glass panel infill.

3.5 Aluminum post supports consist of a 2.5-inch square by 0.125-inch wall extruded aluminum tube. The tube is connected to a 4-inch square by 1/2-inch-thick aluminum base plate via a 1/4-inch continuous fillet weld on all four sides. See Figure 11.

3.6 A Crossover post is an intermediate post for the *Trex® Signature®* system that permits the uninterrupted connection of two top rails without the interruption of the post profile above the top railings. It consists of a 2.5-inch square by 0.125-inch wall extruded tube. The tube is connected to a 4-inch square by 1/2-inch-thick aluminum base plate via a 1/4-inch continuous fillet weld on all four sides. See Figure 11.

3.7 A foot block is installed between the lower rail and the deck surface spaced evenly between supports. See Figure 7.

4.0 PERFORMANCE CHARACTERISTICS

4.1 The guardrail system described in this report has demonstrated the capacity to resist the design loadings specified in Section R301 of the IRC when tested in accordance with ICC-ES AC273.

5.0 INSTALLATION

5.1 The *Trex® Signature®* railing systems must be installed in accordance with the manufacturer's published installation instructions, the applicable Code, and this Research Report. A copy of the manufacturer's instructions must be available on the jobsite during installation.

5.2 The top and bottom rails are attached directly to structural posts utilizing cast Zamak 3 mounting brackets via mechanical fasteners. See Figure 8 and Table 3.

5.3 For the *Trex® Signature® Railing,* aluminum balusters are inserted into routed holes in the aluminum rails and secured via PVC rail inserts that are installed internally to the rails. See Figure1. For the *Trex® Signature® Mesh* and *Trex® Signature® Glass,* the glass and mesh infill panels are inserted into the top rail and slides up to clear bottom rail. The panels are aligned with the bottom insert and pushed down into that insert. See Figures 3 and 4.

5.4 The *Trex® Signature®* railing systems are attached to 2.5-inch square aluminum posts.

5.4.1 For *Trex® Signature®* railings, 2.5-inch posts may be anchored to a wood deck in accordance with the details in Figure 11.

5.4.2 A minimum of four 3/8-inch diameter, 6-inch-long anchor bolts must be used and located in the four pre-drilled holes in the structural post base plate.

5.4.3 Pressure-treated 2x8 Southern Yellow Pine (specific gravity 0.50 or better) boards are used as blocking under the post location and are fastened between the joists with #10 x 3-inch wood screws in accordance with the National Design Specification for Wood Construction (ANSI/AWC NDS-2012). See Figure 13 for spacing and quantities.

5.4.4 A 3/8 inch thick, 4.5-inch square aluminum back plate is installed on the underside of the wood blocking as illustrated in Figure 9. This aluminum plate shall be factory painted or given a heavy coat of alkali-resistant bituminous paint to provide separation between any wood, fiberboard, or other porous material that absorbs water and the aluminum.

5.5 Decking shall be *Trex® Transcend®* and *Trex® Select®* deck boards (solid or grooved), *Trex® Enhance®* (solid or grooved) and Trex® Signature® deck boards as described in Intertek CCRR-0301, or decking equivalent in compressive strength.

6.0 CONDITIONS OF USE

6.1 Installation must comply with this Research Report, the manufacturer's published installation instructions, and the applicable Code. In the event of a conflict, this report governs.

6.2 Attachment of guardrail systems described herein to conventional wood supports is outside the scope of this report.

6.3 Where required by the building official, engineering calculations and details shall be provided. The calculations shall verify that the anchorage and supporting structure complies with the building code for the type and condition of the supporting construction.

6.4 Stainless steel shim plates are used to prevent direct contact between the structural post base plate and supporting structure.

6.5 Compatibility of fasteners and other metallic components with the supporting structure, including chemically treated wood, is outside the scope of this report.

6.6 *Trex® Signature® Glass* rail systems are limited to IRC One- and Two-Family Dwellings. The glass infill panel in the *Trex® Signature® Glass* is considered hazardous location as defined by Section R308.4.4 of the IRC. Glass must be identified by permanent etching as required by Section R308.1 of the IRC. Each section of glass must bear the manufacturer's name or mark and the applicable test standard. (Class A of ANSI Z97.1 and Category II of 16 CFR 1201).

6.7 *Trex® Signature® Glass* rail systems are not approved for use in wind-borne debris regions as defined by the IRC in accordance with Section R301.2.1.2

6.8 *Trex® Signature® Glass* rail systems have been evaluated for design live loads for guards only. Wind or other loadings are not within the scope of this evaluation.

6.9 The *Trex® Signature®* railing systems are manufactured under a quality control program with inspections by Intertek Testing Services NA, Inc.

7.0 SUPPORTING EVIDENCE

7.1 Drawings and installation instructions submitted by Trex Company, Inc.

7.2 Reports of testing demonstrating compliance with the performance requirements of ICC-ES AC273, Acceptance Criteria for Handrails and Guards, revised March 2016 with additional testing including increased test loads to address IBC Section 2407.1.1 for assemblies that utilize a glass infill panel.

7.3 Documentation of an Intertek approved quality control system for the manufacturing of products recognized in this report.

8.0 IDENTIFICATION

The *Trex® Signature®* Railing systems are identified with the manufacturer's name (Trex Company, Inc.), address and telephone number, the product name, when applicable, the statement "For Use in One- and Two-Family Dwellings Only.", the Intertek Mark as shown below, and the Code Compliance Research Report number (CCRR-0202).

CODE COMPLIANCE
Intertek
CCRR-0202

9.0 OTHER CODES

This section is not applicable.

10.0 CODE COMPLIANCE RESEARCH REPORT USE

10.1 Approval of building products and/or materials can only be granted by a building official having legal authority in the specific jurisdiction where approval is sought.

10.2 Code Compliance Research Reports shall not be used in any manner that implies an endorsement of the product by Intertek.

10.3 Reference to the https://bpdirectory.intertek.com is recommended to ascertain the current version and status of this report.

This Code Compliance Research Report ("Report") is for the exclusive use of Intertek's Client and is provided pursuant to the agreement between Intertek and its Client. Intertek's responsibility and liability are limited to the terms and conditions of the agreement. Intertek assumes no liability to any party, other than to the Client in accordance with the agreement, for any loss, expense or damage occasioned by the use of this Report. Only the Client is authorized to permit copying or distribution of this Report and then only in its entirety, and the Client shall not use the Report in a misleading manner. Client further agrees and understands that reliance upon the Report is limited to the representations made therein. The Report is not an endorsement or recommendation for use of the subject and/or product described herein. This Report is not the Intertek Listing Report covering the subject product and utilized for Intertek Certification and this Report does not represent authorization for the use of any Intertek certification marks. Any use of the Intertek name or one of its marks for the sale or advertisement of the tested material, product or service must first be approved in writing by Intertek.

TABLE 1 – PROPERTIES EVALUATED

PROPERTY	APPLICABLE CODE SECTIONS[1]	
	IBC SECTION	IRC SECTION
Structural Performance	1607.8	R301.5

[1]Section numbers pertain to the most recent edition cited in Section 1.1 of this Report.

TABLE 2 – CODE OCCUPANCY CLASSIFICATION

Guardrail System	Maximum Dimensions	Bracket Type	Infill Type	Support Post	Code Occupancy Classification[(1)]
Trex® Signature® Railing System	96 inches by 42 inches	Standard or Crossover	3/4 in Square Vertical Or, 3/4 in Round Vertical	2.5-inch aluminum post and anchorage to wood deck[(2)]	IRC One- and Two-Family Dwellings
Trex® Signature® Rod Railing System	96 inches by 42 inches	Standard	Round Horizontal		
Trex® Signature® Glass Railing System	72 inches by 42 inches	Standard or Crossover	1/4 inch thick Tempered Glass	2.5-inch aluminum post and anchorage to rigid supporting structure	
Trex® Signature® Mesh Railing System	96 inches by 42 inches	Standard or Crossover	Stainless Steel Mesh[(4)]		
Trex® Signature® Railing System	96 inches by 42 inches	Standard	3/4 in Square Vertical Or, 3/4 in Round Vertical	Aluminum post with min. wall thickness 0.125” designed to support 400 lb. design load from top rail. (See Note 3)	IBC All Use Groups
Trex® Signature® Rod Railing System	96 inches by 42 inches	Standard	Round Horizontal		
Trex® Signature® Mesh Railing System	96 inches by 42 inches	Standard or Crossover	Stainless Steel Mesh[(4)]		

[(1)] Guardrails are qualified up to and including the listed maximum guardrail system dimensions for use in the referenced Code Occupancy Classification. Guardrail lengths are actual railing lengths (clear space between supports). Guardrail height is from the walking surface to top of top rail.

[(2)] The 2.5-inch aluminum post attachment to surface of wood deck must be in accordance with the wood deck support blocking as depicted in Figure 13. Decking shall be *Trex® Transcend®* or *Trex® Select* deck boards (solid or grooved), *Trex® Enhance®* (solid or grooved) and Trex® Signature® deck boards as described in Intertek CCRR-0301, or decking equivalent in compressive strength.

[(3)] For installations in any use group under the IBC, Guards shall be attached to and supported by structural aluminum designed in accordance with IBC Chapter 16 and the Aluminum Design Manual, ADM-2015. Design, fabrication and installation of the railing system supports are outside the scope of this evaluation.

[(4)] Stainless steel mesh consists of 0.188 in. diameter 316 stainless steel mesh infill, 4 in. square center-to-center spacing throughout and 4 in. wide by 3 in. tall center-to-center spacing on top and bottom

TABLE 3 – *TREX® SIGNATURE®* RAILING FASTENER SCHEDULE

Connection	Fasteners
Top Rail Standard Bracket to Post	Three #10-16 by 5/8 in. (0.133 in minor diameter) pan head, self-drilling, stainless steel screws
Top Rail Side Mount Bracket to Post	Three #10-16 by 5/8 in. (0.133 in minor diameter) pan head, self-drilling, stainless steel screws
Top Rail Side Mount Bracket to Rail	Two #10-16 by 1 in. (0.133 in minor diameter) pan head, self-drilling, stainless steel screws
Top Rail Crossover Bracket to Post	Expansion wedge anchor (See Figure 10).
Bottom Rail Bracket to Post	Two #10-16 by 5/8 in (0.133 in minor diameter) pan head, self-drilling, stainless steel screws
Top Rail Standard Bracket to Rail	Two #10-16 by 5/8 in (0.133 in minor diameter) pan head, self-drilling, stainless steel screws
Top Rail Crossover Bracket to Rail	Two #10-16 by 5/8 in (0.133 in minor diameter) pan head, self-drilling, stainless steel screws
Bottom Rail Bracket to Rail	One #10-16 by 5/8 in (0.133 in minor diameter) pan head, self-drilling, stainless steel screw
Infill to Top and Bottom Rails	Insert into routing

TABLE 4 – *TREX® SIGNATURE® ROD* RAILING FASTENER SCHEDULE

Connection	Fasteners
Top Rail Standard Bracket to Post	Three #10-16 by 5/8 in. (0.133 in minor diameter) pan head, self-drilling, stainless steel screws
Top Rail Side Mount Bracket to Post	Three #10-16 by 5/8 in. (0.133 in minor diameter) pan head, self-drilling, stainless steel screws
Top Rail Side Mount Bracket to Rail	Two #10-16 by 1 in. (0.133 in minor diameter) pan head, self-drilling, stainless steel screws
Top Rail Crossover Bracket to Post	Expansion wedge anchor (See Figure 10).
Bottom Rail Bracket to Post	Two #10-16 by 5/8 in (0.133 in minor diameter) pan head, self-drilling, stainless steel screws
Top Rail Standard Bracket to Rail	Two #10-16 by 5/8 in (0.133 in minor diameter) pan head, self-drilling, stainless steel screws
Top Rail Crossover Bracket to Rail	Two #10-16 by 5/8 in (0.133 in minor diameter) pan head, self-drilling, stainless steel screws
Bottom Rail Bracket to Rail	One #10-16 by 5/8 in (0.133 in minor diameter) pan head, self-drilling, stainless steel screw
Center Baluster to Top and Bottom Rail	Two #8-14 by 1-1/4 in (0.115 in minor diameter) pan head, stainless steel screws at each end

TABLE 5 – *TREX® SIGNATURE® MESH* RAILING FASTENER SCHEDULE

Connection	Fasteners
Top Rail Standard Bracket to Post	Three #10-16 by 5/8 in. (0.133 in minor diameter) pan head, self-drilling, stainless steel screws
Top Rail Side Mount Bracket to Post	Three #10-16 by 5/8 in. (0.133 in minor diameter) pan head, self-drilling, stainless steel screws
Top Rail Side Mount Bracket to Rail	Two #10-16 by 1 in. (0.133 in minor diameter) pan head, self-drilling, stainless steel screws
Top Rail Crossover Bracket to Post	Expansion wedge anchor (See Figure 10).
Bottom Rail Bracket to Post	Two #10-16 by 5/8 in (0.133 in minor diameter) pan head, self-drilling, stainless steel screws
Top Rail Standard Bracket to Rail	Two #8-15 by 1-1/4 in (0.133 in minor diameter) pan head, self-drilling, stainless steel screws
Top Rail Crossover Bracket to Rail	Two #8-15 by 1-1/4 in (0.133 in minor diameter) pan head, self-drilling, stainless steel screws
Bottom Rail Bracket to Rail	Secured with a 3/4 in square adhesive strip
Infill to Top and Bottom Rails	Slip fit into respective insert
Center Baluster to Top and Bottom Rail	Plastic angle connects the support baluster to the top/bottom rail; the angle is compression fit into the baluster and attached to the top/bottom rail with one #8-18 by 5/8 in (0.115 in minor diameter) trim head, stainless steel screw

TABLE 6 – *TREX® SIGNATURE® GLASS* RAILING FASTENER SCHEDULE

Connection	Fasteners
Top Rail Standard Bracket to Post	Three #10-16 by 5/8 in. (0.133 in minor diameter) pan head, self-drilling, stainless steel screws
Top Rail Side Mount Bracket to Post	Three #10-16 by 5/8 in. (0.133 in minor diameter) pan head, self-drilling, stainless steel screws
Top Rail Side Mount Bracket to Rail	Two #10-16 by 1 in. (0.133 in minor diameter) pan head, self-drilling, stainless steel screws
Top Rail Crossover Bracket to Post	Expansion wedge anchor (See Figure 10).
Bottom Rail Bracket to Post	Two #10-16 by 5/8 in (0.133 in minor diameter) pan head, self-drilling, stainless steel screws
Top Rail Standard Bracket to Rail	Two #8-15 by 1-1/4 in (0.133 in minor diameter) pan head, self-drilling, stainless steel screws
Top Rail Crossover Bracket to Rail	Two #8-15 by 1-1/4 in (0.133 in minor diameter) pan head, self-drilling, stainless steel screws
Bottom Rail Bracket to Rail	Secured with a 3/4 in square adhesive strip
Infill to Top and Bottom Rails	Slip fit into respective insert

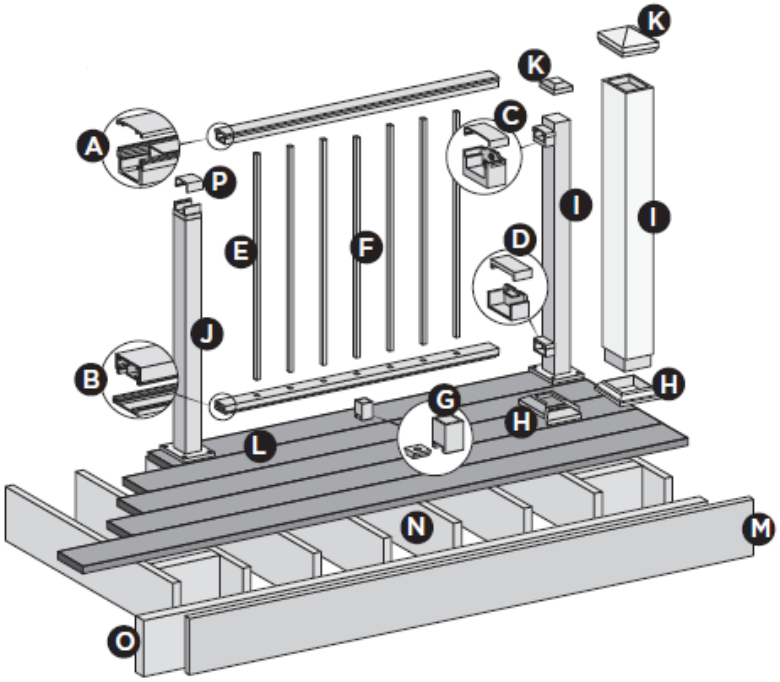

FIGURE 1 – TREX® SIGNATURE®

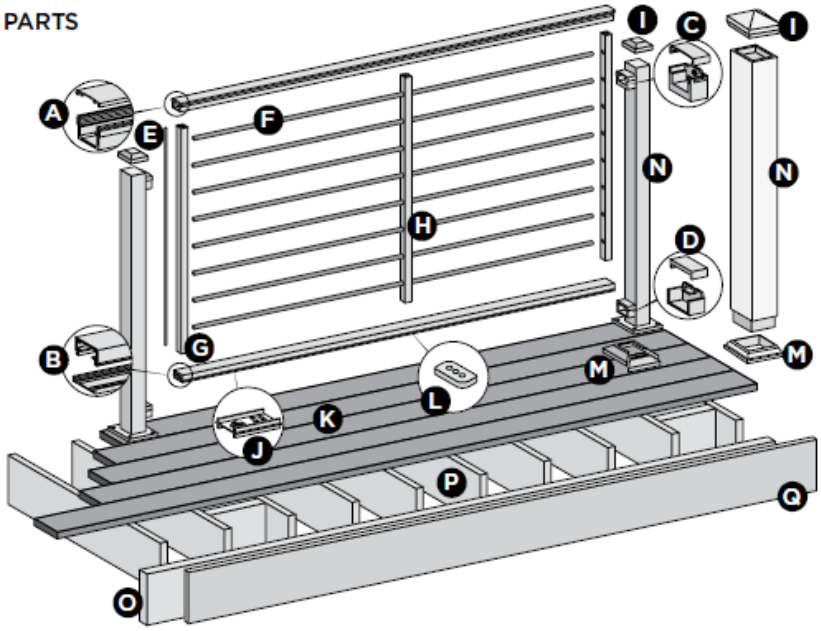

FIGURE 2 – TREX® SIGNATURE® ROD

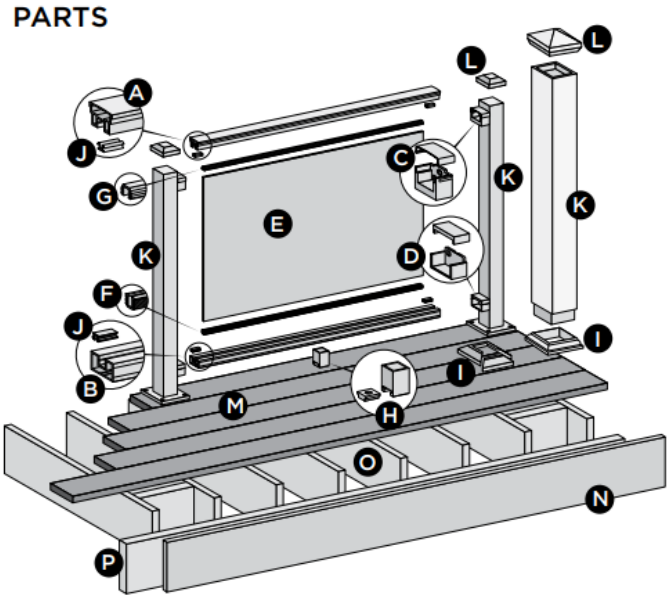

FIGURE 3 – TREX® SIGNATURE® GLASS

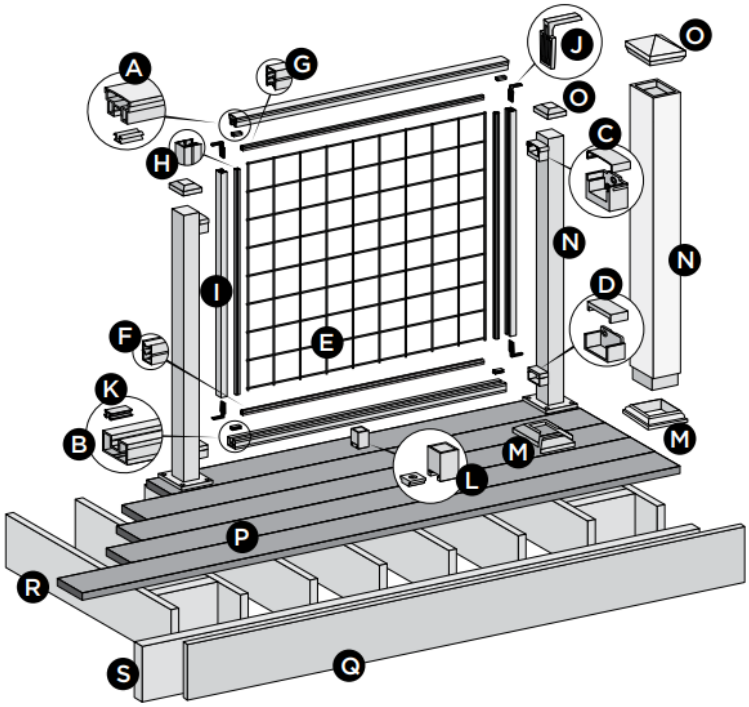

FIGURE 4 – TREX® SIGNATURE® MESH

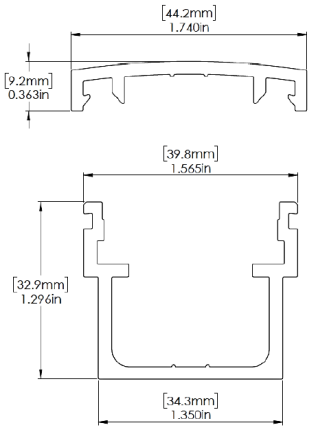

TOP RAIL AND CAP

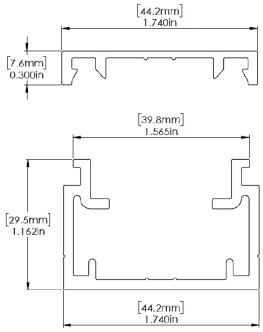

BOTTOM RAIL AND CAP

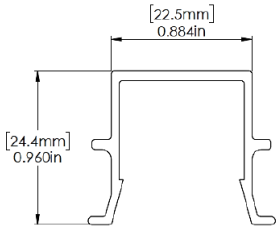

PVC RAIL INSERT

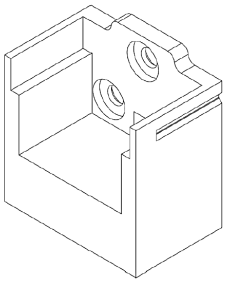

TOP MOUNT BRACKET

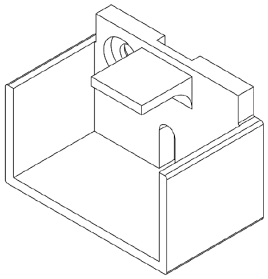

BOTTOM MOUNT BRACKET

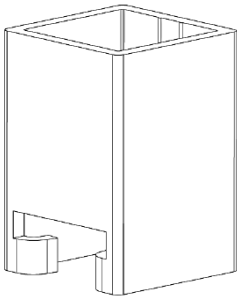

FOOT BLOCK

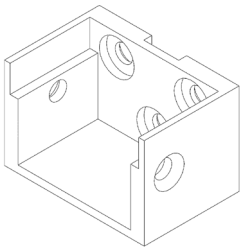

TOP MOUNT BRACKET – SIDE MOUNT

FIGURE 5 – TREX® SIGNATURE® RAILING SYSTEM COMPONENTS

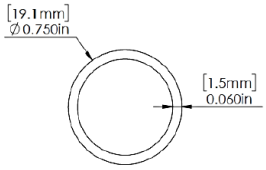

0.75” ROUND BALUSTER

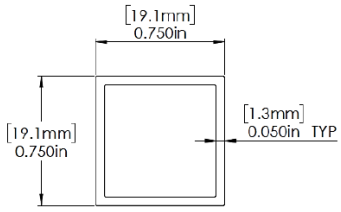

0.75” SQUARE BALUSTER

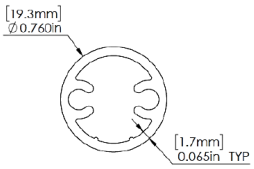

0.75” ROUND PINNED CENTER BALUSTER

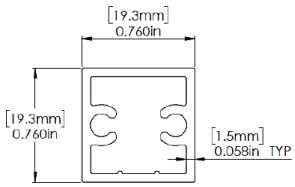

0.75” SQUARE PINNED CENTER BALUSTER

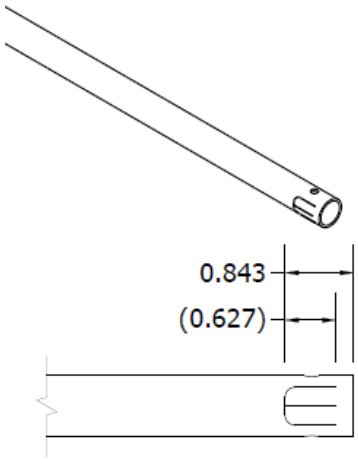

0.75” ROUND FLARED CENTER BALUSTER

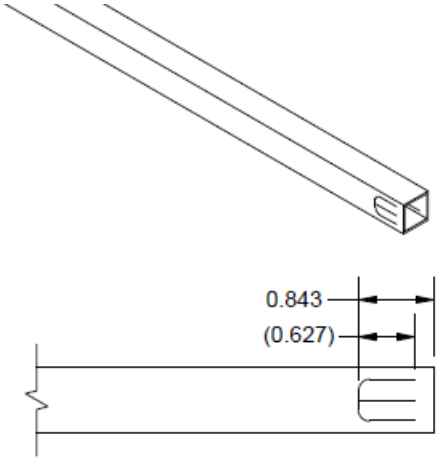

0.75” SQUARE FLARED CENTER BALUSTER

FIGURE 5 – TREX® SIGNATURE® RAILING SYSTEM COMPONENTS (CONTINUED)

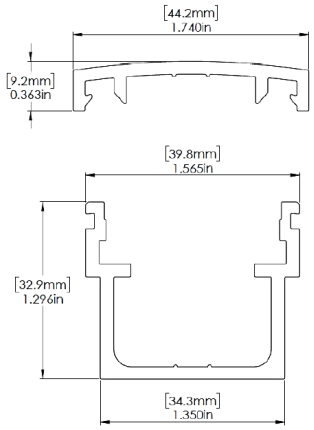

TOP RAIL AND CAP

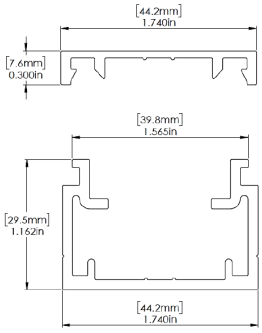

BOTTOM RAIL AND CAP

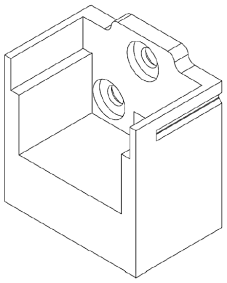

TOP MOUNT BRACKET

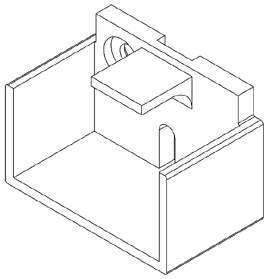

BOTTOM MOUNT BRACKET

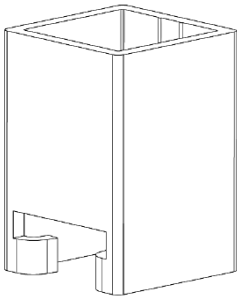

FOOT BLOCK

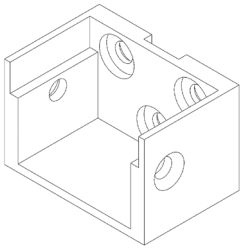

TOP MOUNT BRACKET – SIDE MOUNT

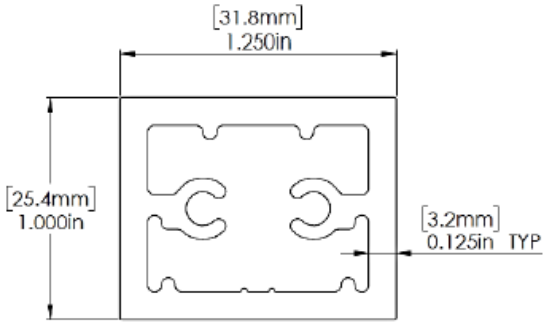

ROD RAIL VERTICAL UPRIGHT

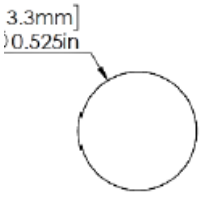

ROD HORIZONTAL RAIL ROD

FIGURE 6 – TREX® SIGNATURE® ROD RAILING SYSTEM COMPONENTS

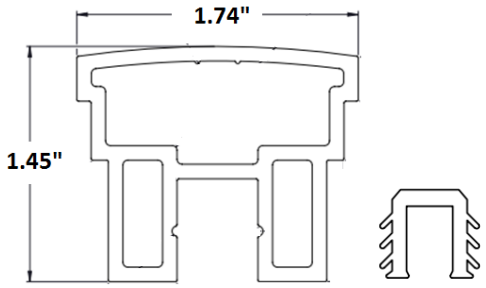

TOP RAIL

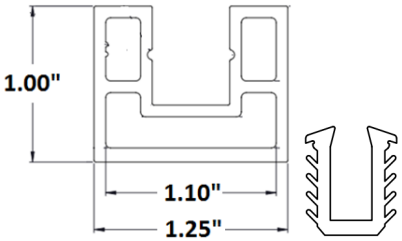

BOTTOM RAIL

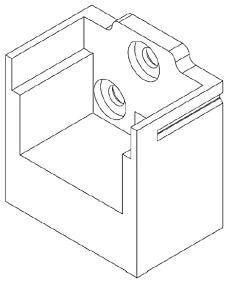

TOP MOUNT BRACKET

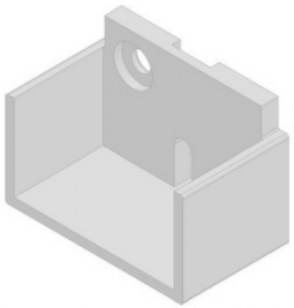

BOTTOM MOUNT BRACKET

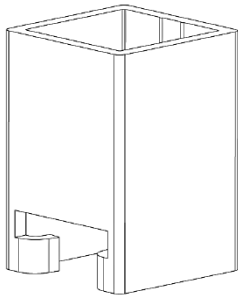

FOOT BLOCK

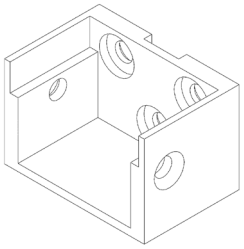

TOP MOUNT BRACKET – SIDE MOUNT

FIGURE 7 – TREX® SIGNATURE® GLASS RAILING SYSTEM COMPONENTS

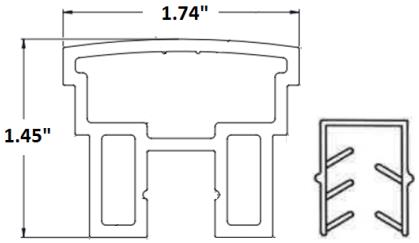

TOP RAIL

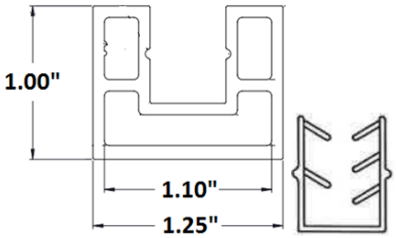

BOTTOM RAIL

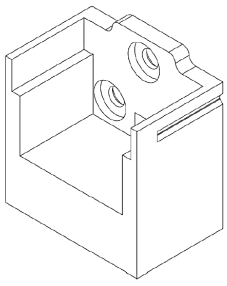

TOP MOUNT BRACKET

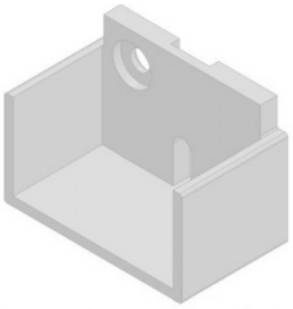

BOTTOM MOUNT BRACKET

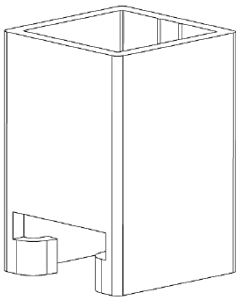

FOOT BLOCK

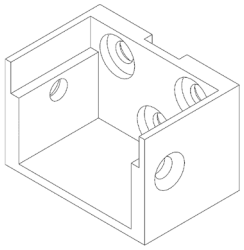

TOP MOUNT BRACKET – SIDE MOUNT

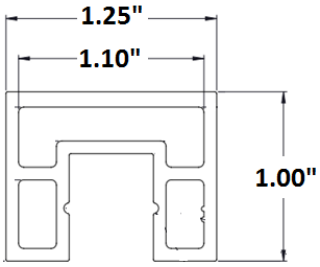

VERTICAL RAIL EXTRUSION

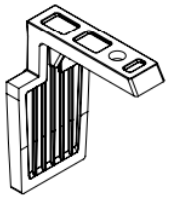

PLASTIC ANGLE CONNECTOR

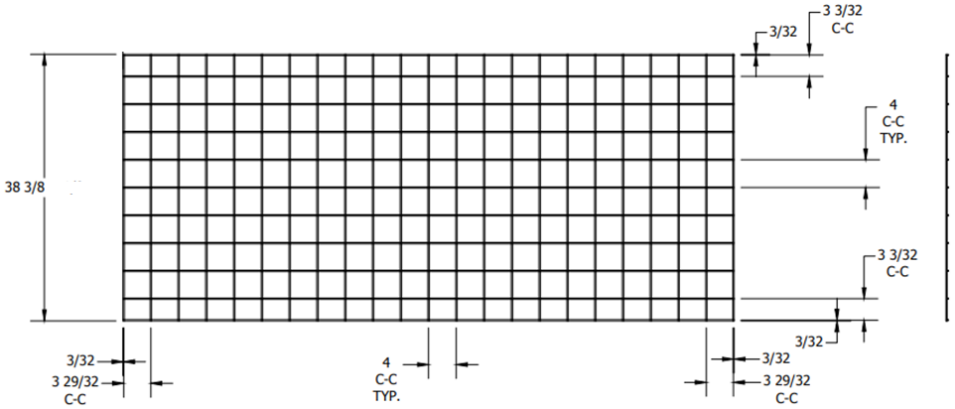

FIGURE 8 – TREX® SIGNATURE® MESH RAILING SYSTEM COMPONENTS

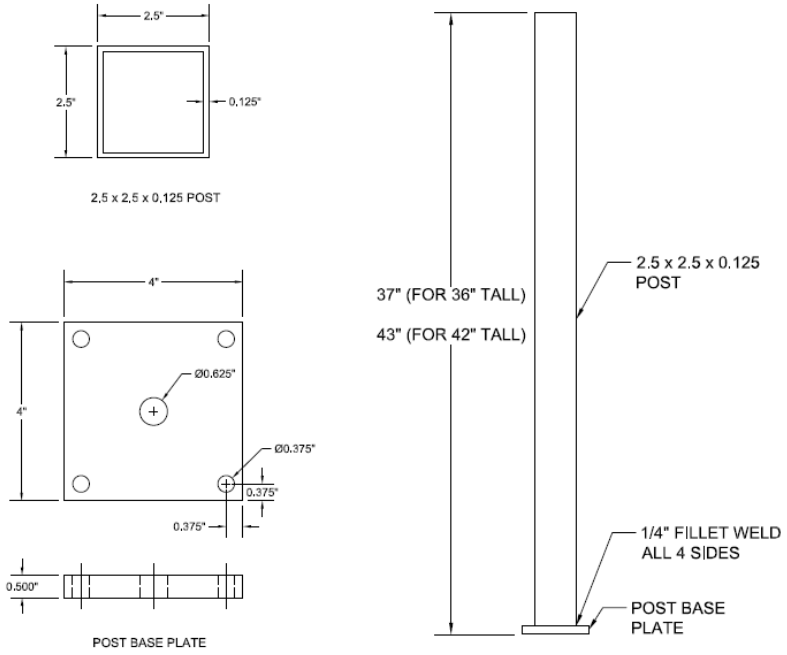

FIGURE 9 – 2.5 INCH SQUARE ALUMINUM SUPPORT POST

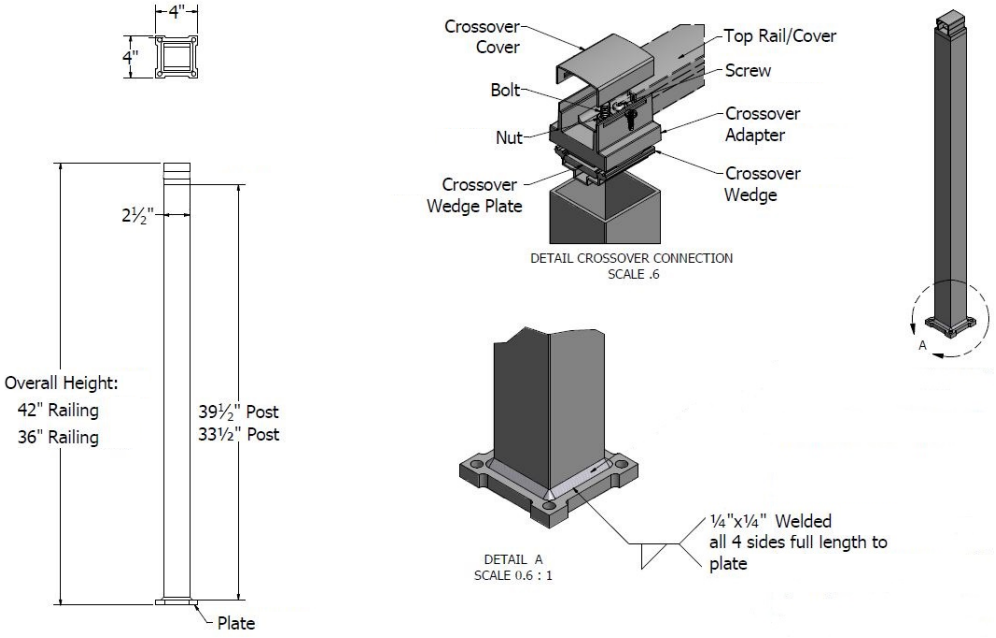

FIGURE 10 – TREX® CROSSOVER POST ASSEMBLY

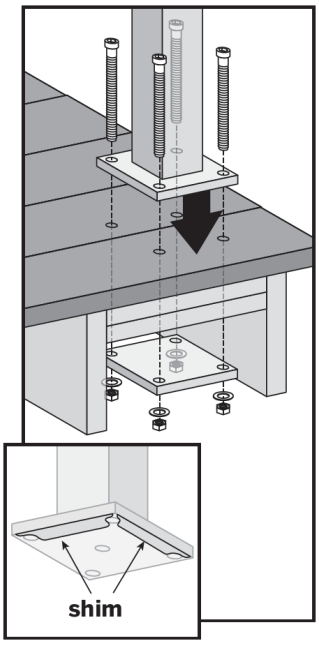

Wood Deck Install Detail

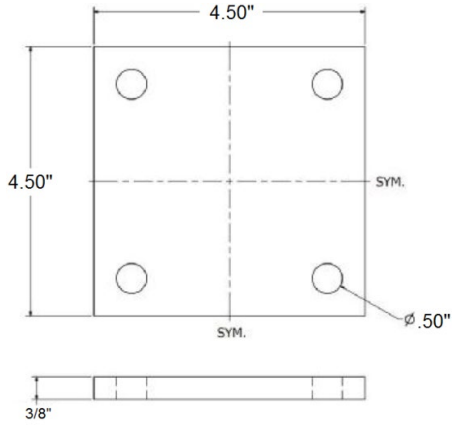

Aluminum Back Plate

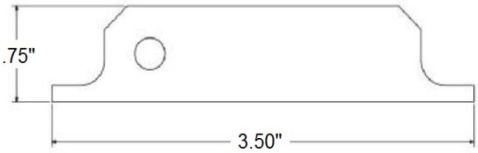

Stainless Steel Shim Plates

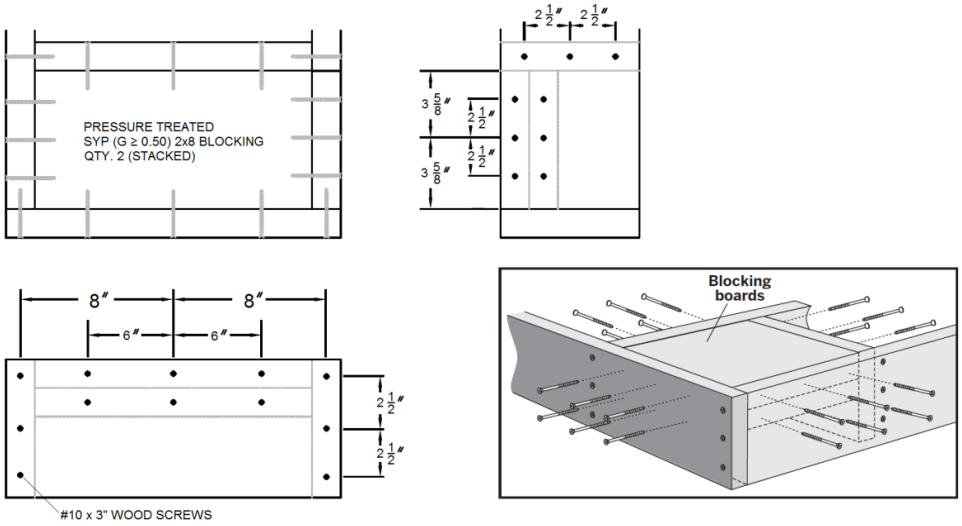

Wood Blocking Detail

FIGURE 11 – POST MOUNT INSTALLATION ON WOOD DECK