Code Compliance Research Report
CCRR-0224

Issue Date: 06-18-2015
Revision Date: 02-02-2026
Renewal Date: 01-31-2027

DIVISION: 05 00 00 – METALS
Section: 05 40 00 – Cold-Formed Metal Framing
Section: 05 41 00 – Structural Metal Stud Framing
Section: 05 42 00 – Cold-Formed Metal Joist
DIVISION: 09 00 00 – FINISHES
Section: 09 22 16 – Nonstructural Metal Framing

REPORT HOLDER:
STEEL FRAMING INDUSTRY ASSOCIATION
513 WEST BROAD STREET, SUITE 210
FALLS CHURCH, VIRGINIA 22046
(703) 538-1602
www.steelframingassociation.org

ADDITIONAL LISTEES:

CALIFORNIA EXPANDED METAL PRODUCTS COMPANY (CEMCO)
13191 CROSSROADS PARKWAY NORTH SUITE 325
CITY OF INDUSTRY, CA 91746
(626) 369-3564
www.cemcosteel.com

CGK, INC. DBA PREMIER STEEL FABRICATION
10811 RUSH STREET
SOUTH EL MONTE, CA 91733
(626) 444-2649
http://www.premiersteelfabrication.com

CLARKDIETRICH™ BUILDING SYSTEMS
9050 CENTRE POINTE DR., SUITE 400
WEST CHESTER, OH 45069
(513) 870-1100
www.clarkdietrich.com

DELUXE BUILDING PRODUCTS LLC
1350 EAST LEXINGTON AVE.,
POMONA, CA 91766
(909) 342-2353
www.deluxebuildingproducts.com

FRAMESTEEL
8625 OTIS STREET
SOUTH GATE, CA 90280
323-923-4900
www.framesteel.com

FRAMETEK STEEL PRODUCTS INC.
1495 COLUMBIA AVE, BUILDING 4
RIVERSIDE, CA 92507
(951) 369-5204
www.frametek steel.com

J AND S LIVONIA, INC. DBA JAIMES INDUSTRIES
12658 RICHFIELD COURT
LIVONIA, MI 48150
(734) 793-9000
www.JaimesInd.com

MBA BUILDING SUPPLIES
2200 TEMPEL DRIVE
LIBERTYVILLE, IL 60048
(847) 680-7773
www.mbastuds.com

MILL STEEL FRAMING
2905 LUCERNE DRIVE SE
GRAND RAPIDS, MI 49546
(812) 670-4195
www.millsteelframing.com

PANEL REY S.A.
SERAFÍN PEÑA SUR 938, CENTRO
MONTERREY, NUEVO LEÓN, MÉXICO 66560
+81-8305-3800
www.panelrey.com

R & P SUPPLY, INC
2642 E LONE MOUNTAIN ROAD
NORTH LAS VEGAS, NV 89081
(702) 400-8539
http://rpsupplyinc.com

STEELFAST FRAMING SYSTEMS
575 INDUSTRIAL PARKWAY
GREENVILLE, ALABAMA 36037
334-383-0333

REPORT SUBJECT:
Standard Cold-Formed Steel Framing Members

1.0 SCOPE OF EVALUATION

1.1. This research report addresses compliance with the following Codes:

- 2024, 2021,and 2018 *International Building Code®* (IBC)
- 2024, 2021, and 2018 *International Residential Code®* (IRC)
- 2023 and 2020 *Florida Building Code - Building* (FBC-B) (see Section 8.1)
- 2023 and 2020 *Florida Building Code - Residential* (FBC-R) (see Section 8.1)
- 2025 and 2022 *California Building Code* (CBC) (see Section 8.2)
- 2025 and 2022 *California Residential Code* (CRC) (see Section 8.2)
- 2023 *City of Los Angeles Building Code* (see section 8.3)

1.2. NOTE: This report references 2018 IBC Code sections with [2015] IBC Code sections shown in brackets where they differ. Standard Cold-Formed Steel Framing Members have been evaluated for the following properties:

- Structural
- Corrosion protection

1.3. Cold-formed steel framing members (studs, tracks, and U-channels) recognized in this report are used for framing of nonload-bearing interior walls, curtain walls, load-bearing walls, floor joists, headers, roof rafters and roof trusses.

2.0 STATEMENT OF COMPLIANCE

Cold-formed steel framing members comply with the Codes listed in Section 1.1, for the properties stated in Section 1.2 and uses stated in Section 1.3, when installed as described in this report, including the Conditions of Use stated in Section 6.

2.1 2024 IBC and IRC Evaluation Reports

The Intertek CCRR is an *Evaluation Report* for approval of an alternate material, design, or method of construction in accordance with Section 104.2.3.6.1 of the 2024 IBC and Section R104.2.2.6.1 of the 2024 IRC.

3.0 DESCRIPTION

3.1. Materials

3.1.1. Non-structural steel framing members are cold-formed from steel coils conforming to ASTM A 1003 Non-Structural Grade, Type NS. Non-structural members have a minimum protective coating of G40 galvanization conforming to ASTM A 653.

3.1.2. Structural steel framing members are cold-formed from steel coils conforming to ASTM A 1003 Structural Grade 33 Type H and Structural Grade 50 Type H. Structural members have a minimum protective coating in accordance with Table A4-1 CP 60 as listed in AISI S240 [Table 1, CP 60 as listed in ASTM C 955.]

3.2. Studs are manufactured with and without factory web punchouts. Web punchout holes are spaced a minimum of 24 inches on center along the stud length and shall not be located less than 10 inches from the end of the member to the near edge of the web punchout. Web punch-out widths shall not exceed 2.5 inches, or half of the member depth. Web punch-out length shall not exceed 4.5 inches. Tracks and U-channels are manufactured without web punch-outs.

3.3. See page 2 of the SFIA Technical Guide for Cold-Formed Steel Framing Products for member designations**.**

4.0 PERFORMANCE CHARACTERISTICS

4.1. Reference the SFIA Technical Guide for Cold-Formed Steel Framing Products (attached) for section properties in accordance with AISI S100 and design capacities and tables established in accordance with AISI S220 and, AISI S240, where only the following pages are within the scope of this report:

4.1.1. General Product Information on pages 7-9.

4.1.2. Non-Structural Stud, Structural Stud, and Track Section Properties on pages 10-22.

4.1.3. Limiting Wall Heights Tables for Interior Non-Structural Non-Composite on pages 27-30.

4.1.4. Limiting Wall Height Tables for Interior Non-Structural Composite on pages 24-26. Gypsum wall board must be a minimum of 5/8" thick and Type X, complying with ASTM C1396 and manufactured by American Gypsum, CertainTeed, Georgia Pacific, Lafarge, National Gypsum, Temple-Inland, or USG. The interior nonload-bearing wall assemblies shall be limited to interior installations where the superimposed axial load is zero pounds.

4.1.5. Limiting Wall Heights Tables for Curtain Wall Single-Span on pages 31-40.

4.1.6. Combined Axial and Lateral Allowable Load Tables on pages 41-65

4.1.7. Allowable Floor Joist Span Tables on pages 66-71.

4.1.8. Header Allowable Load Tables on pages 72-75. Lateral bracing of the compression flange shall be spaced at intervals not exceeding L_u (see section properties) to develop full allowable bending strength, M_a.

4.1.9. Allowable Web Crippling Load Tables on pages 76-80.

4.1.10. Channel Section Properties on pages 81-84. Allowable moments (M_a) apply to flexural members with the compression flange continuously braced.

4.2. For construction governed by the FBC High Velocity Hurricane Zone (HVHZ), the interior wall heights are limited to the heights at the L/240 and L/360 deflection levels.

5.0 CONDITION OF USE

The cold-formed steel framing members described in this Research Report comply with, or is a suitable alternative to, what is specified in those Codes listed in Sections 1.0 and 2.0 of this report, subject to the following conditions:

5.1. Installation must comply with this Research Report, the manufacturer's published installation instructions and the applicable Code. In the event of a conflict between the manufacturer's instructions and this report, this report governs.

5.2. All designs and calculations shall be prepared by a licensed design professional according to the requirements in the jurisdiction where the project is located.

5.3. Jobsite manufacturing of studs or tracks is outside the scope of this report.

5.4. Wall assemblies based upon non-composite construction, pages 17-19 of the attached SFIA Technical Guide, are limited to a lateral (transverse) load of not more than 10 lb/ft^2, a superimposed vertical load, exclusive of sheathing materials, of not more than 100 lbf/ft, or a superimposed vertical load of not more than 200 lbs per stud.

5.5. The minimum base steel thickness of the section delivered to the jobsite must be 95% of the design thickness noted on page 3 of the SFIA Technical Guide for Cold-Formed Steel Framing Products.

5.6. Cold-Formed steel framing members identified in this report are manufactured at the manufacturing facilities recognized in Table 2 in accordance with the manufacturer's approved quality control system with inspections by Intertek.

6.0 SUPPORTING EVIDENCE

6.1. Manufacturer's drawings and installation instructions.

6.2. Steel Framing Industry Association Technical Guide for Cold-Formed Steel Framing Products, Version 2026.1.7 published January 2026.

6.3. Reports of testing and engineering analysis demonstrating compliance with ICC-ES AC46, *Acceptance*

Criteria for Cold-formed Steel Framing Members, approved October 2019 (editorially revised December 2020).

6.4. Reports of evaluation and engineering analysis in accordance with AISI S100-16, North American Specification for the Design of Cold-Formed Steel Structural Members.

6.5. Reports of testing and engineer analysis demonstrating compliance with ICC-ES AC86, Acceptance Criteria for Cold-Formed Steel Framing Members - Interior Nonload-Bearing Wall Assemblies, approved June 2019 (editorially revised October 2021).

6.6. Documentation of an Intertek approved quality control system for the manufacturing of products recognized in this report.

7.0 IDENTIFICATION

The Standard Cold-Formed Steel Framing Members described in this Research Report are identified with labeling at a maximum of 96 inches that includes the following information:

7.1. Manufacturer's name, logo, or other positive identification;

7.2. For structural steel framing members: framing member designation, uncoated metal thickness, yield strength, and galvanization coating designation, CP60

7.3. For non-structural steel framing members: framing member designation, uncoated metal thickness, yield strength if other than 33 ksi, galvanization coating if other than G40, and designation "NS".

7.4. Intertek designation and Code Compliance Research Report number (Intertek CCRR-0224)

7.5. Bundles of like members shall be identified with the, manufacturer's name, length of product, quantity of product, uncoated metal thickness, yield strength, galvanization coating, and Intertek identification mark and Code Compliance Research Report number as shown:



8.0 OTHER CODES

8.1. FLORIDA BUILDING CODE

8.1.1. Scope of Evaluation: The Standard Cold-Formed Steel Framing Members were evaluated for compliance with the 2023 and 2020 *Florida Building Code – Building and Florida Building Code – Residential.*

8.1.2. Conclusion: The Standard Cold-Formed Steel Framing Members, described in Sections 2.0 through 7.0 of this Research Report, comply with the 2023 and 2020 *Florida Building Code – Building* and *Florida Building Code – Residential*, including the High-Velocity Hurricane Zone provisions.

8.2. CALIFORNIA BUILDING CODE

***8.2.1.* Scope of Evaluation:** The Standard Cold-Formed Steel Framing Members were evaluated for compliance with the 2025 and 2022 *California Building Code* and *California Residential Code.*

8.2.2. Conclusion: The Standard Cold-Formed Steel Framing Members, described in Sections 2.0 through 7.0 of this Research Report, comply with the 2025 and 2022 *California Building Code* and *California Residential Code*.

8.3. CITY OF LOS ANGELES BUILDING CODE

***8.3.1.* Scope of Evaluation:** The Standard Cold-Formed Steel Framing members were evaluated for compliance with the 2023 *City of Los Angeles Building Code* and *City of Los Angeles Residential Code*.

8.3.2. Conclusion: The Standard Cold-Formed Steel Framing Members, described in Sections 2.0 through 7.0 of this Research Report, complies with the *City of Los Angeles Build Code,* and *City of Los Angeles Residential Code* for the editions indicated in Section 1.1 of this report.

9.0 CODE COMPLIANCE RESEARCH REPORT USE

9.1. Approval of building products and/or materials can only be granted by a building official having legal authority in the specific jurisdiction where approval is sought.

9.2. Code Compliance Research Reports shall not be used in any manner that implies an endorsement of the product by Intertek.

9.3. Reference to the Intertek web site, https://bpdirectory.intertek.com is recommended to ascertain the current version and status of this report.

Table 1 – Code Referenced Standards

2024 and 2021 IBC [2018 IBC]		2023 FBC [2020 FBC]		2025, 2022 CBC and 2023 LABC	
Structural members	Nonstructural members	Structural members	Nonstructural members	Structural members	Nonstructural members
AISI S100-16(2020) w/S2-20 [AISI S100-16] AISI S240-20 [AISI S240-15]	AISI S100-16(2020) w/S2-20 [AISI S100-16] AISI S220-20 [AISI S220-15]	AISI S100-16(2020) w/S2-20 [AISI S100-16] AISI S240-20 [AISI S240-15]	AISI S100-16(2020) w/S2-20 [AISI S100-16] AISI S220-20 [AISI S220-15]	AISI S100-16(2020) w/S2-20 AISI S240-20	AISI S100-16(2020) w/S2-20 AISI S220-20

This Code Compliance Research Report ("Report") is for the exclusive use of Intertek's Client and is provided pursuant to the agreement between Intertek and its Client. Intertek's responsibility and liability are limited to the terms and conditions of the agreement. Intertek assumes no liability to any party, other than to the Client in accordance with the agreement, for any loss, expense or damage occasioned by the use of this Report. Only the Client is authorized to permit copying or distribution of this Report and then only in its entirety, and the Client shall not use the Report in a misleading manner. Client further agrees and understands that reliance upon the Report is limited to the representations made therein. The Report is not an endorsement or recommendation for use of the subject and/or product described herein. This Report is not the Intertek Listing Report covering the subject product and utilized for Intertek Certification and this Report does not represent authorization for the use of any Intertek certification marks. Any use of the Intertek name or one of its marks for the sale or advertisement of the tested material, product or service must first be approved in writing by Intertek.

TABLE 2 – MANUFACTURING LOCATIONS

Listee	Location	Structural	Non-Structural
CEMCO	223 North Covina Lane, City of Industry, CA 91746	X	
	9410 Heinz Way, Henderson, CO 80640	X	
	8600 Will Rodgers Boulevard, Fort Worth, TX 76140	X	
	1001 Pittsburg-Antioch Highway, Pittsburg, CA 94565	X	
ClarkDietrich™ Building Systems	6510 General Drive, Riverside, CA 92509		X
	1685 Tide Court, Woodland, CA 95776		X
Deluxe Building Products LLC	1350 East Lexington Ave., Pomona, CA 91766	X	X
Framesteel	8625 Otis Street, South Gate, CA 90280	X	X
Frametek Steel Products	1495 Columbia Avenue, Riverside, CA 92507	X	X
Jaimes Industries	12658 Richfield Court, Livonia, MI 48150	X	X
MBA Building Supplies	2200 Tempel Drive, Libertyville, IL 60048	X	X
	1217 West Grand Ave Rainbow City, AL 35906	X	
	100 Fireman's Rd, Frackville, PA 17931	X	
	10880 Bekay Street, Dallas, TX 75238	X	
Mill Steel Framing	116 Finley Ave W, Birmingham, AL 35204	X	
	555 Gellhorn Dr, Houston, TX 77029	X	
	1195 Port Rd, Jeffersonville, IN 47130	X	X
Panel Rey	Carr. Monterrey-Monclova Km. 11.5, El Carmen, Nuevo León, México 66560	X	X
Premier Steel Fabrication	10811 Rush Street, South El Monte, CA 91733		X
R&P Supply	2642 East Lone Mountain Road, North Las Vegas, NV 89081	X	X
Steelfast Framing Systems	575 Industrial Parkway, Greenville, AL 36037	X	X

PUBLISHED JANUARY 2026

Technical Guide for Cold-Formed Steel Framing Products

The data in this guide is based upon the 2020 American Iron and Steel Institute's S100-16 /S2-20 "North American Specification for the Design of Cold-Formed Steel Structural Members", and meets the requirements of the IBC 2024 Building Code, as well as the 2022 California Building Code and 2020 Florida Building Code.

Copyright © 2026 SFIA.

Complies with the 2024 IBC and AISI S100-16/S2-20

SFIA
STEEL FRAMING INDUSTRY ASSOCIATION

Table of Contents

Introduction **5**
- About this Guide 5
- Material Specification 6
- Disclaimer 6

General Product Information **7**
- Product Identification 7
- Thickness Table 8
- General Notes for all Tables 8
- Stiffening Lip Length 8
- Definitions of Structural Property Symbols 9

Section Properties **10**
- Section Properties Table Notes 10
- Non-Structural (S) Stud Section Properties 11
- Structural (S) Stud Section Properties 12
- (T) Track Section Properties 17
- Members with h/t between 200 and 260 23

Limiting Wall Heights - Composite **24**
- Interior Non-Structural Composite Table Notes 24
- Interior Non-Structural Composite 25

Limiting Wall Heights - Non-Composite **27**
- Interior Non-Structural Non-Composite Table Notes 27
- Interior Non-Structural Non-Composite 28

Limiting Wall Heights - Curtain Wall Single Span **31**
- Wall Height Table Notes 31
- Wall Height 32

Combined Axial and Lateral Load Tables **41**
- Combined Axial and Lateral Load Table Notes 41
- 5 psf Lateral Load (Interior Walls Only) 42
- 15 psf Lateral Load 45
- 20 psf Lateral Load 48
- 25 psf Lateral Load 51
- 30 psf Lateral Load 54
- 35 psf Lateral Load 57
- 40 psf Lateral Load 60
- 50 psf Lateral Load 63

Floor and Roof Joist Span Tables 66
Allowable Floor and Roof Joist Span Table Notes 66
Allowable Uniform Load Table (plf) - Simple Span Joists 67
Allowable Uniform Load Table (plf) - Simple Span Joists 69

Header Load Tables 72
Header Load Table Notes 72
Header Allowable Uniform Loads (lb/ft) 73

Web Crippling Load Tables 76
Web Crippling Load Table Notes 76
Web Crippling Conditions 76
Allowable Web Crippling Loads (lbs) - Single Members 77
Allowable Web Crippling Loads (lbs) - Back-to-Back Members 79

Channel Properties 81
U-Channel Section Properties 81
U-Channel Allowable Ceiling Spans L/360 81
U-Channel Allowable Ceiling Spans L/240 81
U-Channel Allowable Ceiling Spans L/120 82
(Hat) Furring (F) Channel Section Properties 83
(Hat) Furring (F) Channel Allowable Ceiling Spans L/360 83
(Hat) Furring (F) Channel Allowable Ceiling Spans L/260 84
(Hat) Furring (F) Channel Allowable Ceiling Spans L/120 84

Fasteners (Screws and Welds) 85
Screw Table Notes 85
Allowable Screw Shear and Tension Capacities (lb) 85
Weld Table Notes 86
Allowable Weld Capacity (Pounds) for 1-inch Long Welds 86

Example Details 87
Stud Bracing with Cold-Rolled Channel 87
Stud Bridging with Strap and Blocking 88
Floor Blocking Detail 90
Box Header to Jamb 91
Boxed Header 92
Web Stiffener at Continuous Joist 93
Web Stiffener at Load Bearing Wall 94
Two Story X-Brace 95
Curtain Wall Spandrel Panel 96

Additional Technical Resources 97

Fire Rated Assemblies 99

Steel Framing: Supporting Your Green Vision

Steel framing has a great environmental story to tell. As an architect, engineer, or specifier, you can feel GREAT about specifying steel framing on your next project.

For more information, go to steel.org/sustainability

- **Local sourcing:** more than 80% of the steel studs and tracks produced in North America come from steel that is recycled/mined/melted in North America. And 70% of the steel produced in North America comes from electric arc furnaces: that use more than 90% domestic scrap.
- **Reusability:** Steel framing can be reused indefinitely: and does not have reduced structural capacity over time.
- **Recyclability:** Steel framing is 100% recyclable. And new steel made from old scrap can be just as strong or even stronger than the original steel.
- **Durability:** Steel framing installed in structures over 100 years ago is still in service today.
- **Resilience:** Because of its ductility, strength, and noncombustibility, steel performs well during and after earthquakes, fires, and floods, and will not support the growth of mold or fuel a fire.
- **Adaptability:** reuse of steel-framed structures is common, easy, and straightforward.
- **Plays well with others:** Steel framing won't warp, shrink, or degrade the materials around it, making it a reliable partner in hybrid construction.
- **Non-combustibility:** Steel will not fuel a fire, period.

Although many practitioners think specifying more bio-based materials automatically reduces a building's carbon footprint, this is not always the case. Make sure your LCA inputs include a true cradle-to-cradle analysis, with data on the full carbon impacts of harvesting, including the bio material left in the forest, and effects of dimensional stability on the building envelope.

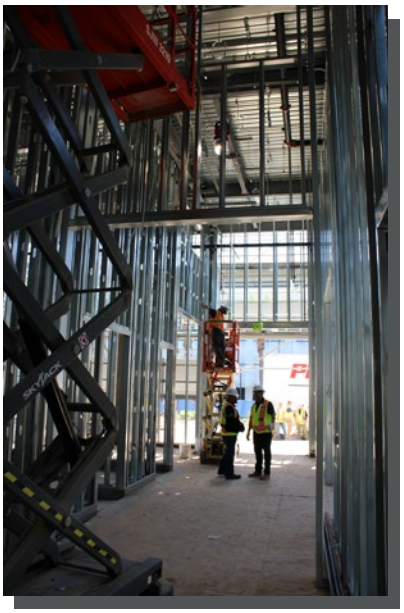

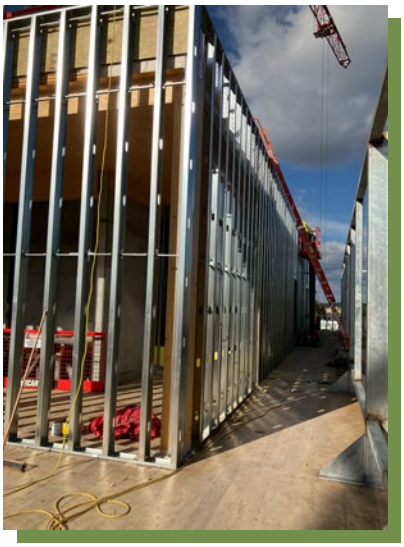



Introduction

About this Guide

The Steel Framing Industry Association (SFIA) was formed with the objective of assisting companies having interests in the cold-formed steel framing industry to be more successful by unifying the industry to expand the market for the use of cold formed steel systems through:

- Quality Assurance
- Promotion
- Advocacy
- Education
- Innovation

The SFIA developed this Industry leading product technical guide to comply with the latest building codes and standards.

The data in this catalog based on the American Iron and Steel Institure's AISI S100-16/S2-20 "North American Specification for the Design of Cold-Formed Steel Structural Members" and meets the requirements of the 2024 International Building Code (IBC). While building codes vary by jurisdiction, this program follows the most recent international standards published by the International Code Council.

Technical Data in this publication is applicable to the SFIA Member Companies.

For a complete directory of SFIA Members who are certified for compliance with the International Building Code and all applicable ASTM and AISI Standards:

http://www.archtest.com/certification/SFIA_SteelFraming_Intertek.aspx

Copyright © 2026 SFIA

Material Specification

Products manufactured by SFIA members are formed from steel with a minimum yield stress of 33 or 50 kips per square inch (ksi). Unless noted otherwise, all products covered in this SFIA catalog are engineered to meet the 2020 edition of the American Iron and Steel Institute (AISI) S100-16/S2-20, "North American Specification of the Design of Cold-Formed Steel Structural Members" and other AISI standards referenced in Section 2210 of the 2024 International Building Code (IBC-2024). The structural properties in this SFIA catalog have been computed based on allowable stress design (ASD) which includes distortional buckling considerations for all Stud Sections. For fastener tables, screw sizes and head diameters do not refer to specific fasteners which may or may not be available from SFIA member companies. Shear and tension data for screws was developed using published manufacturer data and evaluation reports available at the time of publication.

Disclaimer

A concerted effort has been made to ensure the accuracy of the technical data represented in this catalog. The Steel Framing Industry Association makes no representation, warranty, or guarantee in connection with this technical data and expressly disclaims any liability or responsibility for failure resulting from the use or misapplication of computations, detail drawings and specifications contained herein. All data, specifications and details contained in this catalog publications are intended as a general guide for using SFIA member companies products. These products should not be used in design or construction without an independent evaluation by a qualified engineer or architect to verify the suitability of a particular product for use in a specific application. This publication containes the latest information available at the time of printing. The SFIA and its member companies reserve the right to make modifications and/ or change materials of any of their products without prior notice or obligation. For the latest information regarding a particular manufacturer's products contact that manufacturer. All SFIA manufacturers may not produce all of the products listed in this catalog. Please contact manufacturer to verify product availablity.

Copyright ©2025 Steel Framing Industry Association.

General Product Information

Product Identification

SFIA supports the industry standard nomenclature published in AISI standards S220 section A6.3 and S240 section A5.3. An example of the designator is shown below.

Example:

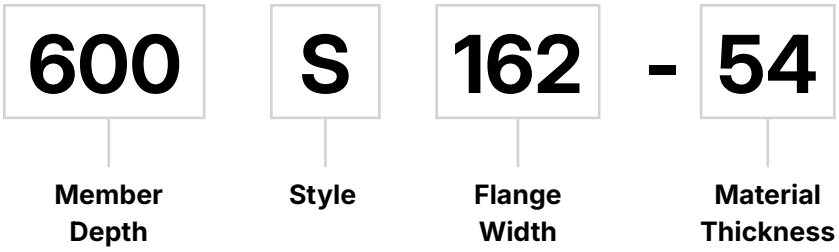

Member Depth:

(Example: 600 = 6" x 1/100 inches)

All member depths are taken in 1/100 inches.

For all "T" Sections, member depth is the inside to inside dimension.

Style:

(Example: Stud or Joist section = S)

The five alpha characters utilized by the designator system are:
S = Stud or Joist Sections
T = Track Sections
U = Channel Sections
F = Furring Channel Sections
L = Angle or L-header

Flange Width:

(Example: 1-5/8" = 1.625" truncated to 162 × 1/100 inches)

All flange widths are taken in 1/100 inches.

Material Thickness:

(Example: 0.054 in = 54 mils; 1 mil = 1/1000 in.)

Material thickness is the minimum base metal thickness in mils. Minimum base metal thickness represents 95% of the design thickness.

NOTE: For Structural members 54 mil (16 gauge) and thicker, that have both 33 and 50 ksi yield strength options shown, the designer shall identify which yield strength they have specified and the manufacturer shall label the product with the yield strength.

Thickness Table

Designation Thickness (Mils)	Minimum Thickness[1] (in)	Design Thickness (in)	Design Inside Corner Radii[2] (in)	Reference Gauge No.
18	0.0179	0.0188	0.0844	25
27	0.0269	0.0283	0.0796	22
30	0.0296	0.0312	0.0782	20-Drywall
33	0.0329	0.0346	0.0765	20-Structural
43	0.0428	0.0451	0.0712	18
54	0.0538	0.0566	0.0849	16
68	0.0677	0.0713	0.1070	14
97	0.0966	0.1017	0.1526	12
118	0.1180	0.1242	0.1863	10

Stiffening Lip Length

Section	Flange Width	Design Stiffening Lip Length (in)
S125	1 1/4"	3/16" (0.188)
S137	1 3/8"	3/8" (0.375)
S162	1 5/8"	1/2" (0.500)
S200	2"	5/8" (0.625)
S250	2 1/2"	5/8" (0.625)
S300	3"	5/8" (0.625)
S350	3 1/2"	1" (1.000)

1 Minimum Thickness represents 95% of the design thickness and is the minimum acceptable thickness delivered to the jobsite based on section B7.1 of the AISI S100-16/S2-20.

2 The tables in this catalog are calculated based on inside corner radii listed in this table.

General Notes for all Tables

1. Where AISI S100-16/S2-20 is referenced, it is the *North American Specification for the Design of Cold-Formed Steel Structural Members*, 2016 Edition (Reaffirmed 2020) With Supplement 2, 2020 Edition, with US provisions. The strength increase from cold work of forming has been incorporated for flexural strength per section A3.3.2 of AISI S100-16/S2-20.
2. The effective moment of inertia for deflection is calculated at a stress which results in a section modulus such that the stress times the section modulus at that stress is equal to the allowable moment. AISI S100-16/S2-20 Specification Procedure 1 for serviceability determination has been used. Increases in the effective moment of Inertia (Ixe) may be possible at lower stress levels. Any modified values would be required to be calculated by a qualified engineer.
3. Various sections may be manufactured with yield points of 33 or 50 ksi. The yield point used for calculations are listed in the tables.
4. For sections available in both 33 and 50 ksi, the specifier must clearly indicate which yield point is required. For ex. 362S162-68 (50ksi).
5. When provided, factory punchouts will be located along the centerline of the webs of the members and will have a minimum center-to-center spacing of 24 inches. Punchouts for members greater that 2.5 inches deep are a maximum of 1.5 inches wide x 4 inches long.

   Members with depths 2.5 inches and smaller are maximum of 3/4 inches wide x 4 inches long.

Definitions of Structural Property Symbols

Gross Properties

Ix: Moment of inertia of gross section about the X-X axis (strong axis).

Sx: Section modulus about the X-X axis (strong axis).

Rx: Radius of gyration of the gross section about the X-X axis.

Iy: Moment of inertia of gross section about the Y-Y axis (weak axis).

Ry: Radius of gyration of the gross section about the Y-Y axis.

Effective Properties

Ixe: Effective moment of inertia about the X-axis.

Sxe: Effective section modulus about the X-X axis (strong axis) stress = Fy.

Ma: Allowable Bending Moment - Based on the effective section modulus and the allowable stress including the strength increase from the cold-work of forming (Section A3.3.2) where applicable.

Mad: Allowable Bending Moment - Based on Distortional Bucking Strength calculated per Sections F4, F4.1 of AISI S100-16/S2-20.

V_{ag}: Allowable strong axis shear away from punchout, calculated in accordance with Section G2 of AISI S100-16/S2-20.

V_{anet}: Allowable strong axis shear at punchout, calculated in accordance with Section G3 of AISI S100-16/S2-20.

Torsional and Other Properties

J: Saint-Venant Torsional Constant.

Cw: Torsional warping constant.

m: Distance from shear center to mid-plane of web.

Xo: Distance from the shear center to the centroid along the principal X-axis.

Ro: Polar radius of gyration about the centroidal principal axis.

b: 1-(Xo/Ro)2

Lu: The longest weak axis (Ly) and torsional (Lt) unbraced length at which lateral torsional buckling is restrained in accordance with Section F2.1 of AISI S100-16/S2-20.

Stud Cross Section

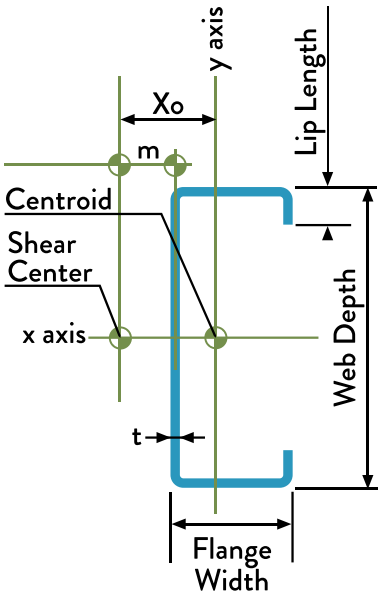

Track Cross Section

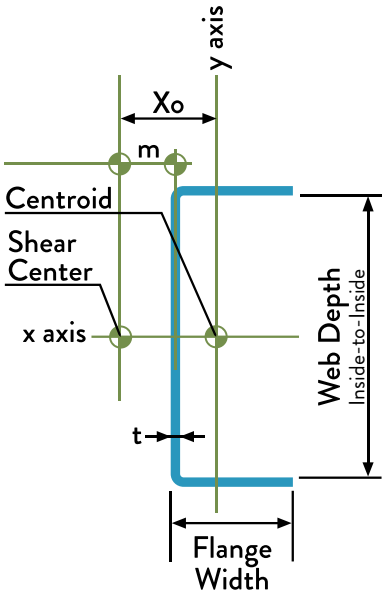

Section Properties

Section Properties Table Notes

1. Calculated properties are based on AISI S100-16/S2-20, *North American Specification for Design of Cold-Formed Steel Structural Members*.
2. The centerline bend radius is based upon inside corner radii shown in the Thickness Table (page 3).
3. Effective properties incorporate the strength increase from the cold-work of forming as applicable per AISI A3.3.2.
4. Tabulated gross properties, including torsional properties, are based upon full-unreduced cross section of the studs, away from punchouts.
5. For deflection calculations, use the effective moment of inertia.
6. Allowable moment includes cold-work of forming.
7. For the steels that have both 33 and 50 ksi listing, if the design is based upon 50 ksi, the 50 ksi steel needs to be specified. (ex. 3.625 S137 16-50 (50 ksi))
8. Web depth for track sections is equal to the nominal stud width plus 2 times the design thickness plus the bend radius. Hems on non-structural rack sections are ignored.



Non-Structural (S) Stud Section Properties

Member	Design Thickness (in)	Fy (ksi)	Gross Properties							Effective Properties						Torsional Properties						
			Area (in^2)	Weight (lb/ft)	I_x (in^4)	S_x (in^3)	R_x (in)	I_y (in^4)	R_y (in)	I_x (in^4)	S_x (in^3)	M_a (in-k)	M_{ad} (in-k)	Va_g (lb)	Va_{net} (lb)	Jx1000 (in4)	C_w (in^6)	X_o (in)	m (in)	R_o (in)	β	L_u (in)
162S125-18	0.0188	33	0.080	0.27	0.038	0.046	0.686	0.016	0.447	0.034	0.031	0.62	0.58	302	100	0.009	0.009	-1.029	0.594	1.315	0.388	29.0
162S125-27	0.0283	33	0.120	0.41	0.056	0.069	0.682	0.023	0.443	0.055	0.053	1.05	0.99	494	106	0.032	0.013	-1.018	0.587	1.303	0.390	29.1
162S125-30	0.0312	33	0.132	0.45	0.061	0.075	0.681	0.026	0.441	0.060	0.061	1.20	1.13	543	106	0.043	0.014	-1.014	0.585	1.299	0.390	29.2
162S125-33	0.0346	33	0.145	0.49	0.067	0.083	0.679	0.028	0.440	0.066	0.070	1.38	1.28	601	105	0.058	0.016	-1.010	0.583	1.294	0.391	29.3
250S125-18	0.0188	33	0.097	0.33	0.099	0.079	1.014	0.019	0.439	0.090	0.058	1.14	0.93	258	196	0.011	0.023	-0.904	0.543	1.428	0.599	29.0
250S125-27	0.0283	33	0.144	0.49	0.147	0.118	1.009	0.027	0.434	0.145	0.096	1.89	1.61	685	354	0.039	0.034	-0.893	0.537	1.416	0.602	28.9
250S125-30	0.0312	33	0.159	0.54	0.161	0.129	1.008	0.030	0.433	0.159	0.108	2.14	1.84	833	378	0.052	0.037	-0.890	0.535	1.413	0.603	28.9
250S125-33	0.0346	33	0.176	0.60	0.178	0.142	1.007	0.033	0.431	0.175	0.124	2.45	2.11	975	399	0.070	0.040	-0.886	0.532	1.409	0.604	28.9
250S125-43	0.0451	33	0.227	0.77	0.228	0.182	1.002	0.041	0.427	0.226	0.181	3.47	3.00	1266	394	0.154	0.050	-0.874	0.526	1.396	0.608	28.9
250S125-54	0.0566	33	0.280	0.95	0.277	0.222	0.994	0.049	0.419	0.277	0.220	4.27	3.99	1553	373	0.299	0.060	-0.859	0.518	1.379	0.612	26.8
350S125-18	0.0188	33	0.115	0.39	0.215	0.123	1.366	0.021	0.423	0.202	0.075	1.48	1.34	180	159	0.014	0.050	-0.798	0.495	1.638	0.763	28.8
350S125-27	0.0283	33	0.173	0.59	0.320	0.183	1.361	0.030	0.419	0.315	0.135	2.67	2.37	614	359	0.046	0.073	-0.788	0.489	1.627	0.766	28.7
350S125-30	0.0312	33	0.190	0.65	0.351	0.201	1.360	0.033	0.417	0.346	0.156	3.08	2.71	824	435	0.062	0.079	-0.784	0.488	1.624	0.767	28.6
350S125-33	0.0346	33	0.210	0.72	0.388	0.222	1.358	0.036	0.416	0.382	0.181	3.58	3.13	1024	487	0.084	0.087	-0.781	0.485	1.621	0.768	28.6
350S125-43	0.0451	33	0.272	0.93	0.498	0.284	1.352	0.046	0.411	0.494	0.265	5.25	4.51	1740	631	0.185	0.109	-0.769	0.479	1.609	0.771	28.5
350S125-54	0.0566	33	0.337	1.15	0.609	0.348	1.344	0.055	0.403	0.609	0.332	6.57	6.08	2253	633	0.360	0.131	-0.755	0.472	1.593	0.775	28.4
362S125-18	0.0188	33	0.118	0.40	0.234	0.129	1.409	0.021	0.421	0.220	0.078	1.54	1.39	173	163	0.014	0.054	-0.786	0.490	1.667	0.778	28.8
362S125-27	0.0283	33	0.176	0.60	0.347	0.192	1.404	0.031	0.416	0.342	0.141	2.78	2.47	592	370	0.047	0.079	-0.776	0.484	1.657	0.781	28.6
362S125-30	0.0312	33	0.194	0.66	0.381	0.210	1.402	0.033	0.415	0.376	0.162	3.21	2.83	793	449	0.063	0.086	-0.773	0.482	1.654	0.782	28.6
362S125-33	0.0346	33	0.215	0.73	0.421	0.232	1.401	0.037	0.413	0.415	0.189	3.73	3.26	1024	521	0.086	0.094	-0.770	0.480	1.651	0.783	28.5
362S125-43	0.0451	33	0.278	0.95	0.541	0.298	1.395	0.046	0.408	0.537	0.278	5.48	4.71	1740	676	0.188	0.118	-0.758	0.474	1.640	0.786	28.4
362S125-54	0.0566	33	0.344	1.17	0.661	0.365	1.386	0.055	0.401	0.661	0.349	6.91	6.36	2341	705	0.367	0.142	-0.744	0.466	1.624	0.790	28.3
400S125-18[1]	0.0188	33	0.125	0.42	0.294	0.147	1.536	0.021	0.415	0.279	0.087	1.43	1.29	156	125	0.015	0.068	-0.755	0.475	1.761	0.816	28.7
400S125-27	0.0283	33	0.187	0.64	0.438	0.219	1.531	0.031	0.410	0.431	0.158	3.12	2.76	533	398	0.050	0.098	-0.745	0.469	1.751	0.819	28.5
400S125-30	0.0312	33	0.206	0.70	0.481	0.240	1.529	0.034	0.409	0.474	0.182	3.60	3.16	715	484	0.067	0.108	-0.742	0.467	1.748	0.820	28.5
400S125-33	0.0346	33	0.228	0.77	0.531	0.265	1.527	0.038	0.407	0.524	0.213	4.20	3.66	976	595	0.091	0.118	-0.738	0.465	1.745	0.821	28.4
400S125-43	0.0451	33	0.295	1.00	0.682	0.341	1.522	0.048	0.402	0.678	0.314	6.20	5.31	1740	810	0.200	0.148	-0.727	0.459	1.734	0.824	28.2
400S125-54	0.0566	33	0.365	1.24	0.836	0.418	1.512	0.057	0.394	0.836	0.399	7.88	7.19	2604	944	0.390	0.178	-0.713	0.452	1.718	0.828	28.1
550S125-18[2]	0.0188	33	0.153	0.52	0.630	0.229	2.029	0.023	0.390	0.537	0.130	2.14	1.77	112	89	0.018	0.141	-0.651	0.423	2.166	0.910	28.2
550S125-27	0.0283	33	0.229	0.78	0.939	0.341	2.023	0.034	0.385	0.900	0.238	4.70	3.89	382	382	0.061	0.205	-0.642	0.417	2.158	0.912	27.9
550S125-30	0.0312	33	0.252	0.86	1.032	0.375	2.022	0.037	0.384	0.999	0.275	5.44	4.49	512	512	0.082	0.224	-0.639	0.416	2.155	0.912	27.9
550S125-33	0.0346	33	0.279	0.95	1.140	0.415	2.020	0.041	0.382	1.115	0.321	6.35	5.23	698	698	0.112	0.246	-0.636	0.414	2.152	0.913	27.8
550S125-43	0.0451	33	0.362	1.23	1.469	0.534	2.013	0.052	0.377	1.460	0.492	9.72	7.71	1550	1199	0.246	0.309	-0.626	0.408	2.142	0.915	27.6
550S125-54	0.0566	33	0.450	1.53	1.806	0.657	2.003	0.062	0.370	1.805	0.641	12.66	10.63	2740	1666	0.481	0.374	-0.613	0.401	2.127	0.917	27.3
600S125-18[2]	0.0188	33	0.162	0.55	0.779	0.260	2.190	0.024	0.382	0.652	0.142	2.35	1.92	102	82	0.019	0.172	-0.623	0.408	2.308	0.927	28.0
600S125-27[1]	0.0283	33	0.243	0.83	1.161	0.387	2.184	0.035	0.378	1.100	0.262	4.33	3.54	349	279	0.065	0.251	-0.614	0.403	2.300	0.929	27.7
600S125-30	0.0312	33	0.268	0.91	1.276	0.425	2.182	0.038	0.376	1.222	0.304	6.00	4.91	468	468	0.087	0.274	-0.611	0.401	2.297	0.929	27.7
600S125-33	0.0346	33	0.297	1.01	1.410	0.470	2.180	0.042	0.375	1.366	0.355	7.01	5.73	638	638	0.118	0.300	-0.608	0.399	2.294	0.930	27.6
600S125-43	0.0451	33	0.385	1.31	1.818	0.606	2.173	0.053	0.370	1.810	0.544	10.75	8.50	1415	1240	0.261	0.379	-0.598	0.393	2.284	0.931	27.3
600S125-54	0.0566	33	0.479	1.63	2.237	0.746	2.162	0.063	0.362	2.236	0.720	14.24	11.77	2740	1890	0.511	0.457	-0.586	0.386	2.269	0.933	27.1
800S125-33[1]	0.0346	33	0.366	1.24	2.883	0.721	2.807	0.044	0.347	2.666	0.492	8.11	6.28	474	379	0.146	0.583	-0.519	0.350	2.875	0.967	26.6
800S125-43	0.0451	33	0.475	1.62	3.723	0.931	2.799	0.056	0.342	3.605	0.750	14.82	11.36	1051	1051	0.322	0.735	-0.510	0.344	2.866	0.968	26.4
800S125-54	0.0566	33	0.592	2.01	4.596	1.149	2.787	0.066	0.335	4.571	1.018	20.12	16.01	2091	2091	0.632	0.890	-0.500	0.338	2.851	0.969	26.0

1 Web-height to thickness ratio exceeds 200. Web Stiffeners are required at all support points and concentrated loads.

2 When web height-to thickness ratio exceeds 260, or flange width-to-thickness rato exceeds 60, effective properties are not calculated (limitations in AISI Section B4.1).

See Section Properties Table Notes

Structural (S) Stud Section Properties

Member	Design Thickness (in)	Fy (ksi)	Gross Properties							Effective Properties						Torsional Properties						
			Area (in^2)	Weight (lb/ft)	I_x (in^4)	S_x (in^3)	R_x (in)	I_y (in^4)	R_y (in)	I_x (in^4)	S_x (in^3)	M_a (in-k)	M_{ad} (in-k)	Va_g (lb)	Va_{net} (lb)	Jx1000 (in4)	C_w (in6)	X_o (in)	m (in)	R_o (in)	β	L_u (in)
250S137-33	0.0346	33	0.197	0.67	0.203	0.163	1.015	0.052	0.515	0.203	0.157	3.09	2.91	975	399	0.079	0.076	-1.141	0.677	1.612	0.499	35.6
250S137-43	0.0451	33	0.255	0.87	0.261	0.208	1.011	0.067	0.511	0.261	0.207	4.25	4.14	1266	394	0.173	0.096	-1.129	0.670	1.599	0.501	33.6
250S137-54	0.0566	33	0.316	1.07	0.318	0.255	1.004	0.080	0.504	0.318	0.253	5.72	5.71	1553	373	0.337	0.115	-1.115	0.663	1.583	0.504	33.4
250S137-54	0.0566	50	0.316	1.07	0.318	0.255	1.004	0.080	0.504	0.318	0.246	7.38	7.09	2353	565	0.337	0.115	-1.115	0.663	1.583	0.504	27.1
250S137-68	0.0713	50	0.390	1.33	0.386	0.309	0.995	0.096	0.495	0.386	0.307	10.62	10.22	2866	519	0.661	0.138	-1.096	0.653	1.561	0.507	26.8
250S162-33	0.0346	33	0.223	0.76	0.235	0.188	1.027	0.087	0.624	0.235	0.179	3.54	3.41	975	399	0.089	0.146	-1.470	0.859	1.898	0.401	44.1
250S162-43	0.0451	33	0.289	0.98	0.302	0.242	1.022	0.111	0.620	0.302	0.24	5.15	5.01	1266	394	0.196	0.184	-1.457	0.852	1.885	0.402	42.1
250S162-54	0.0566	33	0.358	1.22	0.370	0.296	1.016	0.135	0.613	0.370	0.294	6.53	6.53	1553	373	0.383	0.223	-1.443	0.845	1.868	0.404	41.8
250S162-54	0.0566	50	0.358	1.22	0.370	0.296	1.016	0.135	0.613	0.370	0.287	8.60	8.32	2353	565	0.383	0.223	-1.443	0.845	1.868	0.404	33.9
250S162-68	0.0713	50	0.443	1.51	0.450	0.360	1.008	0.162	0.605	0.451	0.358	11.97	11.73	2866	519	0.752	0.268	-1.424	0.835	1.847	0.405	33.7
350S162-33	0.0346	33	0.258	0.88	0.508	0.291	1.404	0.098	0.617	0.508	0.264	5.22	4.99	1024	487	0.103	0.277	-1.324	0.796	2.026	0.573	42.7
350S162-43	0.0451	33	0.334	1.14	0.655	0.374	1.400	0.125	0.612	0.655	0.364	7.18	6.68	1740	631	0.227	0.350	-1.312	0.789	2.014	0.575	42.6
350S162-54	0.0566	33	0.415	1.41	0.805	0.460	1.393	0.152	0.606	0.805	0.451	10.01	9.82	2253	633	0.443	0.426	-1.298	0.782	1.998	0.578	42.7
350S162-54	0.0566	50	0.415	1.41	0.805	0.460	1.393	0.152	0.606	0.805	0.435	13.02	12.35	3372	947	0.443	0.426	-1.298	0.782	1.998	0.578	34.5
350S162-68	0.0713	50	0.515	1.75	0.985	0.563	1.383	0.184	0.597	0.985	0.551	18.26	17.49	4203	897	0.872	0.514	-1.280	0.772	1.977	0.581	34.5
350S162-97	0.1017	50	0.711	2.42	1.321	0.755	1.363	0.238	0.579	1.322	0.739	26.22	26.15	5705	775	2.452	0.672	-1.242	0.752	1.932	0.587	34.7
350S200-43	0.0451	33	0.379	1.29	0.771	0.441	1.426	0.224	0.768	0.771	0.418	8.25	8.08	1740	631	0.257	0.687	-1.748	1.032	2.383	0.462	53.7
350S200-54	0.0566	33	0.471	1.60	0.950	0.543	1.420	0.274	0.762	0.950	0.534	11.62	11.37	2253	633	0.503	0.838	-1.733	1.024	2.367	0.464	53.8
350S200-54	0.0566	50	0.471	1.60	0.950	0.543	1.420	0.274	0.762	0.950	0.481	14.40	14.26	3372	947	0.503	0.838	-1.733	1.024	2.367	0.464	43.5
350S200-68	0.0713	50	0.586	1.99	1.167	0.667	1.411	0.333	0.754	1.168	0.643	19.25	18.87	4203	897	0.993	1.018	-1.715	1.014	2.345	0.465	43.5
350S200-97	0.1017	50	0.813	2.77	1.577	0.901	1.393	0.440	0.736	1.578	0.886	30.55	30.35	5705	775	2.803	1.347	-1.676	0.994	2.300	0.469	43.9
362S137-33	0.0346	33	0.236	0.80	0.479	0.264	1.424	0.059	0.501	0.479	0.239	4.73	4.45	1024	521	0.094	0.165	-1.003	0.615	1.813	0.694	34.7
362S137-43	0.0451	33	0.306	1.04	0.616	0.340	1.419	0.075	0.497	0.616	0.328	6.48	6.20	1740	676	0.207	0.208	-0.991	0.608	1.801	0.697	34.6
362S137-54	0.0566	33	0.379	1.29	0.756	0.417	1.412	0.091	0.490	0.756	0.408	8.87	8.44	2341	705	0.405	0.251	-0.978	0.601	1.786	0.700	34.6
362S137-54	0.0566	50	0.379	1.29	0.756	0.417	1.412	0.091	0.490	0.756	0.392	11.73	11.05	3372	1016	0.405	0.251	-0.978	0.601	1.786	0.700	27.9
362S137-68	0.0713	50	0.470	1.60	0.923	0.509	1.401	0.109	0.481	0.923	0.498	17.23	16.15	4370	1004	0.797	0.302	-0.959	0.592	1.765	0.704	27.8
362S162-33	0.0346	33	0.262	0.89	0.551	0.304	1.450	0.099	0.616	0.551	0.275	5.44	5.20	1024	521	0.105	0.297	-1.308	0.789	2.048	0.592	42.6
362S162-43	0.0451	33	0.340	1.16	0.710	0.392	1.445	0.127	0.611	0.710	0.380	7.50	7.00	1740	676	0.230	0.376	-1.297	0.782	2.036	0.594	42.5
362S162-54	0.0566	33	0.422	1.44	0.873	0.482	1.438	0.154	0.605	0.873	0.473	10.27	9.94	2341	705	0.451	0.457	-1.283	0.774	2.020	0.597	42.5
362S162-54	0.0566	50	0.422	1.44	0.873	0.482	1.438	0.154	0.605	0.873	0.454	13.60	12.87	3372	1016	0.451	0.457	-1.283	0.774	2.020	0.597	34.4
362S162-68	0.0713	50	0.524	1.78	1.069	0.590	1.429	0.186	0.596	1.069	0.579	19.16	18.24	4370	1004	0.887	0.552	-1.264	0.765	1.999	0.600	34.4
362S162-97	0.1017	50	0.724	2.46	1.436	0.792	1.408	0.241	0.577	1.437	0.777	27.56	27.47	5943	875	2.496	0.723	-1.226	0.745	1.954	0.606	34.5
362S200-33	0.0346	33	0.297	1.01	0.648	0.358	1.478	0.177	0.772	0.646	0.301	5.96	5.98	1024	521	0.118	0.577	-1.741	1.030	2.411	0.478	53.6
362S200-43	0.0451	33	0.385	1.31	0.836	0.461	1.474	0.227	0.767	0.836	0.436	8.62	8.41	1740	676	0.261	0.734	-1.729	1.024	2.398	0.480	53.5
362S200-54	0.0566	33	0.479	1.63	1.030	0.568	1.467	0.277	0.761	1.030	0.560	12.16	11.87	2341	705	0.511	0.896	-1.715	1.016	2.382	0.482	53.6
362S200-54	0.0566	50	0.479	1.63	1.030	0.568	1.467	0.277	0.761	1.030	0.502	15.03	14.84	3372	1016	0.511	0.896	-1.715	1.016	2.382	0.482	43.3
362S200-68	0.0713	50	0.595	2.02	1.266	0.698	1.458	0.337	0.753	1.266	0.674	20.18	19.67	4370	1004	1.008	1.089	-1.696	1.006	2.360	0.484	43.3
362S200-97	0.1017	50	0.826	2.81	1.712	0.945	1.440	0.446	0.735	1.713	0.929	32.07	31.84	5943	875	2.847	1.441	-1.658	0.986	2.316	0.487	43.6
362S250-43	0.0451	33	0.430	1.46	0.980	0.541	1.510	0.385	0.946	0.980	0.459	9.07	9.06	1740	676	0.292	1.230	-2.199	1.277	2.830	0.396	64.1
362S250-54	0.0566	33	0.535	1.82	1.210	0.668	1.504	0.473	0.940	1.211	0.592	11.69	12.06	2341	705	0.571	1.506	-2.184	1.269	2.813	0.397	64.3
362S250-54	0.0566	50	0.535	1.82	1.210	0.668	1.504	0.473	0.940	1.204	0.526	15.74	15.93	3372	1016	0.571	1.506	-2.184	1.269	2.813	0.397	52.0
362S250-68	0.0713	50	0.666	2.27	1.491	0.823	1.496	0.578	0.931	1.491	0.700	20.94	22.30	4370	1004	1.129	1.837	-2.165	1.259	2.791	0.398	52.0
362S250-97	0.1017	50	0.927	3.16	2.028	1.119	1.479	0.773	0.913	2.029	1.059	31.71	32.47	5943	875	3.197	2.452	-2.126	1.239	2.746	0.401	52.5
362S300-33[2]	0.0346	33	0.366	1.24	0.871	0.481	1.543	0.463	1.125	-	-	-	-	-	-	0.146	1.478	-2.686	1.537	3.296	0.336	74.3
362S300-43[2]	0.0451	33	0.475	1.62	1.125	0.621	1.539	0.596	1.120	-	-	-	-	-	-	0.322	1.888	-2.674	1.530	3.282	0.336	74.3
362S300-54	0.0566	33	0.592	2.01	1.391	0.767	1.533	0.734	1.114	1.383	0.617	12.19	12.82	2341	705	0.632	2.316	-2.659	1.522	3.265	0.337	74.5
362S300-54	0.0566	50	0.592	2.01	1.391	0.767	1.533	0.734	1.114	1.311	0.540	16.18	16.75	3372	1016	0.632	2.316	-2.659	1.522	3.265	0.337	60.2
362S300-68	0.0713	50	0.738	2.51	1.716	0.947	1.525	0.900	1.105	1.685	0.726	21.74	22.59	4370	1004	1.250	2.833	-2.640	1.512	3.243	0.337	60.4
362S300-97	0.1017	50	1.029	3.50	2.343	1.293	1.509	1.213	1.086	2.325	1.161	34.77	35.10	5943	875	3.548	3.803	-2.600	1.491	3.196	0.338	60.9
400S137-33	0.0346	33	0.249	0.85	0.603	0.302	1.556	0.061	0.496	0.603	0.269	5.31	4.98	976	595	0.099	0.204	-0.965	0.597	1.897	0.741	34.5
400S137-43	0.0451	33	0.323	1.10	0.776	0.388	1.551	0.078	0.491	0.776	0.371	7.32	7.08	1740	810	0.219	0.257	-0.954	0.591	1.886	0.744	34.3
400S137-54	0.0566	33	0.401	1.36	0.953	0.477	1.543	0.094	0.484	0.953	0.465	9.19	8.44	2604	944	0.428	0.311	-0.940	0.583	1.870	0.747	34.3
400S137-54	0.0566	50	0.401	1.36	0.953	0.477	1.543	0.094	0.484	0.953	0.443	13.27	12.42	3372	1223	0.428	0.311	-0.940	0.583	1.870	0.747	27.7
400S137-68	0.0713	50	0.497	1.69	1.165	0.583	1.531	0.112	0.475	1.166	0.571	17.10	15.28	4871	1356	0.842	0.375	-0.922	0.574	1.850	0.751	27.6

1 Web-height to thickness ratio exceeds 200. Web Stiffeners are required at all support points and concentrated loads.

2 When web height-to thickness ratio exceeds 260, or flange width-to-thickness rato exceeds 60, effective properties are not calculated (limitations in AISI Section B4.1).

See Section Properties Table Notes

Structural (S) Stud Section Properties

Member	Design Thickness (in)	Fy (ksi)	Gross Properties							Effective Properties						Torsional Properties						
			Area (in^2)	Weight (lb/ft)	I_x (in^4)	S_x (in^3)	R_x (in)	I_y (in^4)	R_y (in)	I_x (in^4)	S_x (in^3)	M_a (in-k)	M_{ad} (in-k)	Va_g (lb)[1]	Va_{net} (lb)[1]	Jx1000 (in4)	C_w (in6)	X_o (in)	m (in)	R_o (in)	β	L_u (in)
400S162-33	0.0346	33	0.275	0.94	0.692	0.346	1.586	0.103	0.611	0.692	0.309	6.11	5.81	976	595	0.110	0.363	-1.263	0.768	2.118	0.644	42.3
400S162-43	0.0451	33	0.357	1.21	0.892	0.446	1.581	0.131	0.606	0.892	0.428	8.47	7.96	1740	810	0.242	0.460	-1.252	0.761	2.106	0.647	42.2
400S162-54	0.0566	33	0.443	1.51	1.098	0.549	1.574	0.159	0.600	1.098	0.538	10.62	9.86	2604	944	0.473	0.560	-1.238	0.754	2.090	0.649	42.2
400S162-54	0.0566	50	0.443	1.51	1.098	0.549	1.574	0.159	0.600	1.098	0.513	15.35	14.44	3372	1223	0.473	0.560	-1.238	0.754	2.090	0.649	34.1
400S162-68	0.0713	50	0.550	1.87	1.346	0.673	1.564	0.192	0.591	1.347	0.662	19.81	18.13	4871	1356	0.933	0.677	-1.220	0.745	2.069	0.653	34.0
400S162-97	0.1017	50	0.762	2.59	1.813	0.907	1.542	0.250	0.572	1.815	0.893	31.68	31.53	6658	1207	2.628	0.889	-1.182	0.725	2.026	0.660	34.1
400S200-33	0.0346	33	0.310	1.05	0.812	0.406	1.619	0.183	0.769	0.810	0.338	6.69	6.67	976	595	0.124	0.697	-1.688	1.007	2.462	0.530	53.1
400S200-43	0.0451	33	0.402	1.37	1.048	0.524	1.615	0.235	0.764	1.048	0.491	9.71	9.41	1740	810	0.272	0.886	-1.676	1.000	2.450	0.532	53.0
400S200-54	0.0566	33	0.500	1.70	1.292	0.646	1.608	0.287	0.758	1.292	0.635	12.54	11.67	2603	944	0.534	1.083	-1.662	0.993	2.433	0.534	53.0
400S200-54	0.0566	50	0.500	1.70	1.292	0.646	1.608	0.287	0.758	1.292	0.566	16.94	16.61	3372	1223	0.534	1.083	-1.662	0.993	2.433	0.534	42.9
400S200-68	0.0713	50	0.622	2.12	1.590	0.795	1.599	0.349	0.750	1.590	0.767	22.96	22.08	4871	1356	1.054	1.318	-1.643	0.983	2.412	0.536	42.9
400S200-97	0.1017	50	0.864	2.94	2.156	1.078	1.580	0.463	0.732	2.157	1.064	36.71	36.38	6658	1207	2.978	1.749	-1.605	0.963	2.368	0.541	43.1
400S250-33[2]	0.0346	33	0.344	1.17	0.948	0.474	1.660	0.310	0.949	-	-	-	-	-	-	0.137	1.165	-2.151	1.259	2.878	0.441	63.7
400S250-43	0.0451	33	0.447	1.52	1.224	0.612	1.655	0.399	0.945	1.224	0.516	10.19	10.09	1740	810	0.303	1.486	-2.139	1.252	2.865	0.443	63.7
400S250-54	0.0566	33	0.556	1.89	1.512	0.756	1.649	0.490	0.938	1.512	0.668	13.19	13.47	2603	944	0.594	1.821	-2.124	1.244	2.848	0.444	63.8
400S250-54	0.0566	50	0.556	1.89	1.512	0.756	1.649	0.490	0.938	1.505	0.592	17.71	17.74	3372	1223	0.594	1.821	-2.124	1.244	2.848	0.444	51.6
400S250-68	0.0713	50	0.693	2.36	1.865	0.932	1.640	0.599	0.929	1.865	0.793	23.75	23.81	4871	1356	1.174	2.225	-2.105	1.235	2.826	0.445	51.6
400S250-97	0.1017	50	0.966	3.28	2.542	1.271	1.623	0.801	0.911	2.543	1.206	36.10	36.64	6658	1207	3.329	2.978	-2.066	1.214	2.781	0.448	51.9
400S300-33[2]	0.0346	33	0.379	1.29	1.084	0.542	1.692	0.479	1.125	-	-	-	-	-	-	0.151	1.786	-2.621	1.510	3.316	0.375	73.9
400S300-43[2]	0.0451	33	0.492	1.67	1.400	0.700	1.687	0.617	1.120	-	-	-	-	-	-	0.334	2.282	-2.608	1.503	3.302	0.376	73.9
400S300-54	0.0566	33	0.613	2.09	1.732	0.866	1.681	0.760	1.114	1.723	0.695	13.74	14.25	2603	944	0.655	2.802	-2.594	1.496	3.285	0.377	74.0
400S300-54	0.0566	50	0.613	2.09	1.732	0.866	1.681	0.760	1.114	1.634	0.608	18.19	18.59	3372	1223	0.655	2.802	-2.594	1.496	3.285	0.377	59.9
400S300-68	0.0713	50	0.764	2.60	2.140	1.070	1.673	0.933	1.105	2.099	0.822	24.62	25.13	4871	1356	1.295	3.432	-2.574	1.486	3.263	0.378	60.0
400S300-97	0.1017	50	1.067	3.63	2.928	1.464	1.656	1.259	1.086	2.903	1.318	39.46	39.25	6658	1207	3.679	4.619	-2.535	1.465	3.217	0.379	60.3
550S162-33	0.0346	33	0.327	1.11	1.459	0.530	2.112	0.113	0.589	1.459	0.508	10.03	8.28	698	698	0.130	0.713	-1.114	0.697	2.459	0.795	41.4
550S162-43	0.0451	33	0.424	1.44	1.884	0.685	2.107	0.145	0.584	1.883	0.680	14.44	12.37	1550	1199	0.288	0.905	-1.103	0.691	2.449	0.797	41.2
550S162-54	0.0566	33	0.528	1.80	2.325	0.845	2.098	0.176	0.577	2.325	0.840	18.64	17.07	2740	1666	0.564	1.105	-1.090	0.684	2.434	0.800	41.0
550S162-54	0.0566	50	0.528	1.80	2.325	0.845	2.098	0.176	0.577	2.325	0.815	24.41	20.87	3093	1881	0.564	1.105	-1.090	0.684	2.434	0.800	33.2
550S162-68	0.0713	50	0.657	2.24	2.862	1.041	2.087	0.212	0.569	2.862	1.034	33.97	29.87	5352	2532	1.114	1.342	-1.072	0.675	2.414	0.803	33.1
550S162-97	0.1017	50	0.915	3.11	3.887	1.414	2.062	0.276	0.550	3.889	1.404	49.79	48.69	9518	3026	3.154	1.775	-1.037	0.656	2.372	0.809	32.8
550S200-33	0.0346	33	0.362	1.23	1.694	0.616	2.164	0.204	0.751	1.680	0.553	10.92	9.49	698	698	0.144	1.326	-1.508	0.925	2.743	0.698	51.9
550S200-43	0.0451	33	0.469	1.60	2.189	0.796	2.159	0.261	0.746	2.189	0.772	15.25	13.50	1550	1199	0.318	1.691	-1.496	0.918	2.731	0.700	51.7
550S200-54	0.0566	33	0.585	1.99	2.707	0.984	2.152	0.320	0.739	2.707	0.979	21.29	19.28	2740	1666	0.624	2.072	-1.483	0.911	2.716	0.702	51.6
550S200-54	0.0566	50	0.585	1.99	2.707	0.984	2.152	0.320	0.739	2.707	0.893	26.74	23.86	3093	1881	0.624	2.072	-1.483	0.911	2.716	0.702	41.8
550S200-68	0.0713	50	0.729	2.48	3.341	1.215	2.141	0.389	0.731	3.341	1.182	35.39	32.07	5352	2532	1.235	2.531	-1.465	0.902	2.695	0.705	41.7
550S200-97	0.1017	50	1.016	3.46	4.565	1.660	2.119	0.516	0.713	4.566	1.650	56.92	54.74	9518	3026	3.504	3.384	-1.428	0.882	2.653	0.710	41.5
600S137-33	0.0346	33	0.318	1.08	1.583	0.528	2.230	0.069	0.464	1.551	0.442	8.73	7.76	638	638	0.127	0.500	-0.807	0.519	2.416	0.889	33.5
600S137-43	0.0451	33	0.413	1.41	2.042	0.681	2.224	0.087	0.459	2.042	0.635	12.56	11.17	1415	1240	0.280	0.633	-0.796	0.513	2.406	0.890	33.3
600S137-54	0.0566	33	0.514	1.75	2.518	0.839	2.214	0.105	0.452	2.518	0.826	16.33	15.05	2740	1890	0.549	0.769	-0.784	0.506	2.392	0.893	33.0
600S137-54	0.0566	50	0.514	1.75	2.518	0.839	2.214	0.105	0.452	2.518	0.765	22.90	19.85	2822	1947	0.549	0.769	-0.784	0.506	2.392	0.893	26.8
600S137-68	0.0713	50	0.640	2.18	3.095	1.032	2.200	0.125	0.443	3.095	1.024	30.65	26.91	5352	2880	1.084	0.930	-0.768	0.497	2.372	0.895	26.5
600S137-97	0.1017	50	0.889	3.03	4.190	1.397	2.171	0.159	0.423	4.191	1.387	50.49	48.17	10472	3805	3.066	1.216	-0.734	0.480	2.330	0.901	26.1
600S162-33	0.0346	33	0.344	1.17	1.793	0.598	2.282	0.116	0.581	1.793	0.573	11.33	9.09	638	638	0.137	0.861	-1.072	0.677	2.588	0.828	41.1
600S162-43	0.0451	33	0.447	1.52	2.316	0.772	2.277	0.148	0.576	2.316	0.768	16.29	13.62	1415	1240	0.303	1.095	-1.062	0.670	2.577	0.830	40.9
600S162-54	0.0566	33	0.556	1.89	2.861	0.954	2.268	0.180	0.570	2.861	0.948	21.05	18.87	2740	1890	0.594	1.337	-1.049	0.663	2.563	0.833	40.7
600S162-54	0.0566	50	0.556	1.89	2.861	0.954	2.268	0.180	0.570	2.861	0.922	27.59	23.02	2822	1947	0.594	1.337	-1.049	0.663	2.563	0.833	33.0
600S162-68	0.0713	50	0.693	2.36	3.526	1.175	2.256	0.218	0.561	3.526	1.169	38.37	33.04	5352	2880	1.174	1.626	-1.032	0.655	2.543	0.835	32.8
600S162-97	0.1017	50	0.966	3.28	4.799	1.600	2.229	0.283	0.542	4.800	1.591	56.42	54.27	10472	3805	3.329	2.153	-0.997	0.636	2.501	0.841	32.5
600S162-118	0.1242	50	1.158	3.94	5.655	1.885	2.209	0.322	0.527	5.658	1.874	68.57	68.57	12526	3622	5.956	2.487	-0.971	0.623	2.470	0.846	32.3
600S200-33	0.0346	33	0.379	1.29	2.076	0.692	2.340	0.209	0.743	2.062	0.610	12.06	10.43	638	638	0.151	1.593	-1.457	0.901	2.855	0.740	51.6
600S200-43	0.0451	33	0.492	1.67	2.683	0.894	2.335	0.268	0.739	2.683	0.868	17.16	14.88	1415	1240	0.334	2.033	-1.446	0.894	2.844	0.742	51.4
600S200-54	0.0566	33	0.613	2.09	3.320	1.107	2.327	0.329	0.732	3.320	1.101	23.96	21.30	2740	1890	0.655	2.493	-1.432	0.887	2.829	0.744	51.3
600S200-54	0.0566	50	0.613	2.09	3.320	1.107	2.327	0.329	0.732	3.320	1.007	30.16	26.31	2822	1947	0.655	2.493	-1.432	0.887	2.829	0.744	41.6
600S200-68	0.0713	50	0.764	2.60	4.102	1.367	2.316	0.400	0.723	4.101	1.332	39.86	35.48	5352	2880	1.295	3.047	-1.415	0.878	2.809	0.746	41.4
600S200-97	0.1017	50	1.067	3.63	5.614	1.871	2.293	0.530	0.705	5.615	1.862	64.24	60.86	10472	3805	3.679	4.080	-1.378	0.859	2.767	0.752	41.2
600S200-118	0.1242	50	1.283	4.36	6.643	2.214	2.276	0.612	0.691	6.646	2.204	78.09	77.88	12526	3622	6.595	4.753	-1.351	0.845	2.736	0.756	41.1

1 Web-height to thickness ratio exceeds 200. Web Stiffeners are required at all support points and concentrated loads.

2 When web height-to thickness ratio exceeds 260, or flange width-to-thickness rato exceeds 60, effective properties are not calculated (limitations in AISI Section B4.1).

See Section Properties Table Notes

Structural (S) Stud Section Properties

Member	Design Thickness (in)	Fy (ksi)	Gross Properties							Effective Properties						Torsional Properties						
			Area (in^2)	Weight (lb/ft)	I_x (in^4)	S_x (in^3)	R_x (in)	I_y (in^4)	R_y (in)	I_x (in^4)	S_x (in^3)	M_a (in-k)	M_{ad} (in-k)	Va_g (lb)	Va_{net} (lb)	Jx1000 (in4)	C_w (in6)	X_o (in)	m (in)	R_o (in)	β	L_u (in)
600S250-43	0.0451	33	0.537	1.83	3.083	1.028	2.396	0.458	0.923	3.083	0.909	17.97	15.72	1415	1240	0.364	3.411	-1.874	1.136	3.179	0.652	62.4
600S250-54	0.0566	33	0.670	2.28	3.820	1.273	2.389	0.562	0.917	3.820	1.149	22.71	21.21	2740	1890	0.715	4.194	-1.860	1.129	3.163	0.654	62.3
600S250-54	0.0566	50	0.670	2.28	3.820	1.273	2.389	0.562	0.917	3.774	1.054	31.56	27.70	2822	1947	0.715	4.194	-1.860	1.129	3.163	0.654	50.5
600S250-68	0.0713	50	0.836	2.84	4.728	1.576	2.379	0.688	0.908	4.728	1.373	41.10	37.61	5352	2880	1.416	5.145	-1.842	1.119	3.142	0.657	50.4
600S250-97	0.1017	50	1.169	3.98	6.498	2.166	2.358	0.923	0.889	6.499	2.068	61.92	59.18	10472	3805	4.030	6.947	-1.803	1.100	3.099	0.661	50.2
600S250-118	0.1242	50	1.407	4.79	7.715	2.572	2.342	1.076	0.875	7.718	2.552	76.42	75.38	12526	3622	7.234	8.142	-1.775	1.085	3.066	0.665	46.7
600S300-54	0.0566	33	0.726	2.47	4.320	1.440	2.439	0.875	1.098	4.276	1.196	23.64	22.13	2740	1890	0.775	6.452	-2.299	1.372	3.527	0.575	72.8
600S300-54	0.0566	50	0.726	2.47	4.320	1.440	2.439	0.875	1.098	4.032	1.086	32.51	28.67	2822	1947	0.775	6.452	-2.299	1.372	3.527	0.575	59.1
600S300-68	0.0713	50	0.907	3.09	5.355	1.785	2.430	1.075	1.089	5.229	1.425	42.66	39.14	5352	2880	1.537	7.937	-2.280	1.363	3.506	0.577	58.9
600S300-97	0.1017	50	1.271	4.32	7.383	2.461	2.410	1.454	1.070	7.294	2.237	66.97	62.32	10472	3805	4.381	10.776	-2.241	1.343	3.461	0.581	58.8
600S300-118	0.1242	50	1.531	5.21	8.787	2.929	2.396	1.705	1.055	8.791	2.909	83.48	80.15	12526	3622	7.872	12.683	-2.212	1.328	3.427	0.583	55.4
600S350-54	0.0566	50	0.825	2.81	5.023	1.674	2.467	1.491	1.344	4.735	1.316	39.41	35.41	2822	1947	0.881	12.942	-3.037	1.787	4.137	0.461	74.4
600S350-68	0.0713	50	1.032	3.51	6.238	2.079	2.459	1.841	1.336	6.180	1.755	52.54	48.26	5352	2880	1.748	15.968	-3.018	1.777	4.116	0.462	74.4
600S350-97	0.1017	50	1.449	4.93	8.633	2.878	2.441	2.518	1.318	8.634	2.585	77.40	76.46	10472	3805	4.994	21.811	-2.979	1.757	4.071	0.464	74.4
600S350-118	0.1242	50	1.748	5.95	10.306	3.435	2.428	2.979	1.305	10.310	3.294	98.63	97.77	12526	3622	8.990	25.791	-2.951	1.742	4.038	0.466	70.6
800S137-33[1]	0.0346	33	0.388	1.32	3.199	0.800	2.873	0.073	0.435	3.004	0.606	10.01	8.53	474	379	0.155	0.957	-0.696	0.460	2.988	0.946	32.5
800S137-43	0.0451	33	0.503	1.71	4.135	1.034	2.866	0.093	0.430	4.007	0.876	17.32	14.99	1051	1051	0.341	1.214	-0.687	0.454	2.979	0.947	32.2
800S137-54	0.0566	33	0.627	2.13	5.111	1.278	2.855	0.112	0.423	5.081	1.164	22.99	20.57	2091	2091	0.670	1.478	-0.676	0.448	2.964	0.948	32.0
800S137-54	0.0566	50	0.627	2.13	5.111	1.278	2.855	0.112	0.423	4.982	1.058	31.67	26.77	2091	2091	0.670	1.478	-0.676	0.448	2.964	0.948	25.9
800S137-68	0.0713	50	0.782	2.66	6.305	1.576	2.839	0.134	0.414	6.290	1.452	43.46	36.98	4220	3367	1.325	1.789	-0.661	0.440	2.944	0.950	25.6
800S137-97	0.1017	50	1.093	3.72	8.601	2.150	2.806	0.170	0.394	8.601	2.143	73.24	65.11	10888	5940	3.767	2.349	-0.630	0.423	2.902	0.953	25.1
800S162-33[1]	0.0346	33	0.413	1.41	3.583	0.896	2.944	0.125	0.550	3.389	0.694	11.45	10.15	474	379	0.165	1.630	-0.936	0.607	3.138	0.911	40.1
800S162-43	0.0451	33	0.537	1.83	4.635	1.159	2.938	0.160	0.546	4.505	1.001	19.78	17.62	1051	1051	0.364	2.076	-0.926	0.601	3.128	0.912	39.8
800S162-54	0.0566	33	0.670	2.28	5.737	1.434	2.927	0.194	0.539	5.705	1.320	26.07	23.96	2091	2091	0.715	2.539	-0.914	0.594	3.114	0.914	39.6
800S162-54	0.0566	50	0.670	2.28	5.737	1.434	2.927	0.194	0.539	5.606	1.205	36.08	31.31	2091	2091	0.715	2.539	-0.914	0.594	3.114	0.914	32.1
800S162-68	0.0713	50	0.836	2.84	7.092	1.773	2.913	0.235	0.530	7.074	1.647	49.32	42.89	4220	3367	1.416	3.093	-0.899	0.586	3.094	0.916	31.9
800S162-97	0.1017	50	1.169	3.98	9.717	2.429	2.883	0.305	0.511	9.717	2.422	82.72	74.77	10888	5940	4.030	4.114	-0.866	0.568	3.053	0.920	31.4
800S162-118	0.1242	50	1.407	4.79	11.509	2.877	2.860	0.347	0.496	11.511	2.869	104.97	100.87	16239	7117	7.234	4.766	-0.842	0.556	3.023	0.922	28.0
800S200-33[1]	0.0346	33	0.448	1.52	4.097	1.024	3.024	0.227	0.712	4.096	0.792	13.06	11.76	474	379	0.179	2.971	-1.288	0.817	3.363	0.853	50.6
800S200-43	0.0451	33	0.582	1.98	5.303	1.326	3.018	0.292	0.708	5.302	1.288	25.45	20.34	1051	1051	0.395	3.797	-1.277	0.811	3.353	0.855	50.3
800S200-54	0.0566	33	0.726	2.47	6.574	1.644	3.009	0.357	0.701	6.573	1.639	35.67	29.36	2091	2091	0.775	4.663	-1.265	0.804	3.338	0.856	47.8
800S200-54	0.0566	50	0.726	2.47	6.574	1.644	3.009	0.357	0.701	6.573	1.483	44.41	36.01	2091	2091	0.775	4.663	-1.265	0.804	3.338	0.856	40.7
800S200-68	0.0713	50	0.907	3.09	8.143	2.036	2.996	0.435	0.692	8.142	1.989	59.54	49.13	4220	3367	1.537	5.712	-1.248	0.796	3.319	0.859	38.4
800S200-97	0.1017	50	1.271	4.32	11.207	2.802	2.970	0.577	0.674	11.207	2.795	96.41	85.83	10888	5940	4.381	7.684	-1.214	0.777	3.278	0.863	37.2
800S200-118	0.1242	50	1.531	5.21	13.320	3.330	2.950	0.666	0.659	13.322	3.322	117.70	112.34	16239	7117	7.872	8.981	-1.188	0.764	3.248	0.866	36.5
800S250-43	0.0451	33	0.627	2.13	6.017	1.504	3.097	0.500	0.893	6.016	1.294	25.57	21.41	1051	1051	0.425	6.374	-1.675	1.043	3.632	0.787	61.5
800S250-54	0.0566	33	0.783	2.66	7.467	1.867	3.089	0.614	0.886	7.466	1.703	33.65	29.16	2091	2091	0.836	7.850	-1.661	1.036	3.617	0.789	61.4
800S250-54	0.0566	50	0.783	2.66	7.467	1.867	3.089	0.614	0.886	7.399	1.490	44.61	37.84	2091	2091	0.836	7.850	-1.661	1.036	3.617	0.789	49.8
800S250-68	0.0713	50	0.978	3.33	9.263	2.316	3.077	0.752	0.877	9.258	2.047	61.28	51.85	4220	3367	1.658	9.652	-1.644	1.027	3.597	0.791	49.6
800S250-97	0.1017	50	1.372	4.67	12.793	3.198	3.053	1.009	0.858	12.793	3.067	91.82	83.02	10888	5940	4.731	13.091	-1.607	1.008	3.555	0.796	46.4
800S250-118	0.1242	50	1.655	5.63	15.246	3.811	3.035	1.176	0.843	15.248	3.786	113.36	107.04	16239	7117	8.511	15.395	-1.580	0.994	3.524	0.799	45.6
800S300-54	0.0566	50	0.839	2.86	8.360	2.090	3.156	0.959	1.069	7.906	1.486	44.48	38.97	2091	2091	0.896	12.076	-2.073	1.271	3.924	0.721	58.6
800S300-68	0.0713	50	1.050	3.57	10.384	2.596	3.145	1.179	1.060	10.125	2.124	63.58	53.66	4220	3367	1.779	14.888	-2.055	1.262	3.904	0.723	58.4
800S300-97	0.1017	50	1.474	5.01	14.379	3.595	3.123	1.595	1.040	14.189	3.295	98.64	86.69	10888	5940	5.082	20.304	-2.017	1.243	3.861	0.727	58.1
800S300-118	0.1242	50	1.779	6.05	17.172	4.293	3.107	1.872	1.026	17.174	4.104	122.86	112.62	16239	7117	9.149	23.979	-1.989	1.229	3.829	0.730	54.5
1000S162-431	0.0451	33	0.627	2.13	8.028	1.606	3.577	0.168	0.518	7.537	1.271	20.97	18.12	836	669	0.425	3.430	-0.823	0.545	3.707	0.951	38.8
1000S162-54	0.0566	33	0.783	2.66	9.954	1.991	3.566	0.204	0.511	9.638	1.694	33.47	29.91	1660	1660	0.836	4.198	-0.812	0.538	3.693	0.952	38.5
1000S162-54	0.0566	50	0.783	2.66	9.954	1.991	3.566	0.204	0.511	9.410	1.531	45.83	38.68	1660	1660	0.836	4.198	-0.812	0.538	3.693	0.952	31.3
1000S162-68	0.0713	50	0.978	3.33	12.330	2.466	3.550	0.247	0.502	11.978	2.122	63.53	53.74	3345	3345	1.658	5.121	-0.798	0.531	3.673	0.953	31.0
1000S162-97	0.1017	50	1.372	4.67	16.974	3.395	3.517	0.320	0.483	16.971	3.254	97.44	87.70	9862	7175	4.731	6.827	-0.768	0.514	3.632	0.955	30.4
1000S162-118	0.1242	50	1.655	5.63	20.177	4.035	3.491	0.364	0.469	20.177	4.028	130.76	120.56	16239	9539	8.511	7.924	-0.746	0.502	3.601	0.957	30.0
1000S200-431	0.0451	33	0.672	2.29	9.088	1.818	3.676	0.309	0.677	8.614	1.440	23.76	21.21	836	669	0.456	6.236	-1.147	0.743	3.910	0.914	49.3
1000S200-54	0.0566	33	0.839	2.86	11.282	2.256	3.666	0.378	0.671	10.962	1.958	38.69	34.77	1660	1660	0.896	7.665	-1.135	0.737	3.896	0.915	49.1
1000S200-54	0.0566	50	0.839	2.86	11.282	2.256	3.666	0.378	0.671	10.788	1.661	49.72	45.06	1660	1660	0.896	7.665	-1.135	0.737	3.896	0.915	39.8
1000S200-68	0.0713	50	1.050	3.57	13.999	2.800	3.652	0.460	0.662	13.676	2.389	71.52	62.15	3345	3345	1.779	9.401	-1.120	0.729	3.877	0.917	39.6
1000S200-97	0.1017	50	1.474	5.01	19.343	3.869	3.622	0.610	0.643	19.340	3.726	111.57	100.50	9862	7175	5.082	12.679	-1.088	0.711	3.836	0.920	39.0
1000S200-118	0.1242	50	1.779	6.05	23.060	4.612	3.600	0.704	0.629	23.060	4.605	149.43	137.74	16239	9539	9.149	14.848	-1.064	0.699	3.806	0.922	38.7

1 Web-height to thickness ratio exceeds 200. Web Stiffeners are required at all support points and concentrated loads.

2 When web height-to thickness ratio exceeds 260, or flange width-to-thickness rato exceeds 60, effective properties are not calculated (limitations in AISI Section B4.1).

See Section Properties Table Notes

Structural (S) Stud Section Properties

Member	Design Thickness (in)	Fy (ksi)	Gross Properties							Effective Properties						Torsional Properties						
			Area (in^2)	Weight (lb/ft)	I_x (in^4)	S_x (in^3)	R_x (in)	I_y (in^4)	R_y (in)	I_x (in^4)	S_x (in^3)	M_a (in-k)	M_{ad} (in-k)	Va_g (lb)	Va_{net} (lb)	Jx1000 (in4)	C_w (in6)	X_o (in)	m (in)	R_o (in)	β	L_u (in)
1000S250-431	0.0451	33	0.717	2.44	10.205	2.041	3.771	0.531	0.860	10.203	1.579	26.06	22.43	836	669	0.486	10.481	-1.518	0.965	4.155	0.867	60.7
1000S250-54	0.0566	33	0.896	3.05	12.681	2.536	3.762	0.653	0.854	12.678	2.253	44.53	36.94	1660	1660	0.957	12.922	-1.505	0.958	4.141	0.868	60.5
1000S250-54	0.0566	50	0.896	3.05	12.681	2.536	3.762	0.653	0.854	12.678	1.822	54.55	47.66	1660	1660	0.957	12.922	-1.505	0.958	4.141	0.868	49.1
1000S250-68	0.0713	50	1.121	3.81	15.756	3.151	3.749	0.799	0.844	15.753	2.736	81.93	65.86	3345	3345	1.899	15.909	-1.488	0.950	4.121	0.870	48.8
1000S250-97	0.1017	50	1.576	5.36	21.834	4.367	3.722	1.073	0.825	21.831	4.202	125.80	107.14	9862	7175	5.433	21.632	-1.454	0.932	4.080	0.873	45.6
1000S250-118	0.1242	50	1.904	6.48	26.088	5.218	3.702	1.251	0.811	26.088	5.185	155.25	139.63	16239	9539	9.788	25.490	-1.428	0.918	4.050	0.876	44.8
1000S300-54	0.0566	33	0.953	3.24	14.080	2.816	3.845	1.024	1.037	13.964	2.272	44.90	38.27	1660	1660	1.017	19.888	-1.892	1.185	4.409	0.816	71.5
1000S300-54	0.0566	50	0.953	3.24	14.080	2.816	3.845	1.024	1.037	13.521	1.832	54.85	49.12	1660	1660	1.017	19.888	-1.892	1.185	4.409	0.816	58.0
1000S300-68	0.0713	50	1.192	4.06	17.513	3.503	3.833	1.258	1.027	17.119	2.746	82.23	68.23	3345	3345	2.020	24.551	-1.874	1.176	4.389	0.818	57.8
1000S300-97	0.1017	50	1.677	5.71	24.325	4.865	3.808	1.703	1.007	23.992	4.490	134.43	111.66	9862	7175	5.783	33.570	-1.838	1.158	4.347	0.821	57.4
1000S300-118	0.1242	50	2.028	6.90	29.117	5.823	3.789	1.998	0.993	29.117	5.586	167.24	146.34	16239	9539	10.427	39.725	-1.811	1.144	4.316	0.824	53.8
1000S350-54	0.0566	33	1.052	3.58	16.223	3.245	3.928	1.768	1.297	15.965	2.741	54.16	47.21	1660	1660	1.123	36.575	-2.546	1.566	4.857	0.725	88.9
1000S350-54	0.0566	50	1.052	3.58	16.223	3.245	3.928	1.768	1.297	15.626	2.267	67.88	60.89	1660	1660	1.123	36.575	-2.546	1.566	4.857	0.725	72.2
1000S350-68	0.0713	50	1.317	4.48	20.209	4.042	3.917	2.185	1.288	20.056	3.379	101.16	83.89	3345	3345	2.232	45.277	-2.529	1.557	4.837	0.727	72.0
1000S350-97	0.1017	50	1.855	6.31	28.154	5.631	3.895	2.992	1.270	28.152	5.110	153.00	135.86	9862	7175	6.397	62.280	-2.492	1.538	4.795	0.730	71.6
1000S350-118	0.1242	50	2.245	7.64	33.780	6.756	3.879	3.544	1.256	33.780	6.486	194.19	176.74	16239	9539	11.544	74.030	-2.465	1.524	4.764	0.732	67.8
1200S162-541	0.0566	33	0.896	3.05	15.736	2.623	4.191	0.212	0.486	14.772	2.064	34.05	29.26	1377	1102	0.957	6.340	-0.732	0.493	4.282	0.971	37.5
1200S162-541	0.0566	50	0.896	3.05	15.736	2.623	4.191	0.212	0.486	14.330	1.870	46.76	37.52	1377	1102	0.957	6.340	-0.732	0.493	4.282	0.971	30.5
1200S162-68	0.0713	50	1.121	3.81	19.526	3.254	4.174	0.255	0.477	18.424	2.591	77.58	63.20	2770	2770	1.899	7.739	-0.719	0.485	4.262	0.972	30.2
1200S162-97	0.1017	50	1.576	5.36	26.977	4.496	4.138	0.332	0.459	26.754	4.056	121.43	105.38	8145	7410	5.433	10.331	-0.691	0.470	4.220	0.973	29.5
1200S162-118	0.1242	50	1.904	6.48	32.158	5.360	4.110	0.377	0.445	32.154	5.151	154.22	138.87	14982	11034	9.788	12.002	-0.670	0.459	4.188	0.974	29.0
1200S200-541	0.0566	33	0.953	3.24	17.668	2.945	4.307	0.394	0.643	16.700	2.383	39.32	34.44	1377	1102	1.017	11.550	-1.032	0.681	4.475	0.947	48.0
1200S200-541	0.0566	50	0.953	3.24	17.668	2.945	4.307	0.394	0.643	16.361	2.031	50.77	44.30	1377	1102	1.017	11.550	-1.032	0.681	4.475	0.947	39.0
1200S200-68	0.0713	50	1.192	4.06	21.955	3.659	4.291	0.479	0.634	20.892	2.911	87.15	73.93	2770	2770	2.020	14.176	-1.017	0.673	4.456	0.948	38.7
1200S200-97	0.1017	50	1.677	5.71	30.428	5.071	4.259	0.635	0.615	30.191	4.626	138.51	121.84	8145	7410	5.783	19.150	-0.987	0.656	4.415	0.950	38.1
1200S200-118	0.1242	50	2.028	6.90	36.361	6.060	4.235	0.733	0.601	36.356	5.848	175.09	159.83	14982	11034	10.427	22.451	-0.964	0.644	4.384	0.952	37.7
1200S250-541	0.0566	33	1.009	3.43	19.687	3.281	4.417	0.683	0.823	18.858	2.429	40.08	36.91	1377	1102	1.078	19.505	-1.378	0.892	4.699	0.914	59.5
1200S250-541	0.0566	50	1.009	3.43	19.687	3.281	4.417	0.683	0.823	18.511	2.108	52.69	47.35	1377	1102	1.078	19.505	-1.378	0.892	4.699	0.914	48.3
1200S250-68	0.0713	50	1.263	4.30	24.491	4.082	4.403	0.836	0.813	23.610	2.938	87.95	79.05	2770	2770	2.141	24.034	-1.362	0.884	4.680	0.915	48.1
1200S250-97	0.1017	50	1.779	6.05	34.027	5.671	4.373	1.122	0.794	33.851	4.998	149.63	130.54	8145	7410	6.134	32.734	-1.329	0.867	4.639	0.918	47.5
1200S250-118	0.1242	50	2.152	7.32	40.740	6.790	4.351	1.308	0.780	40.736	6.537	195.71	171.85	14982	11034	11.065	38.619	-1.305	0.854	4.609	0.920	47.1
1200S300-541	0.0566	33	1.066	3.63	21.705	3.618	4.513	1.074	1.004	21.700	2.673	44.11	38.41	1377	1102	1.138	30.051	-1.743	1.111	4.941	0.876	70.7
1200S300-541	0.0566	50	1.066	3.63	21.705	3.618	4.513	1.074	1.004	21.256	2.180	54.49	49.11	1377	1102	1.138	30.051	-1.743	1.111	4.941	0.876	57.4
1200S300-68	0.0713	50	1.335	4.54	27.028	4.505	4.500	1.320	0.994	26.553	3.233	96.80	82.33	2770	2770	2.262	37.126	-1.726	1.103	4.921	0.877	57.2
1200S300-97	0.1017	50	1.881	6.40	37.627	6.271	4.473	1.787	0.975	37.110	5.822	174.32	136.41	8145	7410	6.484	50.853	-1.691	1.085	4.880	0.880	56.7
1200S300-118	0.1242	50	2.276	7.74	45.119	7.520	4.452	2.096	0.960	45.115	7.234	216.59	180.23	14982	11034	11.704	60.251	-1.666	1.071	4.850	0.882	53.0
1200S350-541	0.0566	33	1.165	3.96	24.866	4.144	4.620	1.866	1.266	24.649	3.244	53.52	47.72	1377	1102	1.244	54.279	-2.363	1.478	5.342	0.804	71.4
1200S350-541	0.0566	50	1.165	3.96	24.866	4.144	4.620	1.866	1.266	24.159	2.707	67.67	61.32	1377	1102	1.244	54.279	-2.363	1.478	5.342	0.804	71.4
1200S350-68	0.0713	50	1.460	4.97	31.004	5.167	4.609	2.306	1.257	30.967	3.995	119.62	101.62	2770	2770	2.473	67.251	-2.346	1.469	5.322	0.806	71.2
1200S350-97	0.1017	50	2.059	7.00	43.280	7.213	4.585	3.159	1.239	43.274	6.582	197.06	166.00	8145	7410	7.098	92.672	-2.310	1.450	5.281	0.809	70.8
1200S350-118	0.1242	50	2.494	8.48	52.006	8.668	4.567	3.742	1.225	52.002	8.334	249.52	217.31	14982	11034	12.821	110.302	-2.284	1.436	5.251	0.811	66.9
1400S200-541	0.0566	33	1.066	3.63	25.961	3.709	4.936	0.406	0.617	23.813	2.805	46.29	39.15	1176	941	1.138	16.355	-0.946	0.633	5.063	0.965	47.0
1400S200-541	0.0566	50	1.066	3.63	25.961	3.709	4.936	0.406	0.617	23.230	2.405	60.12	50.03	1176	941	1.138	16.355	-0.946	0.633	5.063	0.965	38.2
1400S200-68	0.0713	50	1.335	4.54	32.297	4.614	4.919	0.494	0.608	29.856	3.428	102.64	84.29	2364	2364	2.262	20.083	-0.932	0.625	5.043	0.966	37.9
1400S200-97	0.1017	50	1.881	6.40	44.870	6.410	4.884	0.655	0.590	43.652	5.522	165.31	141.26	6938	6938	6.484	27.156	-0.904	0.609	5.002	0.967	37.3
1400S200-118	0.1242	50	2.276	7.74	53.719	7.674	4.858	0.756	0.576	53.546	7.057	211.27	187.34	12743	11285	11.704	31.861	-0.883	0.598	4.971	0.968	36.8
1400S250-541	0.0566	33	1.122	3.82	28.712	4.102	5.058	0.707	0.794	26.804	2.861	47.21	42.34	1176	941	1.198	27.675	-1.272	0.835	5.275	0.942	58.6
1400S250-541	0.0566	50	1.122	3.82	28.712	4.102	5.058	0.707	0.794	26.210	2.494	62.35	54.05	1176	941	1.198	27.675	-1.272	0.835	5.275	0.942	47.6
1400S250-68	0.0713	50	1.406	4.78	35.755	5.108	5.043	0.865	0.784	33.627	3.467	103.80	91.04	2364	2364	2.383	34.118	-1.257	0.827	5.256	0.943	47.3
1400S250-97	0.1017	50	1.983	6.74	49.781	7.112	5.011	1.161	0.765	48.686	5.945	178.00	152.50	6938	6938	6.835	46.520	-1.225	0.811	5.215	0.945	46.7
1400S250-118	0.1242	50	2.400	8.17	59.697	8.528	4.987	1.353	0.751	59.522	7.854	235.15	202.61	12743	11285	12.342	54.927	-1.203	0.798	5.185	0.946	46.2
1400S300-541	0.0566	33	1.179	4.01	31.463	4.495	5.166	1.115	0.972	29.726	2.956	48.78	44.43	1176	941	1.259	42.690	-1.617	1.046	5.500	0.914	69.9
1400S300-541	0.0566	50	1.179	4.01	31.463	4.495	5.166	1.115	0.972	27.327	2.553	63.82	56.59	1176	941	1.259	42.690	-1.617	1.046	5.500	0.914	56.8
1400S300-68	0.0713	50	1.477	5.03	39.213	5.602	5.152	1.370	0.963	36.428	3.574	107.01	95.45	2364	2364	2.503	52.772	-1.601	1.038	5.480	0.915	56.5
1400S300-97	0.1017	50	2.084	7.09	54.692	7.813	5.123	1.854	0.943	53.380	6.302	188.69	160.22	6938	6938	7.186	72.365	-1.568	1.020	5.440	0.917	55.9
1400S300-118	0.1242	50	2.525	8.59	65.676	9.382	5.100	2.175	0.928	65.596	8.376	250.77	213.33	12743	11285	12.981	85.812	-1.544	1.008	5.409	0.919	55.5

1 Web-height to thickness ratio exceeds 200. Web Stiffeners are required at all support points and concentrated loads.

2 When web height-to thickness ratio exceeds 260, or flange width-to-thickness rato exceeds 60, effective properties are not calculated (limitations in AISI Section B4.1).

See Section Properties Table Notes

Structural (S) Stud Section Properties

Member	Design Thickness (in)	Fy (ksi)	Gross Properties							Effective Properties						Torsional Properties						
			Area (in^2)	Weight (lb/ft)	I_x (in^4)	S_x (in^3)	R_x (in)	I_y (in^4)	R_y (in)	I_x (in^4)	S_x (in^3)	M_a (in-k)	M_{ad} (in-k)	Va_B (lb)	Va_{net} (lb)	Jx1000 (in4)	C_w (in6)	X_o (in)	m (in)	R_o (in)	β	L_u (in)
1600S250-97	0.1017	50	2.186	7.44	69.503	8.688	5.639	1.193	0.739	66.649	6.888	206.22	172.62	6042	6042	7.536	63.082	-1.138	0.762	5.800	0.962	45.9
1600S250-118	0.1242	50	2.649	9.01	83.459	10.432	5.613	1.390	0.724	81.961	9.167	274.47	231.24	11086	11086	13.620	74.524	-1.116	0.750	5.769	0.963	45.4
1600S300-681	0.0713	50	1.620	5.51	54.355	6.794	5.793	1.411	0.933	49.256	4.143	103.58	89.73	2062	1649	2.745	71.608	-1.494	0.981	6.055	0.939	55.8
1600S300-97	0.1017	50	2.288	7.78	75.929	9.491	5.761	1.910	0.914	72.942	7.291	218.29	182.59	6042	6042	7.887	98.275	-1.463	0.964	6.014	0.941	55.1
1600S300-118	0.1242	50	2.773	9.43	91.284	11.411	5.738	2.240	0.899	89.961	9.756	292.10	244.86	11086	11086	14.258	116.606	-1.439	0.951	5.983	0.942	54.7
1600S350-68[1]	0.0713	50	1.745	5.94	61.641	7.705	5.944	2.490	1.195	57.601	5.104	127.59	112.58	2062	1649	2.957	127.370	-2.055	1.322	6.402	0.897	69.7
1600S350-97	0.1017	50	2.466	8.39	86.296	10.787	5.916	3.410	1.176	83.748	8.285	248.05	223.83	6042	6042	8.501	175.895	-2.022	1.304	6.362	0.899	69.1
1600S350-118	0.1242	50	2.990	10.17	103.924	12.990	5.895	4.039	1.162	102.57	11.236	336.42	296.35	11086	11086	15.376	209.692	-1.998	1.291	6.332	0.900	68.8



1 Web-height to thickness ratio exceeds 200. Web Stiffeners are required at all support points and concentrated loads.

2 When web height-to thickness ratio exceeds 260, or flange width-to-thickness rato exceeds 60, effective properties are not calculated (limitations in AISI Section B4.1).

See Section Properties Table Notes

(T) Track Section Properties

Member	Design Thickness (in)	Fy (ksi)	Gross Properties							Effective Properties				Torsional Properties					
			Area (in^2)	Weight (lb/ft)	I_x (in^4)	S_x (in^3)	R_x (in)	I_y (in^4)	R_y (in)	I_x (in^4)	S_x (in^3)	M_a (in-k)	Va_a (lb)	Jx1000 (in4)	C_w (in^6)	X_o (in)	m (in)	R_o (in)	β
162T125-18	0.0188	33	0.078	0.26	0.042	0.048	0.733	0.013	0.411	0.030	0.025	0.42	302	0.0091	0.007	-0.876	0.503	1.215	0.479
162T125-27	0.0283	33	0.117	0.40	0.063	0.072	0.735	0.020	0.410	0.051	0.044	0.87	541	0.0312	0.010	-0.872	0.501	1.211	0.482
162T125-30	0.0312	33	0.129	0.44	0.070	0.079	0.735	0.022	0.409	0.058	0.051	1.00	597	0.0417	0.012	-0.870	0.500	1.210	0.483
162T125-33	0.0346	33	0.143	0.49	0.077	0.087	0.736	0.024	0.408	0.066	0.059	1.16	663	0.0569	0.013	-0.868	0.499	1.209	0.484
250T125-18	0.0188	33	0.094	0.32	0.104	0.079	1.052	0.015	0.400	0.078	0.044	0.73	245	0.0111	0.018	-0.767	0.460	1.362	0.682
250T125-27	0.0283	33	0.141	0.48	0.157	0.119	1.053	0.022	0.398	0.129	0.079	1.56	685	0.0378	0.027	-0.763	0.457	1.360	0.685
250T125-30	0.0312	33	0.156	0.53	0.173	0.131	1.053	0.025	0.397	0.146	0.090	1.77	833	0.0506	0.030	-0.762	0.456	1.359	0.686
250T125-33	0.0346	33	0.173	0.59	0.192	0.145	1.054	0.027	0.397	0.166	0.103	2.04	1024	0.0690	0.033	-0.760	0.456	1.358	0.687
250T125-43	0.0451	33	0.225	0.77	0.250	0.188	1.055	0.035	0.395	0.231	0.148	2.92	1356	0.1526	0.042	-0.755	0.453	1.356	0.690
250T125-54	0.0566	33	0.282	0.96	0.318	0.236	1.062	0.043	0.392	0.311	0.204	4.03	1692	0.3015	0.054	-0.749	0.449	1.357	0.696
250T125-54	0.0566	50	0.282	0.96	0.318	0.236	1.062	0.043	0.392	0.297	0.189	5.66	2563	0.3015	0.054	-0.749	0.449	1.357	0.696
250T125-68	0.0713	33	0.355	1.21	0.409	0.297	1.072	0.054	0.389	0.409	0.283	5.58	2112	0.6022	0.069	-0.740	0.444	1.360	0.704
250T125-68	0.0713	50	0.355	1.21	0.409	0.297	1.072	0.054	0.389	0.404	0.263	7.89	3199	0.6022	0.069	-0.740	0.444	1.360	0.704
250T150-27	0.0283	33	0.156	0.53	0.181	0.137	1.078	0.037	0.486	0.139	0.082	1.61	685	0.0415	0.044	-0.976	0.575	1.534	0.595
250T150-30	0.0312	33	0.172	0.58	0.200	0.151	1.078	0.040	0.486	0.157	0.093	1.84	833	0.0557	0.049	-0.975	0.574	1.533	0.595
250T150-33	0.0346	33	0.190	0.65	0.221	0.167	1.079	0.045	0.485	0.180	0.107	2.11	1024	0.0759	0.054	-0.973	0.573	1.532	0.596
250T150-43	0.0451	33	0.248	0.84	0.289	0.217	1.080	0.058	0.483	0.253	0.154	3.04	1356	0.1679	0.070	-0.968	0.570	1.529	0.599
250T150-54	0.0566	33	0.311	1.06	0.368	0.273	1.088	0.072	0.481	0.343	0.214	4.24	1692	0.3317	0.089	-0.961	0.566	1.530	0.605
250T150-54	0.0566	50	0.311	1.06	0.368	0.273	1.088	0.072	0.481	0.325	0.198	5.92	2563	0.3317	0.089	-0.961	0.566	1.530	0.605
250T150-68	0.0713	33	0.391	1.33	0.472	0.344	1.099	0.089	0.478	0.467	0.301	5.95	2112	0.6627	0.114	-0.953	0.561	1.531	0.613
250T150-68	0.0713	50	0.391	1.33	0.472	0.344	1.099	0.089	0.478	0.447	0.278	8.32	3199	0.6627	0.114	-0.953	0.561	1.531	0.613
250T200-33	0.0346	33	0.225	0.76	0.280	0.212	1.117	0.097	0.658	0.203	0.113	2.23	1024	0.0897	0.118	-1.418	0.813	1.922	0.455
250T200-43	0.0451	33	0.293	1.00	0.366	0.275	1.119	0.126	0.656	0.289	0.163	3.22	1356	0.1985	0.153	-1.413	0.810	1.918	0.457
250T200-54	0.0566	33	0.367	1.25	0.466	0.346	1.127	0.157	0.654	0.397	0.229	4.53	1692	0.3921	0.195	-1.405	0.806	1.917	0.462
250T200-54	0.0566	50	0.367	1.25	0.466	0.346	1.127	0.157	0.654	0.373	0.210	6.28	2563	0.3921	0.195	-1.405	0.806	1.917	0.462
250T200-68	0.0713	33	0.462	1.57	0.600	0.437	1.139	0.196	0.652	0.550	0.326	6.45	2112	0.7835	0.251	-1.396	0.800	1.916	0.469
250T200-68	0.0713	50	0.462	1.57	0.600	0.437	1.139	0.196	0.652	0.519	0.298	8.91	3199	0.7835	0.251	-1.396	0.800	1.916	0.469
350T125-18	0.0188	33	0.113	0.38	0.220	0.121	1.395	0.017	0.382	0.174	0.062	1.02	173	0.0133	0.038	-0.675	0.418	1.596	0.821
350T125-27	0.0283	33	0.170	0.58	0.331	0.182	1.396	0.025	0.381	0.278	0.128	2.53	590	0.0453	0.057	-0.670	0.416	1.595	0.823
350T125-30	0.0312	33	0.187	0.64	0.365	0.200	1.396	0.027	0.380	0.313	0.145	2.87	790	0.0607	0.063	-0.669	0.415	1.594	0.824
350T125-33	0.0346	33	0.207	0.71	0.405	0.222	1.397	0.030	0.379	0.355	0.166	3.27	1024	0.0828	0.070	-0.668	0.414	1.594	0.824
350T125-43	0.0451	33	0.270	0.92	0.528	0.288	1.398	0.038	0.377	0.490	0.234	4.61	1740	0.1832	0.090	-0.663	0.412	1.592	0.826
350T125-54	0.0566	33	0.339	1.15	0.668	0.361	1.404	0.048	0.375	0.652	0.318	6.28	2392	0.3619	0.114	-0.658	0.408	1.595	0.830
350T125-54	0.0566	50	0.339	1.15	0.668	0.361	1.404	0.048	0.375	0.627	0.298	8.92	3372	0.3619	0.114	-0.658	0.408	1.595	0.830
350T125-68	0.0713	33	0.427	1.45	0.851	0.454	1.412	0.059	0.372	0.851	0.434	8.57	2994	0.7231	0.144	-0.650	0.403	1.599	0.835
350T125-68	0.0713	50	0.427	1.45	0.851	0.454	1.412	0.059	0.372	0.840	0.408	12.22	4536	0.7231	0.144	-0.650	0.403	1.599	0.835
350T125-97	0.1017	33	0.608	2.07	1.243	0.645	1.430	0.081	0.366	1.244	0.645	14.57	4213	2.0960	0.209	-0.636	0.394	1.607	0.844
350T125-97	0.1017	50	0.608	2.07	1.243	0.645	1.430	0.081	0.366	1.244	0.645	21.51	6383	2.0960	0.209	-0.636	0.394	1.607	0.844
350T150-27	0.0283	33	0.184	0.63	0.377	0.207	1.432	0.041	0.470	0.298	0.133	2.62	590	0.0491	0.094	-0.869	0.529	1.739	0.751
350T150-30	0.0312	33	0.203	0.69	0.416	0.228	1.432	0.045	0.470	0.336	0.150	2.97	790	0.0658	0.103	-0.867	0.528	1.739	0.751
350T150-33	0.0346	33	0.225	0.76	0.461	0.253	1.432	0.049	0.469	0.382	0.172	3.39	1024	0.0897	0.114	-0.866	0.527	1.738	0.752
350T150-43	0.0451	33	0.293	1.00	0.601	0.329	1.433	0.064	0.467	0.531	0.243	4.81	1740	0.1985	0.148	-0.861	0.525	1.736	0.754
350T150-54	0.0566	33	0.367	1.25	0.762	0.412	1.440	0.079	0.465	0.713	0.333	6.59	2392	0.3921	0.187	-0.855	0.521	1.738	0.758
350T150-54	0.0566	50	0.367	1.25	0.762	0.412	1.440	0.079	0.465	0.680	0.311	9.30	3372	0.3921	0.187	-0.855	0.521	1.738	0.758
350T150-68	0.0713	33	0.462	1.57	0.972	0.518	1.450	0.099	0.462	0.959	0.460	9.10	2994	0.7835	0.238	-0.847	0.516	1.742	0.763
350T150-68	0.0713	50	0.462	1.57	0.972	0.518	1.450	0.099	0.462	0.921	0.429	12.85	4536	0.7835	0.238	-0.847	0.516	1.742	0.763
350T150-97	0.1017	33	0.659	2.24	1.423	0.738	1.469	0.137	0.456	1.423	0.738	15.72	4213	2.2713	0.346	-0.831	0.506	1.749	0.774
350T150-97	0.1017	50	0.659	2.24	1.423	0.738	1.469	0.137	0.456	1.423	0.704	21.08	6383	2.2713	0.346	-0.831	0.506	1.749	0.774
350T200-33	0.0346	33	0.259	0.88	0.574	0.315	1.488	0.108	0.646	0.429	0.181	3.58	1024	0.1035	0.249	-1.285	0.761	2.069	0.614
350T200-43	0.0451	33	0.338	1.15	0.749	0.409	1.489	0.140	0.645	0.601	0.258	5.10	1740	0.2291	0.323	-1.280	0.758	2.067	0.616
350T200-54	0.0566	33	0.424	1.44	0.949	0.513	1.497	0.175	0.642	0.815	0.356	7.03	2392	0.4526	0.409	-1.273	0.754	2.067	0.621
350T200-54	0.0566	50	0.424	1.44	0.949	0.513	1.497	0.175	0.642	0.771	0.330	9.87	3372	0.4526	0.409	-1.273	0.754	2.067	0.621
350T200-68	0.0713	33	0.534	1.82	1.213	0.647	1.508	0.218	0.639	1.114	0.498	9.84	2994	0.9043	0.522	-1.264	0.749	2.069	0.627
350T200-68	0.0713	50	0.534	1.82	1.213	0.647	1.508	0.218	0.639	1.057	0.460	13.76	4536	0.9043	0.522	-1.264	0.749	2.069	0.627
350T200-97	0.1017	33	0.761	2.59	1.781	0.924	1.530	0.305	0.633	1.782	0.835	16.50	4213	2.6219	0.765	-1.247	0.738	2.073	0.638
350T200-97	0.1017	50	0.761	2.59	1.781	0.924	1.530	0.305	0.633	1.713	0.773	23.14	6383	2.6219	0.765	-1.247	0.738	2.073	0.638

1 Web-height to thickness ratio exceeds 200. Web stiffeners are required at all support points and concentrated loads.

See Section Properties Table Notes

(T) Track Section Properties

Member	Design Thickness (in)	Fy (ksi)	Gross Properties							Effective Properties				Torsional Properties					
			Area (in^2)	Weight (lb/ft)	I_x (in^4)	S_x (in^3)	R_x (in)	I_y (in^4)	R_y (in)	I_x (in^4)	S_x (in^3)	M_a (in-k)	Va_a (lb)	Jx1000 (in4)	C_w (in^6)	X_o (in)	m (in)	R_o (in)	β
362T125-18	0.0188	33	0.115	0.39	0.238	0.127	1.437	0.017	0.380	0.189	0.064	1.05	167	0.0136	0.042	-0.665	0.413	1.628	0.833
362T125-27	0.0283	33	0.173	0.59	0.358	0.191	1.438	0.025	0.378	0.301	0.135	2.67	569	0.0463	0.062	-0.661	0.411	1.627	0.835
362T125-30	0.0312	33	0.191	0.65	0.395	0.210	1.438	0.027	0.378	0.339	0.153	3.02	762	0.0620	0.068	-0.659	0.410	1.627	0.836
362T125-33	0.0346	33	0.212	0.72	0.438	0.232	1.439	0.030	0.377	0.385	0.174	3.44	1024	0.0845	0.076	-0.658	0.410	1.626	0.836
362T125-43	0.0451	33	0.276	0.94	0.571	0.302	1.439	0.039	0.375	0.531	0.245	4.85	1740	0.1870	0.098	-0.654	0.407	1.625	0.838
362T125-54	0.0566	33	0.346	1.18	0.723	0.378	1.445	0.048	0.373	0.706	0.333	6.59	2480	0.3695	0.123	-0.648	0.404	1.627	0.841
362T125-54	0.0566	50	0.346	1.18	0.723	0.378	1.445	0.048	0.373	0.679	0.313	9.36	3372	0.3695	0.123	-0.648	0.404	1.627	0.841
362T125-68	0.0713	33	0.436	1.48	0.921	0.475	1.454	0.060	0.370	0.921	0.455	8.98	3104	0.7382	0.156	-0.641	0.399	1.631	0.846
362T125-68	0.0713	50	0.436	1.48	0.921	0.475	1.454	0.060	0.370	0.909	0.428	12.82	4703	0.7382	0.156	-0.641	0.399	1.631	0.846
362T125-97	0.1017	33	0.621	2.11	1.344	0.675	1.471	0.082	0.364	1.344	0.675	15.25	4370	2.1398	0.226	-0.626	0.390	1.640	0.854
362T125-97	0.1017	50	0.621	2.11	1.344	0.675	1.471	0.082	0.364	1.344	0.675	22.49	6622	2.1398	0.226	-0.626	0.390	1.640	0.854
362T150-27	0.0283	33	0.187	0.64	0.408	0.217	1.475	0.041	0.468	0.323	0.140	2.76	569	0.0500	0.102	-0.857	0.524	1.769	0.765
362T150-30	0.0312	33	0.207	0.70	0.450	0.239	1.475	0.045	0.467	0.364	0.158	3.12	762	0.0670	0.112	-0.856	0.523	1.768	0.766
362T150-33	0.0346	33	0.229	0.78	0.499	0.264	1.475	0.050	0.467	0.414	0.181	3.57	1024	0.0914	0.124	-0.854	0.522	1.768	0.766
362T150-43	0.0451	33	0.298	1.02	0.650	0.344	1.476	0.064	0.465	0.575	0.256	5.05	1740	0.2023	0.160	-0.850	0.519	1.766	0.768
362T150-54	0.0566	33	0.374	1.27	0.823	0.431	1.483	0.080	0.462	0.771	0.350	6.91	2480	0.3997	0.202	-0.844	0.516	1.768	0.772
362T150-54	0.0566	50	0.374	1.27	0.823	0.431	1.483	0.080	0.462	0.736	0.326	9.77	3372	0.3997	0.202	-0.844	0.516	1.768	0.772
362T150-68	0.0713	33	0.471	1.60	1.050	0.542	1.493	0.100	0.460	1.036	0.482	9.53	3104	0.7986	0.257	-0.836	0.511	1.771	0.777
362T150-68	0.0713	50	0.471	1.60	1.050	0.542	1.493	0.100	0.460	0.995	0.450	13.47	4703	0.7986	0.257	-0.836	0.511	1.771	0.777
362T150-97	0.1017	33	0.672	2.28	1.535	0.771	1.512	0.138	0.453	1.536	0.771	16.41	4370	2.3152	0.374	-0.820	0.501	1.779	0.787
362T150-97	0.1017	50	0.672	2.28	1.535	0.771	1.512	0.138	0.453	1.536	0.736	22.04	6622	2.3152	0.374	-0.820	0.501	1.779	0.787
362T200-33	0.0346	33	0.264	0.90	0.619	0.329	1.533	0.110	0.645	0.464	0.191	3.76	1024	0.1052	0.269	-1.270	0.754	2.092	0.631
362T200-43	0.0451	33	0.343	1.17	0.808	0.427	1.534	0.142	0.643	0.650	0.271	5.35	1740	0.2329	0.350	-1.265	0.752	2.090	0.633
362T200-54	0.0566	33	0.431	1.47	1.024	0.536	1.542	0.177	0.640	0.881	0.373	7.37	2480	0.4601	0.442	-1.259	0.748	2.091	0.638
362T200-54	0.0566	50	0.431	1.47	1.024	0.536	1.542	0.177	0.640	0.833	0.346	10.37	3372	0.4601	0.442	-1.259	0.748	2.091	0.638
362T200-68	0.0713	33	0.543	1.85	1.308	0.675	1.552	0.221	0.638	1.202	0.521	10.30	3104	0.9194	0.564	-1.250	0.743	2.093	0.643
362T200-68	0.0713	50	0.543	1.85	1.308	0.675	1.552	0.221	0.638	1.141	0.482	14.42	4703	0.9194	0.564	-1.250	0.743	2.093	0.643
362T200-97	0.1017	33	0.773	2.63	1.917	0.963	1.575	0.308	0.632	1.918	0.872	17.23	4370	2.6658	0.825	-1.232	0.732	2.097	0.655
362T200-97	0.1017	50	0.773	2.63	1.917	0.963	1.575	0.308	0.632	1.845	0.808	24.18	6622	2.6658	0.825	-1.232	0.732	2.097	0.655
400T125-181	0.0188	33	0.122	0.42	0.298	0.145	1.562	0.017	0.374	0.241	0.070	1.16	151	0.0144	0.052	-0.637	0.400	1.727	0.864
400T125-27	0.0283	33	0.184	0.63	0.449	0.217	1.562	0.025	0.372	0.380	0.156	3.08	515	0.0491	0.078	-0.633	0.398	1.726	0.866
400T125-30	0.0312	33	0.203	0.69	0.495	0.239	1.563	0.028	0.371	0.427	0.177	3.49	689	0.0658	0.085	-0.632	0.397	1.726	0.866
400T125-33	0.0346	33	0.225	0.76	0.549	0.265	1.563	0.031	0.371	0.484	0.201	3.98	939	0.0897	0.095	-0.630	0.396	1.725	0.867
400T125-43	0.0451	33	0.293	1.00	0.716	0.344	1.564	0.040	0.369	0.667	0.282	5.58	1740	0.1985	0.122	-0.626	0.394	1.724	0.868
400T125-54	0.0566	33	0.367	1.25	0.904	0.431	1.569	0.049	0.366	0.884	0.382	7.54	2740	0.3921	0.154	-0.621	0.390	1.727	0.871
400T125-54	0.0566	50	0.367	1.25	0.904	0.431	1.569	0.049	0.366	0.851	0.359	10.76	3372	0.3921	0.154	-0.621	0.390	1.727	0.871
400T125-68	0.0713	33	0.462	1.57	1.151	0.541	1.577	0.061	0.364	1.151	0.519	10.25	3435	0.7835	0.194	-0.614	0.386	1.731	0.874
400T125-68	0.0713	50	0.462	1.57	1.151	0.541	1.577	0.061	0.364	1.136	0.490	14.66	5205	0.7835	0.194	-0.614	0.386	1.731	0.874
400T125-97	0.1017	33	0.659	2.24	1.674	0.768	1.594	0.084	0.358	1.674	0.769	17.36	4842	2.2713	0.280	-0.600	0.377	1.740	0.881
400T125-97	0.1017	50	0.659	2.24	1.674	0.768	1.594	0.084	0.358	1.674	0.769	25.54	7337	2.2713	0.280	-0.600	0.377	1.740	0.881
400T150-27	0.0283	33	0.198	0.67	0.509	0.246	1.602	0.042	0.461	0.409	0.154	3.05	515	0.0529	0.127	-0.824	0.509	1.860	0.804
400T150-30	0.0312	33	0.218	0.74	0.561	0.271	1.603	0.046	0.461	0.458	0.183	3.61	689	0.0708	0.140	-0.823	0.508	1.860	0.804
400T150-33	0.0346	33	0.242	0.82	0.622	0.300	1.603	0.051	0.460	0.520	0.209	4.12	939	0.0966	0.155	-0.821	0.507	1.859	0.805
400T150-43	0.0451	33	0.315	1.07	0.811	0.390	1.604	0.066	0.458	0.720	0.294	5.81	1740	0.2138	0.200	-0.817	0.504	1.857	0.807
400T150-54	0.0566	33	0.396	1.35	1.026	0.489	1.610	0.082	0.456	0.962	0.400	7.90	2740	0.4223	0.252	-0.811	0.501	1.860	0.810
400T150-54	0.0566	50	0.396	1.35	1.026	0.489	1.610	0.082	0.456	0.920	0.375	11.22	3372	0.4223	0.252	-0.811	0.501	1.860	0.810
400T150-68	0.0713	33	0.498	1.69	1.306	0.615	1.619	0.102	0.453	1.288	0.549	10.85	3435	0.8439	0.320	-0.804	0.496	1.864	0.814
400T150-68	0.0713	50	0.498	1.69	1.306	0.615	1.619	0.102	0.453	1.239	0.514	15.40	5205	0.8439	0.320	-0.804	0.496	1.864	0.814
400T150-97	0.1017	33	0.710	2.41	1.904	0.874	1.638	0.142	0.447	1.904	0.874	18.56	4842	2.4466	0.463	-0.788	0.487	1.872	0.823
400T150-97	0.1017	50	0.710	2.41	1.904	0.874	1.638	0.142	0.447	1.904	0.836	25.02	7337	2.4466	0.463	-0.788	0.487	1.872	0.823

1 Web-height to thickness ratio exceeds 200. Web Stiffeners are required at all support points and concentrated loads.

2 When web height-to thickness ratio exceeds 260, or flange width-to-thickness rato exceeds 60, effective properties are not calculated (limitations in AISI Section B4.1).

See Section Properties Table Notes

(T) Track Section Properties

Member	Design Thickness (in)	Fy (ksi)	Gross Properties							Effective Properties				Torsional Properties					
			Area (in^2)	Weight (lb/ft)	I_x (in^4)	S_x (in^3)	R_x (in)	I_y (in^4)	R_y (in)	I_x (in^4)	S_x (in^3)	M_a (in-k)	Va_a (lb)	Jx1000 (in4)	C_w (in^6)	X_o (in)	m (in)	R_o (in)	β
400T200-33	0.0346	33	0.277	0.94	0.768	0.371	1.666	0.113	0.639	0.581	0.220	4.35	939	0.1104	0.336	-1.229	0.737	2.167	0.678
400T200-43	0.0451	33	0.360	1.23	1.002	0.482	1.668	0.146	0.637	0.812	0.311	6.15	1740	0.2443	0.436	-1.224	0.734	2.164	0.680
400T200-54	0.0566	33	0.452	1.54	1.268	0.604	1.675	0.182	0.635	1.095	0.427	8.44	2740	0.4828	0.551	-1.217	0.730	2.166	0.684
400T200-54	0.0566	50	0.452	1.54	1.268	0.604	1.675	0.182	0.635	1.038	0.398	11.90	3372	0.4828	0.551	-1.217	0.730	2.166	0.684
400T200-68	0.0713	33	0.569	1.94	1.617	0.761	1.685	0.227	0.632	1.488	0.593	11.72	3435	0.9647	0.702	-1.209	0.725	2.168	0.689
400T200-68	0.0713	50	0.569	1.94	1.617	0.761	1.685	0.227	0.632	1.415	0.550	16.47	5205	0.9647	0.702	-1.209	0.725	2.168	0.689
400T200-97	0.1017	33	0.811	2.76	2.364	1.085	1.707	0.318	0.626	2.365	0.985	19.47	4842	2.7973	1.022	-1.192	0.715	2.174	0.699
400T200-97	0.1017	50	0.811	2.76	2.364	1.085	1.707	0.318	0.626	2.275	0.915	27.41	7337	2.7973	1.022	-1.192	0.715	2.174	0.699
550T125-27	0.0283	33	0.226	0.77	0.948	0.336	2.046	0.027	0.348	0.786	0.192	3.79	372	0.0604	0.160	-0.543	0.352	2.146	0.936
550T125-30	0.0312	33	0.250	0.85	1.045	0.371	2.047	0.030	0.347	0.897	0.227	4.48	499	0.0810	0.176	-0.542	0.351	2.145	0.936
550T125-33	0.0346	33	0.277	0.94	1.159	0.411	2.047	0.033	0.346	1.029	0.270	5.33	680	0.1104	0.195	-0.541	0.350	2.145	0.936
550T125-43	0.0451	33	0.360	1.23	1.510	0.534	2.047	0.043	0.344	1.429	0.417	8.24	1504	0.2443	0.252	-0.537	0.348	2.144	0.937
550T125-54	0.0566	33	0.452	1.54	1.904	0.668	2.052	0.053	0.342	1.863	0.598	11.82	2740	0.4828	0.315	-0.532	0.345	2.147	0.939
550T125-54	0.0566	50	0.452	1.54	1.904	0.668	2.052	0.053	0.342	1.813	0.535	16.03	2980	0.4828	0.315	-0.532	0.345	2.147	0.939
550T125-68	0.0713	33	0.569	1.94	2.413	0.839	2.059	0.066	0.340	2.413	0.808	15.97	4348	0.9647	0.397	-0.526	0.341	2.152	0.940
550T125-68	0.0713	50	0.569	1.94	2.413	0.839	2.059	0.066	0.340	2.382	0.770	23.06	5352	0.9647	0.397	-0.526	0.341	2.152	0.940
550T125-97	0.1017	33	0.811	2.76	3.484	1.190	2.072	0.090	0.334	3.485	1.190	26.88	6730	2.7973	0.564	-0.514	0.333	2.161	0.943
550T125-97	0.1017	50	0.811	2.76	3.484	1.190	2.072	0.090	0.334	3.485	1.190	39.31	10197	2.7973	0.564	-0.514	0.333	2.161	0.943
550T150-27	0.0283	33	0.241	0.82	1.059	0.376	2.099	0.046	0.436	0.893	0.208	4.10	372	0.0642	0.263	-0.716	0.456	2.260	0.900
550T150-30	0.0312	33	0.265	0.90	1.168	0.414	2.099	0.050	0.435	0.995	0.252	4.97	499	0.0860	0.289	-0.715	0.455	2.259	0.900
550T150-33	0.0346	33	0.294	1.00	1.295	0.459	2.099	0.055	0.434	1.115	0.310	6.13	680	0.1173	0.320	-0.714	0.455	2.259	0.900
550T150-43	0.0451	33	0.383	1.30	1.688	0.596	2.100	0.072	0.432	1.517	0.469	9.26	1504	0.2596	0.414	-0.709	0.452	2.258	0.901
550T150-54	0.0566	33	0.480	1.63	2.129	0.747	2.105	0.089	0.430	2.007	0.629	12.43	2740	0.5130	0.519	-0.704	0.449	2.261	0.903
550T150-54	0.0566	50	0.480	1.63	2.129	0.747	2.105	0.089	0.430	1.930	0.595	17.83	2980	0.5130	0.519	-0.704	0.449	2.261	0.903
550T150-68	0.0713	33	0.605	2.06	2.700	0.939	2.113	0.111	0.427	2.663	0.852	16.83	4348	1.0251	0.655	-0.698	0.445	2.266	0.905
550T150-68	0.0713	50	0.605	2.06	2.700	0.939	2.113	0.111	0.427	2.572	0.805	24.12	5352	1.0251	0.655	-0.698	0.445	2.266	0.905
550T150-97	0.1017	33	0.862	2.93	3.905	1.334	2.128	0.153	0.421	3.906	1.334	28.14	6730	2.9726	0.937	-0.684	0.436	2.275	0.909
550T150-97	0.1017	50	0.862	2.93	3.905	1.334	2.128	0.153	0.421	3.906	1.282	38.37	10197	2.9726	0.937	-0.684	0.436	2.275	0.909
550T200-33	0.0346	33	0.329	1.12	1.567	0.555	2.184	0.123	0.613	1.246	0.307	6.07	680	0.1311	0.694	-1.088	0.674	2.516	0.813
550T200-43	0.0451	33	0.428	1.46	2.044	0.722	2.185	0.160	0.611	1.691	0.496	9.80	1504	0.2902	0.900	-1.083	0.671	2.514	0.814
550T200-54	0.0566	33	0.537	1.83	2.579	0.905	2.191	0.199	0.609	2.256	0.670	13.23	2740	0.5734	1.133	-1.077	0.668	2.517	0.817
550T200-54	0.0566	50	0.537	1.83	2.579	0.905	2.191	0.199	0.609	2.155	0.631	18.88	2980	0.5734	1.133	-1.077	0.668	2.517	0.817
550T200-68	0.0713	33	0.676	2.30	3.275	1.139	2.201	0.248	0.606	3.031	0.916	18.09	4348	1.1459	1.434	-1.070	0.663	2.521	0.820
550T200-68	0.0713	50	0.676	2.30	3.275	1.139	2.201	0.248	0.606	2.898	0.859	25.72	5352	1.1459	1.434	-1.070	0.663	2.521	0.820
550T200-97	0.1017	33	0.964	3.28	4.747	1.621	2.219	0.347	0.600	4.742	1.487	29.39	6730	3.3232	2.067	-1.055	0.653	2.529	0.826
550T200-97	0.1017	50	0.964	3.28	4.747	1.621	2.219	0.347	0.600	4.574	1.395	41.76	10197	3.3232	2.067	-1.055	0.653	2.529	0.826
600T125-271	0.0283	33	0.241	0.82	1.169	0.381	2.204	0.028	0.340	0.958	0.211	3.48	341	0.0642	0.196	-0.519	0.339	2.290	0.949
600T125-30	0.0312	33	0.265	0.90	1.288	0.420	2.204	0.031	0.340	1.095	0.249	4.92	456	0.0860	0.215	-0.518	0.338	2.290	0.949
600T125-33	0.0346	33	0.294	1.00	1.429	0.465	2.205	0.034	0.339	1.258	0.297	5.87	622	0.1173	0.238	-0.516	0.337	2.289	0.949
600T125-43	0.0451	33	0.383	1.30	1.862	0.604	2.205	0.044	0.337	1.769	0.462	9.12	1377	0.2596	0.307	-0.513	0.335	2.289	0.950
600T125-54	0.0566	33	0.480	1.63	2.345	0.757	2.209	0.054	0.335	2.301	0.666	13.17	2728	0.5130	0.384	-0.508	0.332	2.292	0.951
600T125-54	0.0566	50	0.480	1.63	2.345	0.757	2.209	0.054	0.335	2.242	0.593	17.76	2728	0.5130	0.384	-0.508	0.332	2.292	0.951
600T125-68	0.0713	33	0.605	2.06	2.970	0.951	2.216	0.067	0.332	2.970	0.917	18.12	4348	1.0251	0.483	-0.503	0.329	2.296	0.952
600T125-68	0.0713	50	0.605	2.06	2.970	0.951	2.216	0.067	0.332	2.936	0.860	25.74	5352	1.0251	0.483	-0.503	0.329	2.296	0.952
600T125-97	0.1017	33	0.862	2.93	4.282	1.348	2.229	0.092	0.327	4.282	1.348	30.44	7359	2.9726	0.685	-0.491	0.321	2.305	0.955
600T125-97	0.1017	50	0.862	2.93	4.282	1.348	2.229	0.092	0.327	4.282	1.348	44.43	10888	2.9726	0.685	-0.491	0.321	2.305	0.955
600T150-27[1]	0.0283	33	0.255	0.87	1.301	0.424	2.260	0.047	0.427	1.012	0.214	3.53	341	0.0680	0.320	-0.686	0.441	2.400	0.918
600T150-30	0.0312	33	0.281	0.96	1.434	0.467	2.260	0.051	0.427	1.159	0.254	5.01	456	0.0911	0.352	-0.685	0.440	2.400	0.918
600T150-33	0.0346	33	0.311	1.06	1.590	0.517	2.260	0.057	0.426	1.335	0.303	5.99	622	0.1242	0.390	-0.684	0.439	2.400	0.919
600T150-43	0.0451	33	0.405	1.38	2.073	0.673	2.261	0.073	0.424	1.891	0.474	9.37	1377	0.2749	0.504	-0.680	0.437	2.399	0.920
600T150-54	0.0566	33	0.509	1.73	2.612	0.843	2.266	0.091	0.422	2.475	0.690	13.64	2728	0.5432	0.632	-0.675	0.434	2.402	0.921
600T150-54	0.0566	50	0.509	1.73	2.612	0.843	2.266	0.091	0.422	2.402	0.610	18.27	2728	0.5432	0.632	-0.675	0.434	2.402	0.921
600T150-68	0.0713	33	0.641	2.18	3.310	1.059	2.273	0.113	0.419	3.265	0.965	19.06	4348	1.0855	0.797	-0.669	0.430	2.406	0.923
600T150-68	0.0713	50	0.641	2.18	3.310	1.059	2.273	0.113	0.419	3.165	0.893	26.72	5352	1.0855	0.797	-0.669	0.430	2.406	0.923
600T150-97	0.1017	33	0.913	3.11	4.780	1.504	2.288	0.156	0.414	4.780	1.504	31.69	7359	3.1479	1.138	-0.656	0.421	2.416	0.926
600T150-97	0.1017	50	0.913	3.11	4.780	1.504	2.288	0.156	0.414	4.780	1.447	43.33	10888	3.1479	1.138	-0.656	0.421	2.416	0.926

1 Web-height to thickness ratio exceeds 200. Web Stiffeners are required at all support points and concentrated loads.

2 When web height-to thickness ratio exceeds 260, or flange width-to-thickness rato exceeds 60, effective properties are not calculated (limitations in AISI Section B4.1).

See Section Properties Table Notes

(T) Track Section Properties

Member	Design Thickness (in)	Fy (ksi)	Gross Properties							Effective Properties				Torsional Properties					
			Area (in^2)	Weight (lb/ft)	I_x (in^4)	S_x (in^3)	R_x (in)	I_y (in^4)	R_y (in)	I_x (in^4)	S_x (in^3)	M_a (in-k)	Va_g (lb)	Jx1000 (in4)	C_w (in^6)	X_o (in)	m (in)	R_o (in)	β
600T200-33	0.0346	33	0.346	1.18	1.913	0.623	2.352	0.126	0.604	1.542	0.334	6.59	622	0.1380	0.847	-1.048	0.655	2.645	0.843
600T200-43	0.0451	33	0.451	1.53	2.494	0.810	2.353	0.163	0.602	2.077	0.565	11.17	1377	0.3055	1.098	-1.044	0.652	2.644	0.844
600T200-54	0.0566	33	0.565	1.92	3.146	1.015	2.359	0.203	0.600	2.762	0.760	15.02	2728	0.6037	1.381	-1.038	0.649	2.646	0.846
600T200-54	0.0566	50	0.565	1.92	3.146	1.015	2.359	0.203	0.600	2.643	0.718	21.51	2728	0.6037	1.381	-1.038	0.649	2.646	0.846
600T200-68	0.0713	33	0.712	2.42	3.991	1.277	2.368	0.254	0.597	3.700	1.035	20.46	4348	1.2064	1.746	-1.031	0.644	2.651	0.849
600T200-68	0.0713	50	0.712	2.42	3.991	1.277	2.368	0.254	0.597	3.544	0.974	29.17	5352	1.2064	1.746	-1.031	0.644	2.651	0.849
600T200-97	0.1017	33	1.015	3.45	5.774	1.817	2.385	0.355	0.591	5.766	1.672	33.03	7359	3.4985	2.510	-1.016	0.635	2.659	0.854
600T200-97	0.1017	50	1.015	3.45	5.774	1.817	2.385	0.355	0.591	5.567	1.572	47.07	10888	3.4985	2.510	-1.016	0.635	2.659	0.854
800T125-33[1]	0.0346	33	0.363	1.24	2.897	0.711	2.824	0.036	0.313	2.441	0.407	6.71	465	0.1449	0.456	-0.439	0.294	2.875	0.977
800T125-43	0.0451	33	0.473	1.61	3.774	0.925	2.824	0.046	0.311	3.484	0.641	12.66	1030	0.3208	0.589	-0.436	0.292	2.875	0.977
800T125-54	0.0566	33	0.594	2.02	4.747	1.158	2.828	0.057	0.309	4.669	0.941	18.60	2039	0.6339	0.735	-0.432	0.289	2.877	0.977
800T125-54	0.0566	50	0.594	2.02	4.747	1.158	2.828	0.057	0.309	4.427	0.825	24.69	2039	0.6339	0.735	-0.432	0.289	2.877	0.977
800T125-68	0.0713	33	0.748	2.54	6.000	1.455	2.833	0.070	0.307	5.999	1.358	26.84	4086	1.2668	0.920	-0.427	0.286	2.881	0.978
800T125-68	0.0713	50	0.748	2.54	6.000	1.455	2.833	0.070	0.307	5.958	1.217	36.44	4086	1.2668	0.920	-0.427	0.286	2.881	0.978
800T125-97	0.1017	33	1.066	3.63	8.617	2.062	2.844	0.097	0.301	8.615	2.062	46.58	8846	3.6738	1.296	-0.417	0.279	2.890	0.979
800T125-97	0.1017	50	1.066	3.63	8.617	2.062	2.844	0.097	0.301	8.615	2.062	64.03	10888	3.6738	1.296	-0.417	0.279	2.890	0.979
800T150-33[1]	0.0346	33	0.380	1.29	3.181	0.781	2.892	0.060	0.397	2.569	0.414	6.83	465	0.1518	0.751	-0.588	0.388	2.977	0.961
800T150-43	0.0451	33	0.496	1.69	4.145	1.016	2.892	0.077	0.395	3.690	0.656	12.96	1030	0.3361	0.972	-0.584	0.386	2.977	0.961
800T150-54	0.0566	33	0.622	2.12	5.216	1.272	2.896	0.096	0.393	4.978	0.970	19.17	2039	0.6641	1.215	-0.580	0.383	2.980	0.962
800T150-54	0.0566	50	0.622	2.12	5.216	1.272	2.896	0.096	0.393	4.694	0.845	25.29	2039	0.6641	1.215	-0.580	0.383	2.980	0.962
800T150-68	0.0713	33	0.783	2.66	6.596	1.599	2.902	0.119	0.390	6.531	1.414	27.94	4086	1.3272	1.526	-0.575	0.379	2.984	0.963
800T150-68	0.0713	50	0.783	2.66	6.596	1.599	2.902	0.119	0.390	6.364	1.257	37.63	4086	1.3272	1.526	-0.575	0.379	2.984	0.963
800T150-97	0.1017	33	1.116	3.80	9.483	2.270	2.914	0.165	0.385	9.481	2.269	47.62	8846	3.8491	2.162	-0.564	0.372	2.993	0.965
800T150-97	0.1017	50	1.116	3.80	9.483	2.270	2.914	0.165	0.385	9.481	2.195	65.71	10888	3.8491	2.162	-0.564	0.372	2.993	0.965
800T200-33[1]	0.0346	33	0.415	1.41	3.750	0.921	3.006	0.135	0.571	2.788	0.424	6.99	465	0.1656	1.638	-0.917	0.589	3.194	0.918
800T200-43	0.0451	33	0.541	1.84	4.888	1.198	3.006	0.175	0.569	4.044	0.676	13.37	1030	0.3667	2.124	-0.913	0.587	3.193	0.918
800T200-54	0.0566	33	0.679	2.31	6.154	1.501	3.012	0.218	0.567	5.508	1.010	19.96	2039	0.7245	2.664	-0.908	0.584	3.196	0.919
800T200-54	0.0566	50	0.679	2.31	6.154	1.501	3.012	0.218	0.567	5.152	0.873	26.12	2039	0.7245	2.664	-0.908	0.584	3.196	0.919
800T200-68	0.0713	33	0.854	2.91	7.789	1.888	3.019	0.272	0.564	7.311	1.492	29.49	4086	1.4480	3.357	-0.902	0.580	3.201	0.921
800T200-68	0.0713	50	0.854	2.91	7.789	1.888	3.019	0.272	0.564	7.056	1.312	39.28	4086	1.4480	3.357	-0.902	0.580	3.201	0.921
800T200-97	0.1017	33	1.218	4.14	11.215	2.684	3.034	0.379	0.558	11.187	2.495	49.30	8846	4.1998	4.792	-0.889	0.571	3.211	0.923
800T200-97	0.1017	50	1.218	4.14	11.215	2.684	3.034	0.379	0.558	10.844	2.352	70.41	10888	4.1998	4.792	-0.889	0.571	3.211	0.923
1000T125-43[1]	0.0451	33	0.563	1.92	6.633	1.306	3.431	0.047	0.290	5.886	0.820	13.53	822	0.3819	0.973	-0.379	0.259	3.465	0.988
1000T125-54	0.0566	33	0.707	2.40	8.337	1.635	3.434	0.059	0.288	7.961	1.217	24.05	1627	0.7548	1.212	-0.376	0.256	3.467	0.988
1000T125-54	0.0566	50	0.707	2.40	8.337	1.635	3.434	0.059	0.288	7.480	1.056	31.62	1627	0.7548	1.212	-0.376	0.256	3.467	0.988
1000T125-68	0.0713	33	0.890	3.03	10.526	2.054	3.439	0.073	0.286	10.451	1.782	35.22	3260	1.5084	1.515	-0.372	0.253	3.471	0.989
1000T125-68	0.0713	50	0.890	3.03	10.526	2.054	3.439	0.073	0.286	10.157	1.576	47.19	3260	1.5084	1.515	-0.372	0.253	3.471	0.989
1000T125-97	0.1017	33	1.269	4.32	15.083	2.913	3.448	0.100	0.281	15.079	2.907	57.45	8846	4.3751	2.123	-0.363	0.247	3.478	0.989
1000T125-97	0.1017	50	1.269	4.32	15.083	2.913	3.448	0.100	0.281	15.079	2.754	82.45	9505	4.3751	2.123	-0.363	0.247	3.478	0.989
1000T150-43[1]	0.0451	33	0.586	1.99	7.210	1.419	3.508	0.080	0.370	6.196	0.837	13.82	822	0.3972	1.612	-0.513	0.345	3.565	0.979
1000T150-54	0.0566	33	0.735	2.50	9.065	1.778	3.512	0.100	0.368	8.433	1.250	24.71	1627	0.7850	2.013	-0.509	0.342	3.567	0.980
1000T150-54	0.0566	50	0.735	2.50	9.065	1.778	3.512	0.100	0.368	7.881	1.080	32.32	1627	0.7850	2.013	-0.509	0.342	3.567	0.980
1000T150-68	0.0713	33	0.926	3.15	11.450	2.234	3.517	0.124	0.366	11.345	1.848	36.52	3260	1.5688	2.522	-0.505	0.339	3.572	0.980
1000T150-68	0.0713	50	0.926	3.15	11.450	2.234	3.517	0.124	0.366	10.778	1.623	48.58	3260	1.5688	2.522	-0.505	0.339	3.572	0.980
1000T150-97	0.1017	33	1.320	4.49	16.420	3.171	3.527	0.172	0.361	16.416	3.166	62.55	8846	4.5504	3.557	-0.495	0.332	3.580	0.981
1000T150-97	0.1017	50	1.320	4.49	16.420	3.171	3.527	0.172	0.361	16.416	2.906	87.00	9505	4.5504	3.557	-0.495	0.332	3.580	0.981
1000T200-43[1]	0.0451	33	0.631	2.15	8.364	1.646	3.641	0.183	0.539	6.723	0.861	14.21	822	0.4278	3.540	-0.813	0.534	3.769	0.953
1000T200-54	0.0566	33	0.792	2.69	10.520	2.063	3.645	0.228	0.537	9.233	1.297	25.62	1627	0.8454	4.434	-0.809	0.531	3.772	0.954
1000T200-54	0.0566	50	0.792	2.69	10.520	2.063	3.645	0.228	0.537	8.563	1.112	33.29	1627	0.8454	4.434	-0.809	0.531	3.772	0.954
1000T200-68	0.0713	33	0.997	3.39	13.296	2.595	3.652	0.284	0.534	12.556	1.939	38.31	3260	1.6896	5.576	-0.803	0.527	3.777	0.955
1000T200-68	0.0713	50	0.997	3.39	13.296	2.595	3.652	0.284	0.534	11.824	1.686	50.48	3260	1.6896	5.576	-0.803	0.527	3.777	0.955
1000T200-97	0.1017	33	1.422	4.84	19.093	3.687	3.665	0.397	0.528	19.043	3.432	67.81	8846	4.9010	7.924	-0.791	0.519	3.786	0.956
1000T200-97	0.1017	50	1.422	4.84	19.093	3.687	3.665	0.397	0.528	18.595	3.086	92.39	9505	4.9010	7.924	-0.791	0.519	3.786	0.956

1 Web-height to thickness ratio exceeds 200. Web Stiffeners are required at all support points and concentrated loads.

2 When web height-to thickness ratio exceeds 260, or flange width-to-thickness rato exceeds 60, effective properties are not calculated (limitations in AISI Section B4.1).

See Section Properties Table Notes

(T) Track Section Properties

Member	Design Thickness (in)	Fy (ksi)	Gross Properties							Effective Properties				Torsional Properties					
			Area (in^2)	Weight (lb/ft)	I_x (in^4)	S_x (in^3)	R_x (in)	I_y (in^4)	R_y (in)	I_x (in^4)	S_x (in^3)	M_a (in-k)	Va_a (lb)	Jx1000 (in4)	C_w (in^6)	X_o (in)	m (in)	R_o (in)	β
1200T125-54[1]	0.0566	33	0.820	2.79	13.341	2.187	4.034	0.060	0.271	12.295	1.493	24.63	1354	0.8756	1.820	-0.333	0.230	4.056	0.993
1200T125-54[1]	0.0566	50	0.820	2.79	13.341	2.187	4.034	0.060	0.271	11.460	1.287	32.18	1354	0.8756	1.820	-0.333	0.230	4.056	0.993
1200T125-68	0.0713	33	1.033	3.51	16.834	2.749	4.037	0.074	0.268	16.243	2.208	43.64	2712	1.7501	2.270	-0.329	0.227	4.060	0.993
1200T125-68	0.0713	50	1.033	3.51	16.834	2.749	4.037	0.074	0.268	15.688	1.935	57.95	2712	1.7501	2.270	-0.329	0.227	4.060	0.993
1200T125-97	0.1017	33	1.472	5.01	24.090	3.899	4.045	0.102	0.264	24.081	3.691	72.93	7901	5.0763	3.171	-0.322	0.222	4.066	0.994
1200T125-97	0.1017	50	1.472	5.01	24.090	3.899	4.045	0.102	0.264	23.751	3.443	103.09	7901	5.0763	3.171	-0.322	0.222	4.066	0.994
1200T150-541	0.0566	33	0.848	2.89	14.384	2.358	4.118	0.103	0.348	12.962	1.531	25.26	1354	0.9059	3.033	-0.454	0.310	4.157	0.988
1200T150-541	0.0566	50	0.848	2.89	14.384	2.358	4.118	0.103	0.348	12.021	1.314	32.85	1354	0.9059	3.033	-0.454	0.310	4.157	0.988
1200T150-68	0.0713	33	1.068	3.63	18.156	2.964	4.122	0.127	0.345	17.571	2.283	45.12	2712	1.8105	3.795	-0.450	0.307	4.161	0.988
1200T150-68	0.0713	50	1.068	3.63	18.156	2.964	4.122	0.127	0.345	16.568	1.988	59.53	2712	1.8105	3.795	-0.450	0.307	4.161	0.988
1200T150-97	0.1017	33	1.523	5.18	25.999	4.208	4.131	0.176	0.340	25.990	3.997	78.99	7901	5.2516	5.335	-0.441	0.301	4.169	0.989
1200T150-97	0.1017	50	1.523	5.18	25.999	4.208	4.131	0.176	0.340	25.717	3.620	108.38	7901	5.2516	5.335	-0.441	0.301	4.169	0.989
1200T200-54[1]	0.0566	33	0.905	3.08	16.470	2.700	4.266	0.236	0.510	14.079	1.583	26.12	1354	0.9663	6.714	-0.730	0.487	4.358	0.972
1200T200-54[1]	0.0566	50	0.905	3.08	16.470	2.700	4.266	0.236	0.510	12.961	1.351	33.77	1354	0.9663	6.714	-0.730	0.487	4.358	0.972
1200T200-68	0.0713	33	1.140	3.88	20.799	3.396	4.272	0.294	0.508	19.283	2.386	47.14	2712	1.9313	8.431	-0.725	0.483	4.363	0.972
1200T200-68	0.0713	50	1.140	3.88	20.799	3.396	4.272	0.294	0.508	18.029	2.060	61.68	2712	1.9313	8.431	-0.725	0.483	4.363	0.972
1200T200-97	0.1017	33	1.625	5.53	29.816	4.826	4.284	0.410	0.502	29.808	4.303	85.02	7901	5.6022	11.945	-0.714	0.476	4.372	0.973
1200T200-97	0.1017	50	1.625	5.53	29.816	4.826	4.284	0.410	0.502	28.971	3.824	114.50	7901	5.6022	11.945	-0.714	0.476	4.372	0.973
1200T200-118	0.1242	33	1.984	6.75	36.544	5.878	4.292	0.492	0.498	36.535	5.800	114.62	13193	10.2007	14.513	-0.706	0.471	4.378	0.974
1200T200-118	0.1242	50	1.984	6.75	36.544	5.878	4.292	0.492	0.498	36.535	5.285	158.23	14431	10.2007	14.513	-0.706	0.471	4.378	0.974
1400T125-54[1]	0.0566	33	0.933	3.17	19.987	2.815	4.628	0.061	0.256	17.722	1.768	29.17	1160	0.9965	2.559	-0.299	0.209	4.645	0.996
1400T125-54[1]	0.0566	50	0.933	3.17	19.987	2.815	4.628	0.061	0.256	16.406	1.518	37.95	1160	0.9965	2.559	-0.299	0.209	4.645	0.996
1400T125-68	0.0713	33	1.175	4.00	25.208	3.538	4.631	0.076	0.254	23.549	2.634	52.04	2322	1.9917	3.189	-0.296	0.206	4.648	0.996
1400T125-68	0.0713	50	1.175	4.00	25.208	3.538	4.631	0.076	0.254	22.618	2.294	68.69	2322	1.9917	3.189	-0.296	0.206	4.648	0.996
1400T125-97	0.1017	33	1.676	5.70	36.043	5.021	4.638	0.104	0.249	35.773	4.481	88.55	6759	5.7776	4.444	-0.289	0.201	4.653	0.996
1400T125-97	0.1017	50	1.676	5.70	36.043	5.021	4.638	0.104	0.249	34.586	4.135	123.81	6759	5.7776	4.444	-0.289	0.201	4.653	0.996
1400T125-118	0.1242	33	2.046	6.96	44.090	6.109	4.642	0.124	0.246	44.073	5.855	115.70	12342	10.5201	5.334	-0.284	0.197	4.657	0.996
1400T125-118	0.1242	50	2.046	6.96	44.090	6.109	4.642	0.124	0.246	43.751	5.455	163.32	12342	10.5201	5.334	-0.284	0.197	4.657	0.996
1400T150-54[1]	0.0566	33	0.962	3.27	21.402	3.015	4.718	0.105	0.330	18.619	1.811	29.88	1160	1.0267	4.280	-0.410	0.283	4.747	0.993
1400T150-54[1]	0.0566	50	0.962	3.27	21.402	3.015	4.718	0.105	0.330	17.150	1.548	38.71	1160	1.0267	4.280	-0.410	0.283	4.747	0.993
1400T150-68	0.0713	33	1.211	4.12	27.000	3.790	4.722	0.130	0.328	25.412	2.719	53.72	2322	2.0521	5.349	-0.407	0.280	4.751	0.993
1400T150-68	0.0713	50	1.211	4.12	27.000	3.790	4.722	0.130	0.328	23.803	2.354	70.47	2322	2.0521	5.349	-0.407	0.280	4.751	0.993
1400T150-97	0.1017	33	1.727	5.87	38.626	5.381	4.730	0.180	0.323	38.338	4.835	95.54	6759	5.9529	7.503	-0.399	0.275	4.757	0.993
1400T150-97	0.1017	50	1.727	5.87	38.626	5.381	4.730	0.180	0.323	37.280	4.336	129.82	6759	5.9529	7.503	-0.399	0.275	4.757	0.993
1400T150-118	0.1242	33	2.108	7.17	47.269	6.549	4.735	0.215	0.319	47.252	6.292	124.34	12342	10.8394	9.048	-0.393	0.270	4.762	0.993
1400T150-118	0.1242	50	2.108	7.17	47.269	6.549	4.735	0.215	0.319	46.910	5.888	176.28	12342	10.8394	9.048	-0.393	0.270	4.762	0.993
1400T200-54[1]	0.0566	33	1.018	3.46	24.232	3.413	4.879	0.242	0.487	20.099	1.870	30.85	1160	1.0872	9.520	-0.665	0.449	4.948	0.982
1400T200-54[1]	0.0566	50	1.018	3.46	24.232	3.413	4.879	0.242	0.487	18.385	1.590	39.75	1160	1.0872	9.520	-0.665	0.449	4.948	0.982
1400T200-68	0.0713	33	1.282	4.36	30.583	4.293	4.884	0.301	0.485	27.708	2.833	55.97	2322	2.1729	11.942	-0.661	0.446	4.952	0.982
1400T200-68	0.0713	50	1.282	4.36	30.583	4.293	4.884	0.301	0.485	25.741	2.434	72.87	2322	2.1729	11.942	-0.661	0.446	4.952	0.982
1400T200-97	0.1017	33	1.828	6.22	43.791	6.101	4.894	0.420	0.479	43.676	5.179	102.34	6759	6.3035	16.883	-0.651	0.439	4.960	0.983
1400T200-97	0.1017	50	1.828	6.22	43.791	6.101	4.894	0.420	0.479	41.762	4.563	136.62	6759	6.3035	16.883	-0.651	0.439	4.960	0.983
1400T200-118	0.1242	33	2.232	7.59	53.628	7.430	4.901	0.505	0.476	53.611	7.069	139.69	12342	11.4780	20.479	-0.644	0.434	4.966	0.983
1400T200-118	0.1242	50	2.232	7.59	53.628	7.430	4.901	0.505	0.476	53.450	6.361	190.46	12342	11.4780	20.479	-0.644	0.434	4.966	0.983
1600T125-54[1]	0.0566	33	1.046	3.56	28.500	3.519	5.219	0.062	0.243	24.283	2.043	33.71	1014	1.1174	3.432	-0.272	0.191	5.232	0.997
1600T125-54[1]	0.0566	50	1.046	3.56	28.500	3.519	5.219	0.062	0.243	22.345	1.749	43.72	1014	1.1174	3.432	-0.272	0.191	5.232	0.997
1600T125-68[1]	0.0713	33	1.318	4.48	35.935	4.423	5.222	0.077	0.241	32.434	3.059	50.48	2029	2.2333	4.273	-0.268	0.189	5.234	0.997
1600T125-68[1]	0.0713	50	1.318	4.48	35.935	4.423	5.222	0.077	0.241	31.000	2.653	66.32	2029	2.2333	4.273	-0.268	0.189	5.234	0.997
1600T125-97	0.1017	33	1.879	6.39	51.349	6.279	5.227	0.105	0.237	49.840	5.274	104.22	5906	6.4788	5.945	-0.262	0.184	5.239	0.997
1600T125-97	0.1017	50	1.879	6.39	51.349	6.279	5.227	0.105	0.237	47.826	4.826	144.50	5906	6.4788	5.945	-0.262	0.184	5.239	0.997
1600T125-118	0.1242	33	2.294	7.81	62.789	7.641	5.231	0.125	0.234	62.761	6.966	137.65	10781	11.7973	7.126	-0.257	0.181	5.243	0.998
1600T125-118	0.1242	50	2.294	7.81	62.789	7.641	5.231	0.125	0.234	60.926	6.422	192.27	10781	11.7973	7.126	-0.257	0.181	5.243	0.998

1 Web-height to thickness ratio exceeds 200. Web Stiffeners are required at all support points and concentrated loads.

2 When web height-to thickness ratio exceeds 260, or flange width-to-thickness rato exceeds 60, effective properties are not calculated (limitations in AISI Section B4.1).

See Section Properties Table Notes

(T) Track Section Properties

Member	Design Thickness (in)	Fy (ksi)	Gross Properties							Effective Properties				Torsional Properties					
			Area (in^2)	Weight (lb/ft)	I_x (in^4)	S_x (in^3)	R_x (in)	I_y (in^4)	R_y (in)	I_x (in^4)	S_x (in^3)	M_a (in-k)	Va_g (lb)	Jx1000 (in4)	C_w (in^6)	X_o (in)	m (in)	R_o (in)	β
1600T150-54[1]	0.0566	33	1.075	3.66	30.343	3.747	5.314	0.106	0.314	25.443	2.091	34.50	1014	1.1476	5.757	-0.374	0.260	5.336	0.995
1600T150-54[1]	0.0566	50	1.075	3.66	30.343	3.747	5.314	0.106	0.314	23.298	1.783	44.56	1014	1.1476	5.757	-0.374	0.260	5.336	0.995
1600T150-68[1]	0.0713	33	1.354	4.60	38.268	4.710	5.317	0.132	0.312	34.941	3.154	52.03	2029	2.2938	7.188	-0.371	0.258	5.339	0.995
1600T150-68[1]	0.0713	50	1.354	4.60	38.268	4.710	5.317	0.132	0.312	32.535	2.719	67.97	2029	2.2938	7.188	-0.371	0.258	5.339	0.995
1600T150-97	0.1017	33	1.930	6.57	54.708	6.690	5.324	0.183	0.308	53.168	5.676	112.15	5906	6.6541	10.066	-0.363	0.253	5.345	0.995
1600T150-97	0.1017	50	1.930	6.57	54.708	6.690	5.324	0.183	0.308	51.376	5.051	151.22	5906	6.6541	10.066	-0.363	0.253	5.345	0.995
1600T150-118	0.1242	33	2.356	8.02	66.919	8.144	5.329	0.218	0.304	66.892	7.461	147.44	10781	12.1166	12.124	-0.358	0.249	5.350	0.996
1600T150-118	0.1242	50	2.356	8.02	66.919	8.144	5.329	0.218	0.304	65.020	6.913	206.98	10781	12.1166	12.124	-0.358	0.249	5.350	0.996
1600T200-54[1]	0.0566	33	1.131	3.85	34.030	4.202	5.485	0.246	0.467	27.332	2.156	35.57	1014	1.2081	12.864	-0.612	0.417	5.538	0.988
1600T200-54[1]	0.0566	50	1.131	3.85	34.030	4.202	5.485	0.246	0.467	24.860	1.828	45.71	1014	1.2081	12.864	-0.612	0.417	5.538	0.988
1600T200-68[1]	0.0713	33	1.425	4.85	42.933	5.284	5.489	0.307	0.464	37.905	3.280	54.11	2029	2.4146	16.123	-0.607	0.414	5.542	0.988
1600T200-68[1]	0.0713	50	1.425	4.85	42.933	5.284	5.489	0.307	0.464	35.012	2.808	70.19	2029	2.4146	16.123	-0.607	0.414	5.542	0.988
1600T200-97	0.1017	33	2.032	6.91	61.425	7.511	5.498	0.428	0.459	60.192	6.058	119.71	5906	7.0047	22.755	-0.598	0.408	5.550	0.988
1600T200-97	0.1017	50	2.032	6.91	61.425	7.511	5.498	0.428	0.459	57.306	5.303	158.77	5906	7.0047	22.755	-0.598	0.408	5.550	0.988
1600T200-118	0.1242	33	2.481	8.44	75.179	9.149	5.505	0.515	0.455	75.152	8.338	164.77	10781	12.7552	27.568	-0.592	0.403	5.556	0.989
1600T200-118	0.1242	50	2.481	8.44	75.179	9.149	5.505	0.515	0.455	73.606	7.441	222.78	10781	12.7552	27.568	-0.592	0.403	5.556	0.989

1 Web-height to thickness ratio exceeds 200. Web Stiffeners are required at all support points and concentrated loads.

2 When web height-to thickness ratio exceeds 260, or flange width-to-thickness rato exceeds 60, effective properties are not calculated (limitations in AISI Section B4.1).

See Section Properties Table Notes



Web Depth-to-Thickness Ratios for Stud and Joist Members[2, 3]

Style	Web Depth (in)	18Mil 0.0188	27Mil 0.0283	30Mil 0.0312	33Mil 0.0346	43Mil 0.0451	54Mil 0.0566	68Mil 0.0713	97Mil 0.1017	118Mil 0.1242
162S	1.625	75	50	45	41	31	24	18	11	8
250S	2.500	122	81	73	66	50	39	30	20	15
350S	3.500	175	116	105	95	72	57	44	29	23
362S	3.625	182	120	109	98	75	59	46	31	24
400S	4.000	202 [1]	134	121	109	84	66	51	34	27
550S	5.500	-	187	169	153	117	92	72	49	39
600S	6.000	-	204 [1]	185	167	128	101	79	54	43
800S	8.000	-	-	249 [1]	225 [1]	172	136	107	74	59
1000S	10.000	-	-	-	-	217 [1]	172	135	93	76
1200S	12.000	-	-	-	-	-	207 [1]	163	113	92
1400S	14.000	-	-	-	-	-	242 [1]	191	133	108
1600S	16.000	-	-	-	-	-	-	219 [1]	152	124

1 h/t exceeds 200

2 h value used for h/t calculations is the flat width of the web. For Stud members, this is the out-to-out member size, minus twice the thickness, minus twice the inside bend radius.

3 h/t values exceeding 260 are marked with a dash (-)

Limiting Wall Heights - Composite

Interior Non-Structural Composite Table Notes

1. Allowable composite limiting heights are tested/calculated using ICC-ES AC86.
2. Minimum safety factor for strength = 1.508 for 5 to 10 psf, and 2.327 for 15 psf.
3. The gypsum board must be applied vertically at full height to each stud flange and installed using minimum No. 6 Type S Drywall screws spaced a maximum of 12 in. on-center for studs at 24-in spacing, and 16 in. on-center for studs at 16 and 12 in. spacing.
4. No fasteners are required for attaching the stud to the track.
5. Stud end bearing must be a minimum of 1 inch.
6. Minimum material yield strength equals 33 ksi.
7. 'f' adjacent to the height value indicates that flexural stress controls the allowable wall height.

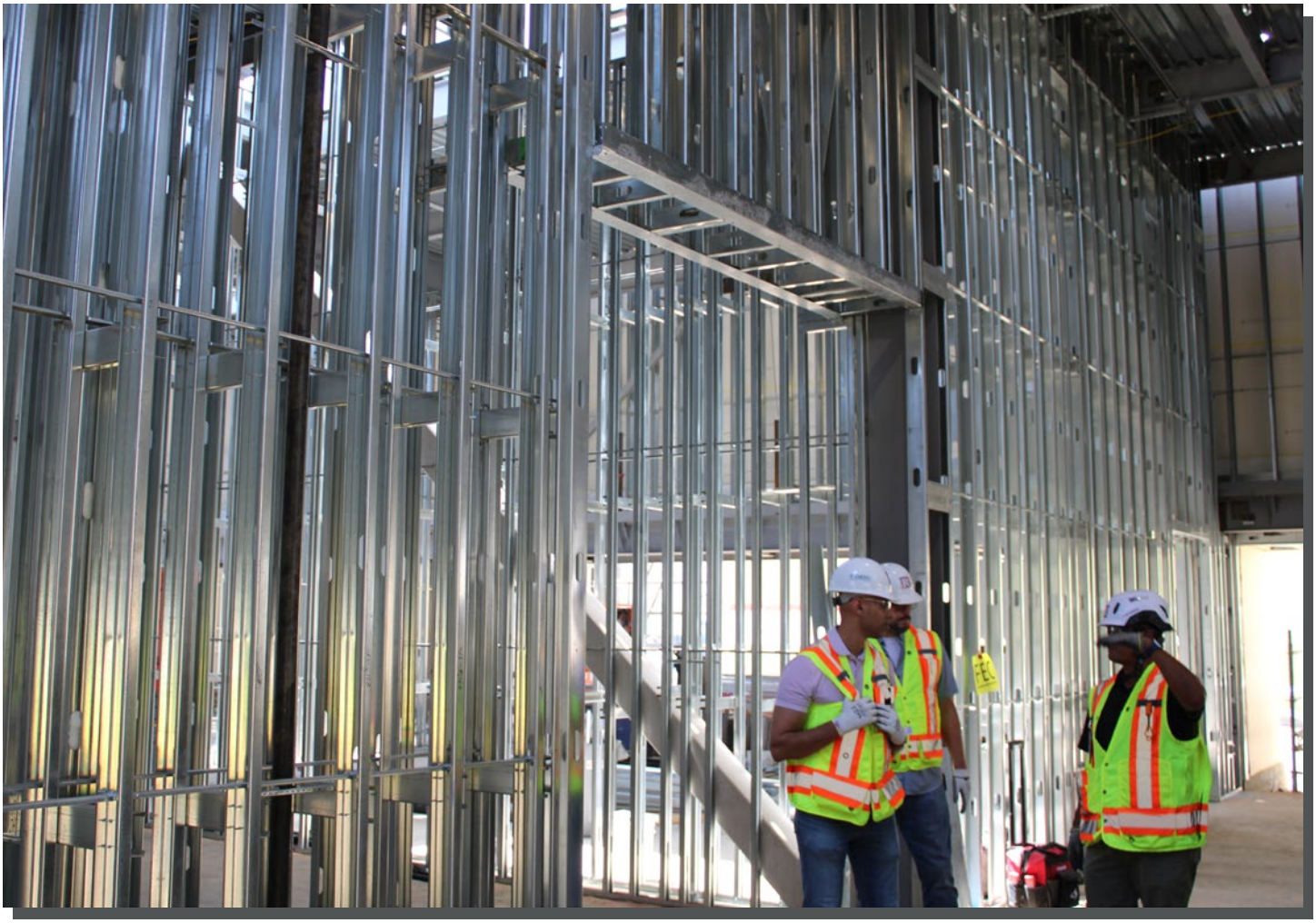

Interior Non-Structural Composite

Stud Member	Spacing, in, oc	Fy, ksi	5 psf			7.5 psf			10 psf			15 pf		
			L/120	L/240	L/360	L/120	L/240	L/360	L/120	L/240	L/360	L/120	L/240	L/360
162S125-18	12	33	13'-0" f	11'-1"	9'-10"	10'-8" f	9'-8"	8'-7"	9'-3" f	8'-9"	7'-9"	---	---	---
	16		11'-3" f	10'-1"	8'-11"	9'-3" f	8'-9"	7'-9"	8'-0" f	7'-11"	---	---	---	---
	24		9'-3" f	8'-9"	7'-9"	---	---	---	---	---	---	---	---	---
162S125-27	12	33	14'-9"	11'-8"	10'-2"	12'-10"	10'-2"	8'-7"	11'-8"	9'-1"	7'-6"	8'-6"	---	---
	16		13'-4"	10'-7"	9'-1"	11'-8"	9'-1"	7'-6"	10'-7"	7'-11"	---	---	---	---
	24		11'-8"	9'-1"	---	10'-2"	---	---	9'-1"	---	---	---	---	---
162S125-30	12	33	14'-11"	11'-10"	10'-4"	13'-1"	10'-4"	8'-11"	11'-10"	9'-4"	7'-11"	9'-10" f	7'-11"	---
	16		13'-7"	10'-9"	9'-4"	11'-10"	9'-4"	7'-11"	10'-9"	8'-3"	---	8'-6"	---	---
	24		11'-10"	9'-4"	7'-11"	10'-4"	7'-11"	---	9'-4"	---	---	---	---	---
250S125-18	12	33	16'-4" f	14'-2"	12'-9"	13'-4" f	12'-4"	11'-2"	11'-7" f	11'-3"	10'-2"	---	---	---
	16		14'-2" f	12'-10"	11'-7"	11'-7" f	11'-3"	10'-2"	10'-0" f	10'-0" f	9'-0"	---	---	---
	24		11'-7" f	11'-3"	10'-2"	9'-5" f	9'-5" f	8'-6"	8'-2" f	8'-2" f	---	---	---	---
250S125-27	12	33	18'-7"	15'-4"	13'-9"	16'-3"	13'-5"	11'-12"	14'-9"	12'-2"	10'-11"	10'-6" f	10'-6" f	9'-4"
	16		16'-10"	13'-11"	12'-5"	14'-9"	12'-2"	10'-11"	13'-5"	11'-1"	9'-11"	9'-1" f	9'-1" f	8'-1"
	24		14'-9"	12'-2"	10'-11"	12'-11"	10'-8"	9'-4"	11'-3" f	9'-8"	8'-1"	---	---	---
250S125-30	12	33	18'-5"	15'-10"	14'-1"	16'-1"	13'-10"	12'-4"	14'-7"	12'-7"	11'-2"	11'-0" f	11'-0" f	9'-9"
	16		16'-9"	14'-5"	12'-10"	14'-7"	12'-7"	11'-2"	13'-3"	11'-5"	10'-2"	9'-6" f	9'-6" f	8'-8"
	24		14'-7"	12'-7"	11'-2"	12'-9"	11'-0"	9'-9"	11'-7"	10'-0"	8'-8"	7'-9" f	7'-9" f	---
250S125-33	12	33	19'-8"	15'-8"	13'-8"	17'-3"	13'-8"	11'-11"	15'-8"	12'-5"	10'-10"	11'-5" f	10'-10"	9'-5"
	16		17'-11"	14'-3"	12'-5"	15'-8"	12'-5"	10'-10"	14'-3"	11'-3"	9'-10"	9'-11" f	9'-10"	8'-4"
	24		15'-8"	12'-5"	10'-10"	13'-8"	10'-10"	9'-5"	12'-4" f	9'-10"	8'-4"	8'-1" f	8'-1" f	---
350S125-18	12	33	18'-3" f	16'-4"	14'-4"	14'-11" f	14'-4"	12'-6"	12'-11" f	12'-11" f	11'-4	8'-5" f	8'-5" f	8'-5" f
	16		15'-10" f	14'-10"	13'-0"	12'-11" f	12'-11" f	11'-4"	11'-2" f	11'-2" f	10'-3"	---	---	---
	24		12'-11" f	12'-11" f	11'-4"	10'-7" f	10'-7" f	9'-11"	9'-2" f	9'-2" f	9'-0"	---	---	---
350S125-27	12	33	22'-6"	17'-11"	15'-7"	19'-8"	15'-7"	13'-8"	17'-11"	14'-2"	12'-4"	12'-0" f	12'-0" f	10'-8"
	16		20'-6"	16'-3"	14'-2"	17'-11"	14'-2"	12'-4"	15'-10" f	12'-11"	11'-2"	10'-5" f	10'-5" f	---
	24		17'-11"	14'-2"	12'-4"	14'-11" f	12'-4"	10'-8"	12'-11" f	11'-2"	---	---	---	---
350S125-30	12	33	22'-6"	17'-11"	15'-8"	19'-8"	15'-8"	13'-8"	17'-11"	14'-2"	12'-4"	12'-10" f	12'-4"	10'-7"
	16		20'-6"	16'-3"	14'-2"	17'-11"	14'-2"	12'-4"	16'-3"	12'-11"	11'-1"	11'-1" f	11'-1" f	---
	24		17'-11"	14'-2"	12'-4"	15'-8"	12'-4"	10'-7"	13'-9" f	11'-1"	---	---	---	---
350S125-33	12	33	23'-0"	18'-3"	15'-11"	20'-1"	15'-11"	13'-11"	18'-3"	14'-6"	12'-8"	13'-3" f	12'-8"	10'-10"
	16		20'-11"	16'-7"	14'-6"	18'-3"	14'-6"	12'-8"	16'-7"	13'-2"	11'-4"	11'-6" f	11'-4"	9'-8"
	24		18'-3"	14'-6"	12'-8"	15'-11"	12'-8"	10'-10"	14'-4" f	11'-4"	9'-8"	---	---	---
362S125-18	12	33	18'-8" f	16'-8"	14'-7"	15'-3" f	14'-7"	12'-9"	13'-2" f	13'-2" f	11'-6"	8'-8" f	8'-8" f	8'-8" f
	16		16'-2" f	15'-2"	13'-3"	13'-2" f	13'-2" f	11'-6"	11'-5" f	11'-5" f	10'-4"	---	---	---
	24		13'-2" f	13'-2" f	11'-6"	10'-9" f	10'-9" f	9'-11"	9'-4" f	9'-4" f	8'-11"	---	---	---
362S125-27	12	33	22'-10"	18'-2"	15'-10"	19'-11"	15'-10"	13'-10"	18'-2"	14'-5"	12'-6"	12'-0" f	12'-0" f	10'-7"
	16		20'-9"	16'-6"	14'-5"	18'-2"	14'-5"	12'-6"	15'-9" f	13'-1"	12'-2"	10'-5" f	10'-5" f	---
	24		18'-2"	14'-5"	12'-6"	14'-11" f	12'-6"	10'-7"	12'-11" f	11'-1"	---	---	---	---
362S125-30	12	33	22'-10"	18'-3"	16'-4"	19'-11"	16'-0"	14'-3"	18'-1"	14'-6"	12'-11"	12'-8" f	12'-8" f	10'-11"
	16		20'-8"	16'-7"	14'-10"	18'-1"	14'-6"	12'-11"	16'-5"	13'-2"	11'-6"	11'-0" f	11'-0" f	---
	24		18'-1"	14'-6"	12'-11"	15'-9" f	12'-8"	10'-11"	13'-8" f	11'-4"	---	---	---	---
362S125-33	12	33	24'-2"	19'-2"	16'-9"	21'-1"	16'-9"	14'-8"	19'-2"	15'-3"	13'-4"	13'-5" f	13'-4"	11'-4"
	16		21'-11"	17'-5"	15'-3"	19'-2"	15'-3"	13'-4"	17'-5"	13'-10"	11'-11"	11'-8" f	11'-8" f	10'-1"
	24		19'-2"	15'-3"	13'-4"	16'-8" f	13'-4"	11'-4"	14'-5" f	11'-11"	10'-1"	---	---	---
400S125-18	12	33	19'-3" f	17'-6"	15'-4"	15'-9" f	15'-4"	13'-4"	13'-8" f	13'-8" f	12'-2"	8'-11" f	8'-11" f	8'-11" f
	16		16'-8" f	15'-11"	13'-11"	13'-8" f	13'-8" f	12'-2"	11'-10" f	11'-10" f	11'-0"	7'-9" f	7'-9" f	7'-9" f
	24		13'-8" f	13'-8" f	12'-2"	11'-2" f	11'-2" f	10'-7"	9'-8" f	9'-8" f	9'-7"	---	---	---
400S125-27	12	33	24'-6"	19'-5"	17'-0"	21'-5"	17'-0"	14'-10"	18'-8" f	15'-5"	13'-6"	12'-3" f	12'-3" f	11'-8"
	16		22'-3"	17'-8"	15'-5"	18'-8" f	15'-5"	13'-6"	16'-2" f	14'-0"	12'-2"	10'-8" f	10'-8" f	10'-6"
	24		18'-8" f	15'-5"	13'-6"	15'-3" f	13'-6"	11'-8"	13'-3" f	12'-2"	10'-6"	---	---	---
400S125-30	12	33	24'-6"	19'-5"	17'-0"	21'-5"	17'-0"	14'-10"	19'-5"	15'-5"	13'-6"	13'-2" f	13'-2" f	11'-7"
	16		22'-3"	17'-8"	15'-5"	19'-5"	15'-5"	13'-6"	17'-5" f	14'-0"	12'-2"	11'-5" f	11'-5" f	10'-4"
	24		19'-5"	15'-5"	13'-6"	16'-5" f	13'-6"	11'-7"	14'-2" f	12'-2"	10'-4"	---	---	---

See Interior Non-Structural Composite Table Notes

Interior Non-Structural Composite

Stud Member	Spacing, in, oc	Fy, ksi	5 psf			7.5 psf			10 psf			15 pf		
			L/120	L/240	L/360	L/120	L/240	L/360	L/120	L/240	L/360	L/120	L/240	L/360
400S125-33	12	33	25'-3"	20'-1"	17'-6"	22'-1"	17'-6"	20'-1"	20'-1"	15'-11"	13'-11"	13'-11" f	13'-11"	12'-0"
	16		22'-11"	18'-3"	15'-11"	20'-1"	15'-11"	18'-3"	18'-3"	14'-5"	12'-7"	12'-1" f	12'-1" f	10'-9"
	24		20'-1"	15'-11"	13'-11"	17'-3" f	13'-11"	15'-0" f	15'-0" f	12'-7"	10'-9"	9'-10" f	9'-10" f	---
550S125-18	12	33	21'-11 f	21'-11 f	21'-10"	17'-10" f	17'-10" f	17'-0"	15'-6" f	15'-6" f	15'-6" f	---	---	---
	16		14'-6" f	19'-0" f	17'-9"	15'-6" f	15'-6" f	15'-6" f	13'-5" f	13'-5" f	13'-5" f	---	---	---
	24		11'-10" f	15'-6" f	15'-6" f	12'-8" f	12'-8" f	12'-8" f	---	---	---	---	---	---
550S125-27	12	33	30'-4"	24'-8"	21'-10"	26'-9" f	21'-10"	19'-4"	23'-2" f	20'-0"	17'-8"	---	---	---
	16		27'-11"	22'-8"	20'-0"	23'-2" f	20'-0"	17'-8"	20'-1" f	18'-4"	16'-0"	---	---	---
	24		23'-2" f	20'-0"	17'-8"	18'-11" f	17'-8"	15'-5"	16'-5" f	16'-0"	---	---	---	---
550S125-30	12	33	30'-5"	24'-10"	22'-0"	27'-0"	22'-0"	19'-5"	24'-10"	20'-2"	17'-10"	16'-4" f	16'-4" f	15'-7"
	16		28'-0"	22'-9"	20'-2"	24'-10" f	20'-2"	17'-10"	21'-7" f	18'-6"	16'-2"	---	---	---
	24		24'-10"	20'-2"	17'-10"	20'-4" f	17'-10"	15'-7"	17'-7" f	16'-2"	---	---	---	---
600S125-18	12	33	23'-2' f	22'-9"	19'-11"	18'-11" f	18'-11" f	17'-5"	16'-4" f	16'-4" f	15'-10"	---	---	---
	16		20'-1" f	20'-1" f	18'-1"	16'-4" f	16'-4" f	15'-10"	14'-2" f	14'-2" f	14'-2"	---	---	---
	24		16'-4" f	16'-4" f	15'-10"	13'-4" f	13'-4" f	13'-4" f	---	---	---	---	---	---
600S125-27	12	33	32'-5" f	26'-9"	23'-5"	26'-5" f	23'-5"	20'-5"	22'-11" f	21'-3"	16'-10"	---	---	---
	16		28'-1" f	24'-4"	21'-3"	22'-11" f	21'-3"	18'-7"	19'-10" f	19'-4"	14'-7"	---	---	---
	24		22'-11" f	21'-3"	18'-7"	18'-8" f	18'-7"	16'-1"	16'-2" f	16'-2" f	---	---	---	---
600S125-30	12	33	34'-2"	27'-1"	23'-8"	28'-11" f	23'-8"	20'-8"	25'-0" f	21'-6"	18'-9"	16'-5" f	16'-5" f	16'-5" f
	16		30'-8" f	24'-7"	21'-6"	25''-0" f	21'-6"	18'-9"	21'-8" f	19'-6"	17'-1"	---	---	---
	24		25'-0" f	21'-6"	18'-9"	20'-5" f	18'-9"	16'-5"	17'-8" f	17'-1"	---	---	---	---
600S125-33	12	33	35'-4"	28'-1"	24'-6"	30'-10"	24'-6"	21'-5"	27'-10" f	22'-3"	19'-5"	18'-4" f	18'-4" f	16'-11"
	16		32'-1" f	25'-6"	22'-3"	27'-10" f	22'-3"	19'-5"	24'-1" f	20'-3"	17'-8"	15'-10" f	15'-10" f	---
	24		27'-10" f	22'-3"	19'-5"	22'-9" f	19'-5"	16'-11"	19'-8" f	17'-8"	---	---	---	---

See Interior Non-Structural Composite Table Notes

Limiting Wall Heights - Non-Composite

Interior Non-Structural Non-Composite Table Notes

1. 5 psf, 7.5 psf, and 10 psf loads have NOT been reduced for strength or deflection checks. Full lateral load is applied.
2. Calculated properties are based on AISI S100-16/S2-20, North American Specification for Cold-Formed Steel Structural Members.
3. Limiting heights are based on continuous support of each flange over the full length of the stud.
4. Limiting heights are based on steel properties only (non-composite).
5. Web crippling checks are based on end-one flange loading condition using 1-inch end bearing.



Interior Non-Structural Non-Composite

Stud Member	Spacing, in, oc	Fy, ksi	5 psf			7.5 psf			10 psf		
			L/120	L/240	L/360	L/120	L/240	L/360	L/120	L/240	L/360
162S125-18	12	33	9'-1"	7'-8"	6'-8"	7'-5"	6'-8"	5'-10"	6'-5"	6'-1"	5'-4"
	16		7'-10"	6'-11"	6'-1"	6'-5"	6'-1"	5'-4"	5'-7"	5'-6"	4'-10"
	24		6'-5"	6'-1"	5'-4"	5'-3"	5'-3"	4'-8"	4'-6"	4'-6"	4'-3"
162S125-27	12	33	11'-3"	8'-11"	7'-10"	9'-8"	7'-10"	6'-10"	8'-4"	7'-1"	6'-3"
	16		10'-3"	8'-2"	7'-1"	8'-4"	7'-1"	6'-3"	7'-3"	6'-6"	5'-8"
	24		8'-4"	7'-1"	6'-3"	6'-10"	6'-3"	5'-5"	5'-11"	5'-8"	4'-11"
162S125-30	12	33	11'-8"	9'-3"	8'-1"	10'-2"	8'-1"	7'-1"	8'-11"	7'-4"	6'-5"
	16		10'-7"	8'-5"	7'-4"	8'-11"	7'-4"	6'-5"	7'-9"	6'-8"	5'-10"
	24		8'-11"	7'-4"	6'-5"	7'-4"	6'-5"	5'-7"	6'-4"	5'-10"	5'-1"
162S125-33	12	33	12'-0"	9'-6"	8'-4"	10'-6"	8'-4"	7'-3"	9'-6"	7'-7"	6'-7"
	16		10'-11"	8'-8"	7'-7"	9'-6"	7'-7"	6'-7"	8'-4"	6'-11"	6'-0"
	24		9'-6"	7'-7"	6'-7"	7'-10"	6'-7"	5'-9"	6'-9"	6'-0"	5'-3"
250S125-18	12	33	12'-4"	10'-7"	9'-3"	10'-1"	9'-3"	8'-1"	8'-9"	8'-5"	7'-4"
	16		10'-8"	9'-7"	8'-5"	8'-9"	8'-5"	7'-4"	7'-7"	7'-7"	6'-8"
	24		8'-9"	8'-5"	7'-4"	7'-1"	7'-1"	6'-5"	6'-2"	6'-2"	5'-10"
250S125-27	12	33	15'-7"	12'-5"	10'-10"	12'-11"	10'-10"	9'-5"	11'-3"	9'-10"	8'-7"
	16		13'-9"	11'-3"	9'-10"	11'-3"	9'-10"	8'-7"	9'-9"	8'-11"	7'-10"
	24		11'-3"	9'-10"	8'-7"	9'-2"	8'-7"	7'-6"	7'-11"	7'-10"	6'-10"
250S125-30	12	33	16'-1"	12'-9"	11'-2"	13'-9"	11'-2"	9'-9"	11'-11"	10'-2"	8'-10"
	16		14'-7"	11'-7"	10'-2"	11'-11"	10'-2"	8'-10"	10'-4"	9'-2"	8'-1"
	24		11'-11"	10'-2"	8'-10"	9'-9"	8'-10"	7'-9"	8'-5"	8'-1"	7'-0"
250S125-33	12	33	16'-8"	13'-2"	11'-6"	14'-6"	11'-6"	10'-1"	12'-9"	10'-6"	9'-2"
	16		15'-1"	12'-0"	10'-6"	12'-9"	10'-6"	9'-2"	11'-1"	9'-6"	8'-4"
	24		12'-9"	10'-6"	9'-2"	10'-5"	9'-2"	8'-0"	9'-0"	8'-4"	7'-3"
250S125-43	12	33	18'-1"	14'-4"	12'-7"	15'-10"	12'-7"	10'-11"	14'-4"	11'-5"	9'-11"
	16		16'-5"	13'-1"	11'-5"	14'-4"	11'-5"	9'-11"	13'-1"	10'-4"	9'-1"
	24		14'-4"	11'-5"	9'-11"	12'-5"	9'-11"	8'-8"	10'-9"	9'-1"	7'-11"
250S125-54	12	33	19'-4"	15'-5"	13'-5"	16'-11"	13'-5"	11'-9"	15'-5"	12'-2"	10'-8"
	16		17'-7"	14'-0"	12'-2"	15'-5"	12'-2"	10'-8"	14'-0"	11'-1"	9'-8"
	24		15'-5"	12'-2"	10'-8"	13'-5"	10'-8"	9'-4"	11'-11"	9'-8"	8'-6"
350S125-18	12	33	14'-0"	13'-10"	12'-1"	11'-6"	11'-6"	10'-7"	9'-11"	9'-11"	9'-7"
	16		12'-2"	12'-2"	11'-0"	9'-11"	9'-11"	9'-7"	8'-7"	8'-7"	8'-7"
	24		9'-11"	9'-11"	9'-7"	8'-1"	8'-1"	8'-1"	7'-0"	7'-0"	7'-0"
350S125-27	12	33	18'-10"	16'-1"	14'-0"	15'-5"	14'-0"	12'-3"	13'-4"	12'-9"	11'-1"
	16		16'-4"	14'-7"	12'-9"	13'-4"	12'-9"	11'-1"	11'-7"	11'-7"	10'-1"
	24		13'-4"	12'-9"	11'-1"	10'-11"	10'-11"	9'-9"	9'-5"	9'-5"	8'-10"
350S125-30	12	33	20'-3"	16'-7"	14'-6"	16'-6"	14'-6"	12'-8"	14'-4"	13'-2"	11'-6"
	16		17'-6"	15'-0"	13'-2"	14'-4"	13'-2"	11'-6"	12'-5"	11'-11"	10'-5"
	24		14'-4"	13'-2"	11'-6"	11'-8"	11'-6"	10'-0"	10'-1"	10'-1"	9'-1"
350S125-33	12	33	21'-7"	17'-1"	14'-11"	17'-10"	14'-11"	13'-1"	15'-5"	13'-7"	11'-10"
	16		18'-11"	15'-7"	13'-7"	15'-5"	13'-7"	11'-10"	13'-4"	12'-4"	10'-9"
	24		15'-5"	13'-7"	11'-10"	12'-7"	11'-10"	10'-4"	10'-11"	10'-9"	9'-5"
350S125-43	12	33	23'-6"	18'-8"	16'-3"	20'-6"	16'-3"	14'-3"	18'-8"	14'-10"	12'-11"
	16		21'-4"	16'-11"	14'-10"	18'-8"	14'-10"	12'-11"	16'-2"	13'-5"	11'-9"
	24		18'-8"	14'-10"	12'-11"	15'-3"	12'-11"	11'-4"	13'-3"	11'-9"	10'-3"
350S125-54	12	33	25'-2"	20'-0"	17'-5"	22'-0"	17'-5"	15'-3"	20'-0"	15'-10"	13'-10"
	16		22'-10"	18'-2"	15'-10"	20'-0"	15'-10"	13'-10"	18'-1"	14'-5"	12'-7"
	24		20'-0"	15'-10"	13'-10"	17'-1"	13'-10"	12'-1"	14'-10"	12'-7"	11'-0"
362S125-18	12	33	14'-4"	14'-3"	12'-5"	11'-8"	11'-8"	10'-10"	10'-1"	10'-1"	9'-10"
	16		12'-5"	12'-5"	11'-4"	10'-1"	10'-1"	9'-10"	8'-9"	8'-9"	8'-9"
	24		10'-1"	10'-1"	9'-10"	8'-3"	8'-3"	8'-3"	7'-2"	7'-2"	7'-2"
362S125-27	12	33	19'-3"	16'-6"	14'-5"	15'-9"	14'-5"	12'-7"	13'-7"	13'-1"	11'-5"
	16		16'-8"	15'-0"	13'-1"	13'-7"	13'-1"	11'-5"	11'-9"	11'-9"	10'-5"
	24		13'-7"	13'-1"	11'-5"	11'-1"	11'-1"	10'-0"	9'-8"	9'-8"	9'-1"

See Interior Non-Structural Non-Composite Table Notes

Interior Non-Structural Non-Composite

Stud Member	Spacing, in, oc	Fy, ksi	5 psf			7.5 psf			10 psf		
			L/120	L/240	L/360	L/120	L/240	L/360	L/120	L/240	L/360
362S125-30	12	33	20'-8"	17'-0"	14'-10"	16'-11"	14'-10"	13'-0"	14'-7"	13'-6"	11'-10"
	16		17'-11"	15'-5"	13'-6"	14'-7"	13'-6"	11'-10"	12'-8"	12'-3"	10'-9"
	24		14'-7"	13'-6"	11'-10"	11'-11"	11'-10"	10'-4"	10'-4"	10'-4"	9'-4"
362S125-33	12	33	22'-2"	17'-7"	15'-4"	18'-3"	15'-4"	13'-5"	15'-9"	14'-0"	12'-2"
	16		19'-4"	16'-0"	14'-0"	15'-9"	14'-0"	12'-2"	13'-8"	12'-8"	11'-1"
	24		15'-9"	14'-0"	12'-2"	12'-11"	12'-2"	10'-8"	11'-2"	11'-1"	9'-8"
362S125-43	12	33	24'-2"	19'-2"	16'-9"	21'-1"	16'-9"	14'-8"	19'-1"	15'-3"	13'-3"
	16		21'-11"	17'-5"	15'-3"	19'-1"	15'-3"	13'-3"	16'-7"	13'-10"	12'-1"
	24		19'-1"	15'-3"	13'-3"	15'-7"	13'-3"	11'-7"	13'-6"	12'-1"	10'-7"
362S125-54	12	33	25'-11"	20'-7"	17'-11"	22'-7"	17'-11"	15'-8"	20'-7"	16'-4"	14'-3"
	16		23'-6"	18'-8"	16'-4"	20'-7"	16'-4"	14'-3"	18'-7"	14'-10"	12'-11"
	24		20'-7"	16'-4"	14'-3"	17'-6"	14'-3"	12'-5"	15'-2"	12'-11"	11'-4"
400S125-181	12	33	13'-10"	13'-10"	13'-5"	11'-3"	11'-3"	11'-3"	9'-9"	9'-9"	9'-9"
	16		12'-0"	12'-0"	12'-0"	9'-9"	9'-9"	9'-9"	8'-6"	8'-6"	8'-6"
	24		9'-9"	9'-9"	9'-9"	8'-0"	8'-0"	8'-0"	6'-11"	6'-11"	6'-11"
400S125-27	12	33	20'-5"	17'-10"	15'-7"	16'-8"	15'-7"	13'-7"	14'-5"	14'-2"	12'-4"
	16		17'-8"	16'-2"	14'-2"	14'-5"	14'-2"	12'-4"	12'-6"	12'-6"	11'-3"
	24		14'-5"	14'-2"	12'-4"	11'-9"	11'-9"	10'-9"	10'-2"	10'-2"	9'-10"
400S125-30	12	33	21'-11"	18'-5"	16'-1"	17'-11"	16'-1"	14'-0"	15'-6"	14'-7"	12'-9"
	16		19'-0"	16'-8"	14'-7"	15'-6"	14'-7"	12'-9"	13'-5"	13'-3"	11'-7"
	24		15'-6"	14'-7"	12'-9"	12'-8"	12'-8"	11'-2"	11'-0"	11'-0"	10'-1"
400S125-33	12	33	23'-8"	19'-0"	16'-7"	19'-4"	16'-7"	14'-6"	16'-9"	15'-1"	13'-2"
	16		20'-6"	17'-3"	15'-1"	16'-9"	15'-1"	13'-2"	14'-6"	13'-8"	12'-0"
	24		16'-9"	15'-1"	13'-2"	13'-8"	13'-2"	11'-6"	11'-10"	11'-10"	10'-6"
400S125-43	12	33	26'-1"	20'-9"	18'-1"	22'-10"	18'-1"	15'-10"	20'-4"	16'-5"	14'-4"
	16		23'-9"	18'-10"	16'-5"	20'-4"	16'-5"	14'-4"	17'-7"	14'-11"	13'-1"
	24		20'-4"	16'-5"	14'-4"	16'-7"	14'-4"	12'-7"	14'-5"	13'-1"	11'-5"
400S125-54	12	33	28'-0"	22'-3"	19'-5"	24'-5"	19'-5"	16'-11"	22'-3"	17'-8"	15'-5"
	16		25'-5"	20'-2"	17'-8"	22'-3"	17'-8"	15'-5"	19'-10"	16'-0"	14'-0"
	24		22'-3"	17'-8"	15'-5"	18'-9"	15'-5"	13'-5"	16'-3"	14'-0"	12'-3"
550S125-182	12	33	16'-11"	16'-11"	16'-9"	13'-9"	13'-9"	13'-9"	11'-11"	11'-11"	11'-11"
	16		14'-7"	14'-7"	14'-7"	11'-11"	11'-11"	11'-11"	10'-4"	10'-4"	10'-4"
	24		11'-11"	11'-11"	11'-11"	9'-9"	9'-9"	9'-9"	8'-5"	8'-5"	8'-5"
550S125-27	12	33	25'-0"	22'-9"	19'-11"	20'-5"	19'-11"	17'-5"	17'-8"	17'-8"	15'-9"
	16		21'-8"	20'-8"	18'-1"	17'-8"	17'-8"	15'-9"	15'-4"	15'-4"	14'-4"
	24		17'-8"	17'-8"	15'-9"	14'-5"	14'-5"	13'-9"	12'-6"	12'-6"	12'-6"
550S125-30	12	33	26'-11"	23'-7"	20'-7"	22'-0"	20'-7"	18'-0"	19'-0"	18'-9"	16'-4"
	16		23'-4"	21'-5"	18'-9"	19'-0"	18'-9"	16'-4"	16'-6"	16'-6"	14'-10"
	24		19'-0"	18'-9"	16'-4"	15'-7"	15'-7"	14'-3"	13'-6"	13'-6"	13'-0"
550S125-33	12	33	29'-1"	24'-5"	21'-4"	23'-9"	21'-4"	18'-8"	20'-7"	19'-5"	16'-11"
	16		25'-2"	22'-3"	19'-5"	20'-7"	19'-5"	16'-11"	17'-10"	17'-8"	15'-5"
	24		20'-7"	19'-5"	16'-11"	16'-10"	16'-10"	14'-10"	14'-7"	14'-7"	13'-5"
550S125-43	12	33	33'-8"	26'-9"	23'-4"	29'-5"	23'-4"	20'-5"	25'-5"	21'-3"	18'-7"
	16		30'-7"	24'-4"	21'-3"	25'-5"	21'-3"	18'-7"	22'-1"	19'-3"	16'-10"
	24		25'-5"	21'-3"	18'-7"	20'-9"	18'-7"	16'-2"	18'-0"	16'-10"	14'-9"
550S125-54	12	33	36'-2"	28'-9"	25'-1"	31'-7"	25'-1"	21'-11"	28'-9"	22'-9"	19'-11"
	16		32'-10"	26'-1"	22'-9"	28'-9"	22'-9"	19'-11"	25'-2"	20'-8"	18'-1"
	24		28'-9"	22'-9"	19'-11"	23'-9"	19'-11"	17'-5"	20'-7"	18'-1"	15'-10"
600S125-182	12	33	17'-8"	17'-8"	17'-8"	14'-5"	14'-5"	14'-5"	12'-6"	12'-6"	12'-6"
	16		15'-4"	15'-4"	15'-4"	12'-6"	12'-6"	12'-6"	10'-10"	10'-10"	10'-10"
	24		12'-6"	12'-6"	12'-6"	10'-3"	10'-3"	10'-3"	8'-2"	8'-2"	8'-2"
600S125-271	12	33	24'-0"	24'-0"	21'-3"	19'-7"	19'-7"	18'-7"	17'-0"	17'-0"	16'-11"
	16		20'-10"	20'-10"	19'-4"	17'-0"	17'-0"	16'-11"	14'-8"	14'-8"	14'-8"
	24		17'-0"	17'-0"	16'-11"	13'-10"	13'-10"	13'-10"	12'-0"	12'-0"	12'-0"

See Interior Non-Structural Non-Composite Table Notes

Interior Non-Structural Non-Composite

Stud Member	Spacing, in, oc	Fy, ksi	5 psf			7.5 psf			10 psf		
			L/120	L/240	L/360	L/120	L/240	L/360	L/120	L/240	L/360
600S125-30	12	33	28'-3"	25'-3"	22'-0"	23'-1"	22'-0"	19'-3"	20'-0"	20'-0"	17'-6"
	16		24'-6"	22'-11"	20'-0"	20'-0"	20'-0"	17'-6"	17'-4"	17'-4"	15'-11"
	24		20'-0"	20'-0"	17'-6"	16'-4"	16'-4"	15'-3"	14'-2"	14'-2"	13'-10"
600S125-33	12	33	30'-7"	26'-2"	22'-10"	25'-0"	22'-10"	20'-0"	21'-7"	20'-9"	18'-2"
	16		26'-6"	23'-9"	20'-9"	21'-7"	20'-9"	18'-2"	18'-9"	18'-9"	16'-6"
	24		21'-7"	20'-9"	18'-2"	17'-8"	17'-8"	15'-10"	15'-3"	15'-3"	14'-5"
600S125-43	12	33	36'-2"	28'-9"	25'-1"	30'-11"	25'-1"	21'-11"	26'-9"	22'-10"	19'-11"
	16		32'-9"	26'-1"	22'-10"	26'-9"	22'-10"	19'-11"	23'-2"	20'-9"	18'-1"
	24		26'-9"	22'-10"	19'-11"	21'-10"	19'-11"	17'-5"	18'-11"	18'-1"	15'-10"
600S125-54	12	33	38'-10"	30'-10"	26'-11"	33'-11"	26'-11"	23'-6"	30'-10"	24'-6"	21'-5"
	16		35'-4"	28'-0"	24'-6"	30'-10"	24'-6"	21'-5"	26'-8"	22'-3"	19'-5"
	24		30'-10"	24'-6"	21'-5"	25'-2"	21'-5"	18'-8"	21'-9"	19'-5"	17'-0"
800S125-33	12	33	32'-11"	32'-8"	28'-7"	26'-10"	26'-10"	24'-11"	23'-3"	23'-3"	22'-8"
	16		28'-6"	28'-6"	25'-11"	23'-3"	23'-3"	22'-8"	20'-2"	20'-2"	20'-2"
	24		23'-3"	23'-3"	22'-8"	19'-0"	19'-0"	19'-0"	16'-5"	16'-5"	16'-5"
800S125-43	12	33	44'-5"	36'-2"	31'-7"	36'-4"	31'-7"	27'-7"	31'-5"	28'-8"	25'-1"
	16		38'-6"	32'-10"	28'-8"	31'-5"	28'-8"	25'-1"	27'-3"	26'-1"	22'-9"
	24		31'-5"	28'-8"	25'-1"	25'-8"	25'-1"	21'-11"	22'-3"	22'-3"	19'-11"
800S125-54	12	33	49'-4"	39'-2"	34'-2"	42'-3"	34'-2"	29'-10"	36'-7"	31'-1"	27'-2"
	16		44'-10"	35'-7"	31'-1"	36'-7"	31'-1"	27'-2"	31'-9"	28'-3"	24'-8"
	24		36'-7"	31'-1"	27'-2"	29'-11"	27'-2"	23'-8"	25'-11"	24'-8"	21'-6"

See Interior Non-Structural Non-Composite Table Notes



Limiting Wall Heights - Curtain Wall Single Span

Wall Height Table Notes

1. Lateral loads have not been modified for strength checks: full loads are applied.
2. Calculated properties are based on AISI S100-16/S2-20, North American Specification for Cold-Formed Steel Structural Members.
3. For 15 psf or higher wind pressure, read the note below.

   IBC 2021/ASCE 7-16: Due to the change in the model building codes, design wind pressures determined using IBC 2021/ASCE 7-16 or later are strength level loads (LRFD) in comparison to those determined in earlier IBC codes which were service level loads (ASD). The load/span tables that follow are based on service level (ASD) wind loads. Therefore, to properly use the load/span tables in this catalog, multiply the IBC 2021/ASCE 7-16 design wind pressures by 0.6 (Reference Section 2.4 ASCE 7-16) prior to entering the load/span tables.
   Example:
   • ASCE 7-16 Calculated Design Wind Pressure = 25 psf (Strength level loads, LRFD)
   • Convert to service level loads (ASD) = 25 psf x 0.6 = 15 psf
   • Use 15 psf as the Pressure Value used in this Table to determine the member span

   Any Other Building Code: The load/span tables that follow are based on service level (ASD) wind loads. If the wind load being used meets this criterion, it does not need to be modified prior to using the tables.
4. 15 psf and higher wind pressures have been multiplied by 0.7 x ASD loads, or 0.42 x Ultimate loads for deflection determination, in accordance with footnote "f" of IBC table 1604.3. The 5 psf live load has not been reduced for deflection checks
5. Limiting heights are based on continuous support of each flange over the full length of the stud.
6. Limiting heights are based on steel properties alone (non-composite).
7. Web crippling checks are based on end-one flange loading condition using 1-inch end bearing.
8. End shear and web crippling capacity have not been reduced for punchouts. Punchouts are assumed to be at least 10-inches from the end of members, in accordance with AISI S240-20, Section A5.9.
9. Where limiting heights are followed by "e", web stiffeners are required.

Wall Height

Stud Member	Spacing, in, oc	Fy, ksi	5 psf			15 psf			20 psf			25 psf			30 psf			35 psf			40 psf		
			L/120	L/240	L/360	L/240	L/360	L/600	L/240	L/360	L/600	L/240	L/360	L/600	L/240	L/360	L/600	L/240	L/360	L/600	L/240	L/360	L/600
250S137-33	12	33	17'-6"	13'-10"	12'-1"	10'-10"	9'-5"	8'-0"	9'-10"	8'-7"	7'-3"	9'-1"	8'-0"	6'-9"	8'-3"	7'-6"	6'-4"	7'-8"	7'-2"	6'-0"	7'-2"e	6'-10"	5'-9"
	16		15'-10"	12'-7"	11'-0"	9'-10"	8'-7"	7'-3"	8'-10"	7'-10"	6'-7"	7'-10"	7'-3"	6'-1"	7'-2"e	6'-10"	5'-9"	6'-8"e	6'-6"e	5'-6"	6'-3"e	6'-2"e	5'-3"
	24		13'-10"	11'-0"	9'-7"	8'-3"	7'-6"	6'-4"	7'-2"e	6'-10"	5'-9"	6'-5"e	6'-4"e	5'-4"	5'-10"e	5'-10"e	5'-0"e	5'-5"e	5'-5"e	4'-9"e	5'-1"e	5'-1"e	4'-7"e
250S137-43	12	33	19'-0"	15'-1"	13'-2"	11'-9"	10'-3"	8'-8"	10'-8"	9'-4"	7'-10"	9'-11"	8'-8"	7'-4"	9'-4"	8'-2"	6'-11"	8'-10"	7'-9"	6'-6"	8'-5"	7'-5"	6'-3"
	16		17'-3"	13'-8"	11'-11"	10'-8"	9'-4"	7'-10"	9'-9"	8'-6"	7'-2"	9'-0"	7'-10"	6'-8"	8'-5"	7'-5"	6'-3"	7'-10"	7'-0"	5'-11"	7'-3"	6'-9"	5'-8"
	24		15'-1"	11'-11"	10'-5"	9'-4"	8'-2"	6'-11"	8'-5"	7'-5"	6'-3"	7'-6"	6'-11"	5'-10"	6'-10"	6'-6"	5'-6"	6'-4"	6'-2"	5'-2"	5'-11"	5'-11"	5'-0"
250S137-54	12	33	20'-3"	16'-1"	14'-1"	12'-7"	11'-0"	9'-3"	11'-5"	10'-0"	8'-5"	10'-7"	9'-3"	7'-10"	10'-0"	8'-9"	7'-4"	9'-6"	8'-3"	7'-0"	9'-1"	7'-11"	6'-8"
	16		18'-5"	14'-8"	12'-9"	11'-5"	10'-0"	8'-5"	10'-5"	9'-1"	7'-8"	9'-8"	8'-5"	7'-1"	9'-1"	7'-11"	6'-8"	8'-7"	7'-6"	6'-4"	8'-3"	7'-2"	6'-1"
	24		16'-1"	12'-9"	11'-2"	10'-0"	8'-9"	7'-4"	9'-1"	7'-11"	6'-8"	8'-5"	7'-4"	6'-2"	7'-11"	6'-11"	5'-10"	7'-5"	6'-7"	5'-7"	6'-11"	6'-3"	5'-4"
250S137-54	12	50	20'-3"	16'-1"	14'-1"	12'-7"	11'-0"	9'-3"	11'-5"	10'-0"	8'-5"	10'-7"	9'-3"	7'-10"	10'-0"	8'-9"	7'-4"	9'-6"	8'-3"	7'-0"	9'-1"	7'-11"	6'-8"
	16		18'-5"	14'-8"	12'-9"	11'-5"	10'-0"	8'-5"	10'-5"	9'-1"	7'-8"	9'-8"	8'-5"	7'-1"	9'-1"	7'-11"	6'-8"	8'-7"	7'-6"	6'-4"	8'-3"	7'-2"	6'-1"
	24		16'-1"	12'-9"	11'-2"	10'-0"	8'-9"	7'-4"	9'-1"	7'-11"	6'-8"	8'-5"	7'-4"	6'-2"	7'-11"	6'-11"	5'-10"	7'-6"	6'-7"	5'-7"	7'-2"	6'-3"	5'-4"
250S137-68	12	50	21'-8"	17'-2"	15'-0"	13'-5"	11'-9"	9'-11"	12'-2"	10'-8"	9'-0"	11'-4"	9'-11"	8'-4"	10'-8"	9'-4"	7'-10"	10'-1"	8'-10"	7'-5"	9'-8"	8'-5"	7'-1"
	16		19'-8"	15'-7"	13'-8"	12'-2"	10'-8"	9'-0"	11'-1"	9'-8"	8'-2"	10'-3"	9'-0"	7'-7"	9'-8"	8'-5"	7'-1"	9'-2"	8'-0"	6'-9"	8'-9"	7'-8"	6'-6"
	24		17'-2"	13'-8"	11'-11"	10'-8"	9'-4"	7'-10"	9'-8"	8'-5"	7'-1"	9'-0"	7'-10"	6'-7"	8'-5"	7'-5"	6'-3"	8'-0"	7'-0"	5'-11"	7'-8"	6'-8"	5'-8"
250S162-33	12	33	18'-4"	14'-7"	12'-9"	11'-4"	9'-11"	8'-5"	10'-4"	9'-0"	7'-7"	9'-7"	8'-5"	7'-1"	8'-10"	7'-11"	6'-8"	8'-3"	7'-6"	6'-4"	7'-8"e	7'-2"	6'-0"
	16		16'-8"	13'-3"	11'-7"	10'-4"	9'-0"	7'-7"	9'-5"	8'-2"	6'-11"	8'-5"	7'-7"	6'-5"	7'-8"e	7'-2"	6'-0"	7'-1"e	6'-10"e	5'-9"	6'-8"e	6'-6"e	5'-6"
	24		14'-7"	11'-7"	10'-1"	8'-10"	7'-11"	6'-8"	7'-8"e	7'-2"	6'-0"	6'-10"e	6'-8"e	5'-7"	6'-3"e	6'-3"e	5'-3"e	5'-10"e	5'-10"e	5'-0"e	5'-5"e	5'-5"e	4'-10"e
250S162-43	12	33	19'-11"	15'-10"	13'-10"	12'-4"	10'-10"	9'-1"	11'-3"	9'-10"	8'-3"	10'-5"	9'-1"	7'-8"	9'-10"	8'-7"	7'-3"	9'-4"	8'-2"	6'-10"	8'-11"	7'-9"	6'-7"
	16		18'-1"	14'-5"	12'-7"	11'-3"	9'-10"	8'-3"	10'-2"	8'-11"	7'-6"	9'-6"	8'-3"	7'-0"	8'-11"	7'-9"	6'-7"	8'-6"	7'-5"	6'-3"	8'-0"	7'-1"	6'-0"
	24		15'-10"	12'-7"	11'-0"	9'-10"	8'-7"	7'-3"	8'-11"	7'-9"	6'-7"	8'-3"	7'-3"	6'-1"	7'-7"	6'-10"	5'-9"	7'-0"	6'-6"	5'-5"	6'-7"	6'-2"	5'-3"
250S162-54	12	33	21'-4"	16'-11"	14'-9"	13'-3"	11'-7"	9'-9"	12'-0"	10'-6"	8'-10"	11'-2"	9'-9"	8'-3"	10'-6"	9'-2"	7'-9"	10'-0"	8'-8"	7'-4"	9'-6"	8'-4"	7'-0"
	16		19'-5"	15'-5"	13'-5"	12'-0"	10'-6"	8'-10"	10'-11"	9'-6"	8'-0"	10'-2"	8'-10"	7'-6"	9'-6"	8'-4"	7'-0"	9'-1"	7'-11"	6'-8"	8'-8"	7'-7"	6'-5"
	24		16'-11"	13'-5"	11'-9"	10'-6"	9'-2"	7'-9"	9'-6"	8'-4"	7'-0"	8'-10"	7'-9"	6'-6"	8'-4"	7'-3"	6'-2"	7'-11"	6'-11"	5'-10"	7'-5"	6'-7"	5'-7"
250S162-54	12	50	21'-4"	16'-11"	14'-9"	13'-3"	11'-7"	9'-9"	12'-0"	10'-6"	8'-10"	11'-2"	9'-9"	8'-3"	10'-6"	9'-2"	7'-9"	10'-0"	8'-8"	7'-4"	9'-6"	8'-4"	7'-0"
	16		19'-5"	15'-5"	13'-5"	12'-0"	10'-6"	8'-10"	10'-11"	9'-6"	8'-0"	10'-2"	8'-10"	7'-6"	9'-6"	8'-4"	7'-0"	9'-1"	7'-11"	6'-8"	8'-8"	7'-7"	6'-5"
	24		16'-11"	13'-5"	11'-9"	10'-6"	9'-2"	7'-9"	9'-6"	8'-4"	7'-0"	8'-10"	7'-9"	6'-6"	8'-4"	7'-3"	6'-2"	7'-11"	6'-11"	5'-10"	7'-7"	6'-7"	5'-7"
250S162-68	12	50	22'-9"	18'-1"	15'-10"	14'-1"	12'-4"	10'-5"	12'-10"	11'-2"	9'-5"	11'-11"	10'-5"	8'-9"	11'-2"	9'-9"	8'-3"	10'-8"	9'-4"	7'-10"	10'-2"	8'-11"	7'-6"
	16		20'-8"	16'-5"	14'-4"	12'-10"	11'-2"	9'-5"	11'-8"	10'-2"	8'-7"	10'-10"	9'-5"	8'-0"	10'-2"	8'-11"	7'-6"	9'-8"	8'-5"	7'-1"	9'-3"	8'-1"	6'-10"
	24		18'-1"	14'-4"	12'-6"	11'-2"	9'-9"	8'-3"	10'-2"	8'-11"	7'-6"	9'-5"	8'-3"	7'-0"	8'-11"	7'-9"	6'-7"	8'-5"	7'-5"	6'-3"	8'-1"	7'-1"	5'-11"
350S162-33	12	33	23'-9"	18'-10"	16'-5"	14'-8"	12'-10"	10'-10"	13'-2"e	11'-8"	9'-10"	11'-10"e	10'-10"e	9'-2"	10'-9"e	10'-2"e	8'-7"	10'-0"e	9'-8"e	8'-2"e	9'-4"e	9'-3"e	7'-10"e
	16		21'-7"	17'-1"	14'-11"	13'-2"e	11'-8"	9'-10"	11'-5"e	10'-7"e	8'-11"	10'-3"e	9'-10"e	8'-4"e	9'-4"e	9'-3"e	7'-10"e	8'-8"e	8'-8"e	7'-5"e	8'-1"e	8'-1"e	7'-1"e
	24		18'-8"	14'-11"	13'-1"	10'-9"e	10'-2"e	8'-7"	9'-4"e	9'-3"e	7'-10"e	8'-4"e	8'-4"e	7'-3"e	7'-7"e	7'-7"e	6'-10"e	7'-1"e	7'-1"e	6'-6"e	6'-7"e	6'-7"e	6'-2"e
350S162-43	12	33	25'-10"	20'-6"	17'-11"	16'-0"	14'-0"	11'-9"	14'-6"	12'-8"	10'-8"	13'-6"	11'-9"	9'-11"	12'-8"	11'-1"	9'-4"	11'-8"	10'-6"	8'-11"	10'-11"	10'-1"	8'-6"
	16		23'-5"	18'-7"	16'-3"	14'-6"	12'-8"	10'-8"	13'-2"	11'-6"	9'-9"	12'-0"	10'-8"	9'-0"	10'-11"	10'-1"	8'-6"	10'-2"	9'-7"	8'-1"	9'-6"	9'-2"	7'-9"
	24		20'-6"	16'-3"	14'-2"	12'-8"	11'-1"	9'-4"	10'-11"	10'-1"	8'-6"	9'-9"	9'-4"	7'-11"	8'-11"e	8'-10"e	7'-5"	8'-3"e	8'-3"e	7'-1"	7'-9"e	7'-9"e	6'-9"e
350S162-54	12	33	27'-8"	21'-11"	19'-2"	17'-2"	15'-0"	12'-7"	15'-7"	13'-7"	11'-6"	14'-5"	12'-7"	10'-8"	13'-7"	11'-11"	10'-0"	12'-11"	11'-3"	9'-6"	12'-4"	10'-9"	9'-1"
	16		25'-1"	19'-11"	17'-5"	15'-7"	13'-7"	11'-6"	14'-2"	12'-4"	10'-5"	13'-1"	11'-6"	9'-8"	12'-4"	10'-9"	9'-1"	11'-9"	10'-3"	8'-8"	11'-2"	9'-10"	8'-3"
	24		21'-11"	17'-5"	15'-2"	13'-7"	11'-11"	10'-0"	12'-4"	10'-9"	9'-1"	11'-6"	10'-0"	8'-5"	10'-7"	9'-5"	7'-11"	9'-9"	8'-11"	7'-7"	9'-2"	8'-7"	7'-3"
350S162-54	12	50	27'-8"	21'-11"	19'-2"	17'-2"	15'-0"	12'-7"	15'-7"	13'-7"	11'-6"	14'-5"	12'-7"	10'-8"	13'-7"	11'-11"	10'-0"	12'-11"	11'-3"	9'-6"	12'-4"	10'-9"	9'-1"
	16		25'-1"	19'-11"	17'-5"	15'-7"	13'-7"	11'-6"	14'-2"	12'-4"	10'-5"	13'-1"	11'-6"	9'-8"	12'-4"	10'-9"	9'-1"	11'-9"	10'-3"	8'-8"	11'-3"	9'-10"	8'-3"
	24		21'-11"	17'-5"	15'-2"	13'-7"	11'-11"	10'-0"	12'-4"	10'-9"	9'-1"	11'-6"	10'-0"	8'-5"	10'-9"	9'-5"	7'-11"	10'-3"	8'-11"	7'-7"	9'-10"	8'-7"	7'-3"
350S162-68	12	50	29'-7"	23'-6"	20'-6"	18'-4"	16'-0"	13'-6"	16'-8"	14'-7"	12'-3"	15'-5"	13'-6"	11'-5"	14'-7"	12'-8"	10'-9"	13'-10"	12'-1"	10'-2"	13'-3"	11'-7"	9'-9"
	16		26'-10"	21'-4"	18'-7"	16'-8"	14'-7"	12'-3"	15'-1"	13'-3"	11'-2"	14'-0"	12'-3"	10'-4"	13'-3"	11'-7"	9'-9"	12'-7"	11'-0"	9'-3"	12'-0"	10'-6"	8'-10"
	24		23'-6"	18'-7"	16'-3"	14'-7"	12'-8"	10'-9"	13'-3"	11'-7"	9'-9"	12'-3"	10'-9"	9'-0"	11'-7"	10'-1"	8'-6"	11'-0"	9'-7"	8'-1"	10'-6"	9'-2"	7'-9"
350S162-97	12	50	32'-7"	25'-11"	22'-7"	20'-3"	17'-8"	14'-11"	18'-4"	16'-0"	13'-6"	17'-1"	14'-11"	12'-7"	16'-0"	14'-0"	11'-10"	15'-3"	13'-4"	11'-3"	14'-7"	12'-9"	10'-9"
	16		29'-8"	23'-6"	20'-7"	18'-4"	16'-0"	13'-6"	16'-8"	14'-7"	12'-4"	15'-6"	13'-6"	11'-5"	14'-7"	12'-9"	10'-9"	13'-10"	12'-1"	10'-2"	13'-3"	11'-7"	9'-9"
	24		25'-11"	20'-7"	17'-11"	16'-0"	14'-0"	11'-10"	14'-7"	12'-9"	10'-9"	13'-6"	11'-10"	10'-0"	12'-9"	11'-1"	9'-5"	12'-1"	10'-7"	8'-11"	11'-7"	10'-1"	8'-6"
350S200-43	12	33	27'-3"	21'-8"	18'-11"	16'-11"	14'-9"	12'-5"	15'-4"	13'-5"	11'-4"	14'-3"	12'-5"	10'-6"	13'-5"	11'-9"	9'-11"	12'-6"	11'-1"	9'-5"	11'-9"	10'-8"	9'-0"
	16		24'-9"	19'-8"	17'-2"	15'-4"	13'-5"	11'-4"	13'-11"	12'-2"	10'-3"	12'-10"	11'-4"	9'-6"	11'-9"	10'-8"	9'-0"	10'-10"	10'-1"	8'-6"	10'-2"e	9'-8"e	8'-2"
	24		21'-8"	17'-2"	15'-0"	13'-5"	11'-9"	9'-11"	11'-9"	10'-8"	9'-0"	10'-6"e	9'-11"	8'-4"	9'-7"e	9'-4"e	7'-10"	8'-10"e	8'-10"e	7'-5"e	8'-4"e	8'-4"e	7'-1"e
350S200-54	12	33	29'-3"	23'-2"	20'-3"	18'-1"	15'-10"	13'-4"	16'-5"	14'-4"	12'-1"	15'-3"	13'-4"	11'-3"	14'-4"	12'-7"	10'-7"	13'-8"	11'-11"	10'-1"	13'-1"	11'-5"	9'-7"
	16		26'-6"	21'-1"	18'-5"	16'-5"	14'-4"	12'-1"	14'-11"	13'-1"	11'-0"	13'-10"	12'-1"	10'-3"	13'-1"	11'-5"	9'-7"	12'-5"	10'-10"	9'-2"	11'-10"	10'-4"	8'-9"
	24		23'-2"	18'-5"	16'-1"	14'-4"	12'-7"	10'-7"	13'-1"	11'-5"	9'-7"	12'-1"	10'-7"	8'-11"	11'-4"	10'-0"	8'-5"	10'-6"	9'-6"	8'-0"	9'-10"	9'-1"	7'-8"

See Curtain Wall Limiting Heights Table Notes

Wall Height

Stud Member	Spacing, in, oc	Fy, ksi	5 psf			15 psf			20 psf			25 psf			30 psf			35 psf			40 psf		
			L/120	L/240	L/360	L/240	L/360	L/600	L/240	L/360	L/600	L/240	L/360	L/600	L/240	L/360	L/600	L/240	L/360	L/600	L/240	L/360	L/600
350S200-54	12	50	29'-3"	23'-2"	20'-3"	18'-1"	15'-10"	13'-4"	16'-5"	14'-4"	12'-1"	15'-3"	13'-4"	11'-3"	14'-4"	12'-7"	10'-7"	13'-8"	11'-11"	10'-1"	13'-1"	11'-5"	9'-7"
	16		26'-6"	21'-1"	18'-5"	16'-5"	14'-4"	12'-1"	14'-11"	13'-1"	11'-0"	13'-10"	12'-1"	10'-3"	13'-1"	11'-5"	9'-7"	12'-5"	10'-10"	9'-2"	11'-10"	10'-4"	8'-9"
	24		23'-2"	18'-5"	16'-1"	14'-4"	12'-7"	10'-7"	13'-1"	11'-5"	9'-7"	12'-1"	10'-7"	8'-11"	11'-5"	10'-0"	8'-5"	10'-10"	9'-6"	8'-0"	10'-4"	9'-1"	7'-8"
350S200-68	12	50	31'-3"	24'-10"	21'-8"	19'-5"	16'-11"	14'-3"	17'-7"	15'-5"	13'-0"	16'-4"	14'-3"	12'-1"	15'-5"	13'-5"	11'-4"	14'-7"	12'-9"	10'-9"	14'-0"	12'-3"	10'-4"
	16		28'-5"	22'-7"	19'-8"	17'-7"	15'-5"	13'-0"	16'-0"	14'-0"	11'-10"	14'-10"	13'-0"	10'-11"	14'-0"	12'-3"	10'-4"	13'-3"	11'-7"	9'-9"	12'-8"	11'-1"	9'-4"
	24		24'-10"	19'-8"	17'-3"	15'-5"	13'-5"	11'-4"	14'-0"	12'-3"	10'-4"	13'-0"	11'-4"	9'-7"	12'-3"	10'-8"	9'-0"	11'-7"	10'-2"	8'-7"	11'-1"	9'-8"	8'-2"
350S200-97	12	50	34'-7"	27'-5"	24'-0"	21'-5"	18'-9"	15'-10"	19'-6"	17'-0"	14'-4"	18'-1"	15'-10"	13'-4"	17'-0"	14'-10"	12'-6"	16'-2"	14'-1"	11'-11"	15'-6"	13'-6"	11'-5"
	16		31'-5"	24'-11"	21'-9"	19'-6"	17'-0"	14'-4"	17'-8"	15'-6"	13'-0"	16'-5"	14'-4"	12'-1"	15'-6"	13'-6"	11'-5"	14'-8"	12'-10"	10'-10"	14'-1"	12'-3"	10'-4"
	24		27'-5"	21'-9"	19'-0"	17'-0"	14'-10"	12'-6"	15'-6"	13'-6"	11'-5"	14'-4"	12'-6"	10'-7"	13'-6"	11'-10"	9'-11"	12'-10"	11'-2"	9'-5"	12'-3"	10'-9"	9'-0"
362S137-33	12	33	23'-3"	18'-5"	16'-1"	14'-5"	12'-7"	10'-7"	12'-7"	11'-5"	9'-8"	11'-3"e	10'-7"e	8'-11"	10'-3"e	10'-0"e	8'-5"	9'-6"e	9'-6"e	8'-0"e	8'-11"e	8'-11"e	7'-8"e
	16		21'-1"	16'-9"	14'-8"	12'-7"	11'-5"	9'-8"	10'-11"e	10'-5"e	8'-9"	9'-9"e	9'-8"e	8'-2"e	8'-11"e	8'-11"e	7'-8"e	8'-3"e	8'-3"e	7'-3"e	7'-8"e	7'-8"e	6'-11"e
	24		17'-9"	14'-8"	12'-10"	10'-3"e	10'-0"e	8'-5"	8'-11"e	8'-11"e	7'-8"e	7'-11"e	7'-11"e	7'-1"e	7'-3"e	7'-3"e	6'-8"e	6'-9"e	6'-9"e	6'-4"e	6'-3"e	6'-3"e	6'-1"e
362S137-43	12	33	25'-3"	20'-1"	17'-6"	15'-8"	13'-8"	11'-7"	14'-3"	12'-5"	10'-6"	13'-2"	11'-7"	9'-9"	12'-0"	10'-10"	9'-2"	11'-1"	10'-4"	8'-8"	10'-5"	9'-10"	8'-4"
	16		23'-0"	18'-3"	15'-11"	14'-3"	12'-5"	10'-6"	12'-9"	11'-4"	9'-6"	11'-5"	10'-6"	8'-10"	10'-5"	9'-10"	8'-4"	9'-7"	9'-5"	7'-11"	9'-0"	9'-0"	7'-7"
	24		20'-1"	15'-11"	13'-11"	12'-0"	10'-10"	9'-2"	10'-5"	9'-10"	8'-4"	9'-4"	9'-2"	7'-9"	8'-6"	8'-6"	7'-3"	7'-10"e	7'-10"e	6'-11"	7'-4"e	7'-4"e	6'-7"e
362S137-54	12	33	27'-1"	21'-6"	18'-9"	16'-9"	14'-8"	12'-4"	15'-3"	13'-4"	11'-3"	14'-2"	12'-4"	10'-5"	13'-4"	11'-8"	9'-10"	12'-8"	11'-1"	9'-4"	12'-1"	10'-7"	8'-11"
	16		24'-7"	19'-6"	17'-1"	15'-3"	13'-4"	11'-3"	13'-10"	12'-1"	10'-2"	12'-10"	11'-3"	9'-6"	12'-1"	10'-7"	8'-11"	11'-3"	10'-0"	8'-6"	10'-6"	9'-7"	8'-1"
	24		21'-6"	17'-1"	14'-11"	13'-4"	11'-8"	9'-10"	12'-1"	10'-7"	8'-11"	10'-10"	9'-10"	8'-3"	9'-11"	9'-3"	7'-9"	9'-2"	8'-9"	7'-5"	8'-7"	8'-5"	7'-1"
362S137-54	12	50	27'-1"	21'-6"	18'-9"	16'-9"	14'-8"	12'-4"	15'-3"	13'-4"	11'-3"	14'-2"	12'-4"	10'-5"	13'-4"	11'-8"	9'-10"	12'-8"	11'-1"	9'-4"	12'-1"	10'-7"	8'-11"
	16		24'-7"	19'-6"	17'-1"	15'-3"	13'-4"	11'-3"	13'-10"	12'-1"	10'-2"	12'-10"	11'-3"	9'-6"	12'-1"	10'-7"	8'-11"	11'-6"	10'-0"	8'-6"	11'-0"	9'-7"	8'-1"
	24		21'-6"	17'-1"	14'-11"	13'-4"	11'-8"	9'-10"	12'-1"	10'-7"	8'-11"	11'-3"	9'-10"	8'-3"	10'-7"	9'-3"	7'-9"	10'-0"	8'-9"	7'-5"	9'-7"	8'-5"	7'-1"
362S137-68	12	50	28'-11"	23'-0"	20'-1"	17'-11"	15'-8"	13'-3"	16'-3"	14'-3"	12'-0"	15'-1"	13'-3"	11'-2"	14'-3"	12'-5"	10'-6"	13'-6"	11'-10"	10'-0"	12'-11"	11'-4"	9'-6"
	16		26'-3"	20'-10"	18'-3"	16'-3"	14'-3"	12'-0"	14'-10"	12'-11"	10'-11"	13'-9"	12'-0"	10'-1"	12'-11"	11'-4"	9'-6"	12'-3"	10'-9"	9'-1"	11'-9"	10'-3"	8'-8"
	24		23'-0"	18'-3"	15'-11"	14'-3"	12'-5"	10'-6"	12'-11"	11'-4"	9'-6"	12'-0"	10'-6"	8'-10"	11'-4"	9'-10"	8'-4"	10'-9"	9'-4"	7'-11"	10'-3"	9'-0"	7'-7"
362S162-33	12	33	24'-4"	19'-4"	16'-11"	15'-1"	13'-2"	11'-1"	13'-6"e	12'-0"	10'-1"	12'-1"e	11'-1"e	9'-5"	11'-0"e	10'-6"e	8'-10"e	10'-2"e	9'-11"e	8'-5"e	9'-6"e	9'-6"e	8'-0"e
	16		22'-2"	17'-7"	15'-4"	13'-6"e	12'-0"	10'-1"	11'-8"e	10'-11"e	9'-2"	10'-5"e	10'-1"e	8'-6"e	9'-6"e	9'-6"e	8'-0"e	8'-10"e	8'-10"e	7'-7"e	8'-3"e	8'-3"e	7'-3"e
	24		19'-0"	15'-4"	13'-5"	11'-0"e	10'-6"e	8'-10"e	9'-6"e	9'-6"e	8'-0"e	8'-6"e	8'-6"e	7'-5"e	7'-9"e	7'-9"e	7'-0"e	7'-2"e	7'-2"e	6'-8"e	6'-9"e	6'-9"e	6'-4"e
362S162-43	12	33	26'-6"	21'-0"	18'-5"	16'-5"	14'-4"	12'-1"	14'-11"	13'-0"	11'-0"	13'-10"	12'-1"	10'-2"	12'-11"	11'-5"	9'-7"	11'-11"	10'-10"	9'-2"	11'-2"	10'-4"	8'-9"
	16		24'-1"	19'-1"	16'-8"	14'-11"	13'-0"	11'-0"	13'-7"	11'-10"	10'-0"	12'-3"	11'-0"	9'-3"	11'-2"	10'-4"	8'-9"	10'-4"	9'-10"	8'-3"	9'-8"e	9'-5"	7'-11"
	24		21'-0"	16'-8"	14'-7"	12'-11"	11'-5"	9'-7"	11'-2"	10'-4"	8'-9"	10'-0"	9'-7"	8'-1"	9'-2"e	9'-0"e	7'-7"	8'-5"e	8'-5"e	7'-3"	7'-11"e	7'-11"e	6'-11"e
362S162-54	12	33	28'-5"	22'-6"	19'-8"	17'-7"	15'-4"	13'-0"	16'-0"	14'-0"	11'-9"	14'-10"	13'-0"	10'-11"	14'-0"	12'-2"	10'-4"	13'-3"	11'-7"	9'-9"	12'-8"	11'-1"	9'-4"
	16		25'-10"	20'-6"	17'-11"	16'-0"	14'-0"	11'-9"	14'-6"	12'-8"	10'-8"	13'-6"	11'-9"	9'-11"	12'-8"	11'-1"	9'-4"	12'-1"	10'-6"	8'-11"	11'-4"	10'-1"	8'-6"
	24		22'-6"	17'-11"	15'-8"	14'-0"	12'-2"	10'-4"	12'-8"	11'-1"	9'-4"	11'-8"	10'-4"	8'-8"	10'-8"	9'-8"	8'-2"	9'-11"	9'-2"	7'-9"	9'-3"	8'-10"	7'-5"
362S162-54	12	50	28'-5"	22'-6"	19'-8"	17'-7"	15'-4"	13'-0"	16'-0"	14'-0"	11'-9"	14'-10"	13'-0"	10'-11"	14'-0"	12'-2"	10'-4"	13'-3"	11'-7"	9'-9"	12'-8"	11'-1"	9'-4"
	16		25'-10"	20'-6"	17'-11"	16'-0"	14'-0"	11'-9"	14'-6"	12'-8"	10'-8"	13'-6"	11'-9"	9'-11"	12'-8"	11'-1"	9'-4"	12'-1"	10'-6"	8'-11"	11'-6"	10'-1"	8'-6"
	24		22'-6"	17'-11"	15'-8"	14'-0"	12'-2"	10'-4"	12'-8"	11'-1"	9'-4"	11'-9"	10'-4"	8'-8"	10'-1"	9'-8"	8'-2"	10'-6"	9'-2"	7'-9"	10'-1"	8'-10"	7'-5"
362S162-68	12	50	30'-5"	24'-1"	21'-1"	18'-10"	16'-5"	13'-10"	17'-1"	14'-11"	12'-7"	15'-11"	13'-10"	11'-8"	14'-11"	13'-1"	11'-0"	14'-2"	12'-5"	10'-6"	13'-7"	11'-10"	10'-0"
	16		27'-7"	21'-11"	19'-2"	17'-1"	14'-11"	12'-7"	15'-7"	13'-7"	11'-5"	14'-5"	12'-7"	10'-8"	13'-7"	11'-10"	10'-0"	12'-11"	11'-3"	9'-6"	12'-4"	10'-9"	9'-1"
	24		24'-1"	19'-2"	16'-9"	14'-11"	13'-1"	11'-0"	13'-7"	11'-10"	10'-0"	12'-7"	11'-0"	9'-3"	11'-10"	10'-4"	8'-9"	11'-3"	9'-10"	8'-4"	10'-9"	9'-5"	7'-11"
362S162-97	12	50	33'-6"	26'-7"	23'-3"	20'-9"	18'-2"	15'-4"	18'-11"	16'-6"	13'-11"	17'-6"	15'-4"	12'-11"	16'-6"	14'-5"	12'-2"	15'-8"	13'-8"	11'-7"	15'-0"	13'-1"	11'-0"
	16		30'-5"	24'-2"	21'-1"	18'-11"	16'-6"	13'-11"	17'-2"	15'-0"	12'-8"	15'-11"	13'-11"	11'-9"	15'-0"	13'-1"	11'-0"	14'-3"	12'-5"	10'-6"	13'-7"	11'-11"	10'-0"
	24		26'-7"	21'-1"	18'-5"	16'-6"	14'-5"	12'-2"	15'-0"	13'-1"	11'-0"	13'-11"	12'-2"	10'-3"	13'-1"	11'-5"	9'-8"	12'-5"	10'-10"	9'-2"	11'-11"	10'-5"	8'-9"
362S200-33	12	33	25'-8"	20'-5"	17'-10"	15'-11"	13'-11"	11'-9"	14'-1"e	12'-8"	10'-8"	12'-7"e	11'-9"e	9'-11"	11'-6"e	11'-0"e	9'-4"e	10'-8"e	10'-6"e	8'-10"e	10'-0"e	10'-0"e	8'-6"e
	16		23'-4"	18'-6"	16'-2"	14'-1"e	12'-8"	10'-8"	12'-2"e	11'-6"e	9'-8"e	10'-11"e	10'-8"e	9'-0"e	10'-0"e	10'-0"e	8'-6"e	9'-3"e	9'-3"e	8'-0"e	8'-8"e	8'-8"e	7'-8"e
	24		19'-11"	16'-2"	14'-2"	11'-6"e	11'-0"e	9'-4"e	10'-0"e	10'-0"e	8'-6"e	8'-11"e	8'-11"e	7'-10"e	8'-2"e	8'-2"e	7'-5"e	7'-6"e	7'-6"e	7'-0"e	7'-1"e	7'-1"e	6'-9"e
362S200-43	12	33	28'-0"	22'-3"	19'-5"	17'-4"	15'-2"	12'-9"	15'-9"	13'-9"	11'-7"	14'-8"	12'-9"	10'-9"	13'-9"	12'-0"	10'-2"	12'-10"	11'-5"	9'-8"	12'-0"	10'-11"	9'-3"
	16		25'-5"	20'-2"	17'-8"	15'-9"	13'-9"	11'-7"	14'-4"	12'-6"	10'-7"	13'-2"	11'-7"	9'-10"	12'-0"	10'-11"	9'-3"	11'-1"e	10'-5"	8'-9"	10'-5"e	9'-11"e	8'-4"
	24		22'-3"	17'-8"	15'-5"	13'-9"	12'-0"	10'-2"	12'-0"	10'-11"	9'-3"	10'-9"e	10'-2"	8'-7"	9'-9"e	9'-7"e	8'-1"	9'-1"e	9'-1"e	7'-8"e	8'-6"e	8'-6"e	7'-4"e
362S200-54	12	33	30'-0"	23'-10"	20'-10"	18'-7"	16'-3"	13'-8"	16'-11"	14'-9"	12'-5"	15'-8"	13'-8"	11'-7"	14'-9"	12'-11"	10'-11"	14'-0"	12'-3"	10'-4"	13'-5"	11'-9"	9'-11"
	16		27'-3"	21'-8"	18'-11"	16'-11"	14'-9"	12'-5"	15'-4"	13'-5"	11'-4"	14'-3"	12'-5"	10'-6"	13'-5"	11'-9"	9'-11"	12'-9"	11'-2"	9'-5"	12'-2"	10'-8"	9'-0"
	24		23'-10"	18'-11"	16'-6"	14'-9"	12'-11"	10'-11"	13'-5"	11'-9"	9'-11"	12'-5"	10'-11"	9'-2"	11'-7"	10'-3"	8'-8"	10'-9"	9'-9"	8'-2"	10'-1"	9'-4"	7'-10"
362S200-54	12	50	30'-0"	23'-10"	20'-10"	18'-7"	16'-3"	13'-8"	16'-11"	14'-9"	12'-5"	15'-8"	13'-8"	11'-7"	14'-9"	12'-11"	10'-11"	14'-0"	12'-3"	10'-4"	13'-5"	11'-9"	9'-11"
	16		27'-3"	21'-8"	18'-11"	16'-11"	14'-9"	12'-5"	15'-4"	13'-5"	11'-4"	14'-3"	12'-5"	10'-6"	13'-5"	11'-9"	9'-11"	12'-9"	11'-2"	9'-5"	12'-2"	10'-8"	9'-0"
	24		23'-10"	18'-11"	16'-6"	14'-9"	12'-11"	10'-11"	13'-5"	11'-9"	9'-11"	12'-5"	10'-11"	9'-2"	11'-9"	10'-3"	8'-8"	11'-2"	9'-9"	8'-2"	10'-8"	9'-4"	7'-10"
362S200-68	12	50	32'-2"	25'-6"	22'-3"	19'-11"	17'-5"	14'-8"	18'-1"	15'-10"	13'-4"	16'-10"	14'-8"	12'-5"	15'-10"	13'-10"	11'-8"	15'-0"	13'-1"	11'-1"	14'-4"	12'-7"	10'-7"
	16		29'-2"	23'-2"	20'-3"	18'-1"	15'-10"	13'-4"	16'-5"	14'-4"	12'-1"	15'-3"	13'-4"	11'-3"	14'-4"	12'-7"	10'-7"	13'-8"	11'-11"	10'-1"	13'-1"	11'-5"	9'-7"
	24		25'-6"	20'-3"	17'-8"	15'-10"	13'-10"	11'-8"	14'-4"	12'-7"	10'-7"	13'-4"	11'-8"	9'-10"	12'-7"	11'-0"	9'-3"	11'-11"	10'-5"	8'-9"	11'-5"	10'-0"	8'-5"

See Curtain Wall Limiting Heights Table Notes

Wall Height

Stud Member	Spacing, in, oc	Fy, ksi	5 psf			15 psf			20 psf			25 psf			30 psf			35 psf			40 psf		
			L/120	L/240	L/360	L/240	L/360	L/600	L/240	L/360	L/600	L/240	L/360	L/600	L/240	L/360	L/600	L/240	L/360	L/600	L/240	L/360	L/600
362S200-97	12	50	35'-7"	28'-3"	24'-8"	22'-0"	19'-3"	16'-3"	20'-0"	17'-6"	14'-9"	18'-7"	16'-3"	13'-8"	17'-6"	15'-3"	12'-11"	16'-7"	14'-6"	12'-3"	15'-11"	13'-11"	11'-8"
	16		32'-4"	25'-8"	22'-5"	20'-0"	17'-6"	14'-9"	18'-2"	15'-11"	13'-5"	16'-11"	14'-9"	12'-5"	15'-11"	13'-11"	11'-8"	15'-1"	13'-2"	11'-1"	14'-5"	12'-7"	10'-8"
	24		28'-3"	22'-5"	19'-7"	17'-6"	15'-3"	12'-11"	15'-11"	13'-11"	11'-8"	14'-9"	12'-11"	10'-10"	13'-11"	12'-2"	10'-3"	13'-2"	11'-6"	9'-9"	12'-7"	11'-0"	9'-4"
362S250-43	12	33	29'-6"	23'-5"	20'-6"	18'-4"	16'-0"	13'-6"	16'-7"	14'-6"	12'-3"	15'-5"	13'-6"	11'-4"	14'-2"	12'-8"	10'-8"	13'-2"	12'-1"	10'-2"	12'-4"	11'-6"	9'-9"
	16		26'-10"	21'-3"	18'-7"	16'-7"	14'-6"	12'-3"	15'-1"	13'-2"	11'-2"	13'-6"	12'-3"	10'-4"	12'-4"	11'-6"	9'-9"	11'-5"e	10'-11"e	9'-3"	10'-8"e	10'-6"e	8'-10"
	24		23'-5"	18'-7"	16'-3"	14'-2"	12'-8"	10'-8"	12'-4"	11'-6"	9'-9"	11'-0"e	10'-8"e	9'-0"	10'-0"e	10'-0"e	8'-6"	9'-4"e	9'-4"e	8'-1"e	8'-8"e	8'-8"e	7'-9"e
362S250-54	12	33	31'-8"	25'-2"	21'-11"	19'-7"	17'-2"	14'-6"	17'-10"	15'-7"	13'-2"	16'-7"	14'-6"	12'-2"	15'-7"	13'-7"	11'-6"	14'-10"	12'-11"	10'-11"	13'-11"	12'-4"	10'-5"
	16		28'-9"	22'-10"	19'-11"	17'-10"	15'-7"	13'-2"	16'-2"	14'-2"	11'-11"	15'-0"	13'-2"	11'-1"	13'-11"	12'-4"	10'-5"	12'-11"	11'-9"	9'-11"	12'-1"	11'-3"	9'-6"
	24		25'-2"	19'-11"	17'-5"	15'-7"	13'-7"	11'-6"	13'-11"	12'-4"	10'-5"	12'-6"	11'-6"	9'-8"	11'-5"	10'-10"	9'-1"	10'-7"	10'-3"	8'-8"	9'-10"	9'-10"	8'-3"
362S250-54	12	50	31'-7"	25'-1"	21'-11"	19'-7"	17'-1"	14'-5"	17'-10"	15'-7"	13'-1"	16'-6"	14'-5"	12'-2"	15'-7"	13'-7"	11'-5"	14'-9"	12'-11"	10'-11"	14'-2"	12'-4"	10'-5"
	16		28'-9"	22'-10"	19'-11"	17'-10"	15'-7"	13'-1"	16'-2"	14'-2"	11'-11"	15'-0"	13'-1"	11'-1"	14'-2"	12'-4"	10'-5"	13'-5"	11'-9"	9'-11"	12'-10"	11'-3"	9'-5"
	24		25'-1"	19'-11"	17'-5"	15'-7"	13'-7"	11'-5"	14'-2"	12'-4"	10'-5"	13'-1"	11'-5"	9'-8"	12'-4"	10'-9"	9'-1"	11'-9"	10'-3"	8'-8"	11'-3"	9'-10"	8'-3"
362S250-68	12	50	33'-11"	26'-11"	23'-6"	21'-0"	18'-5"	15'-6"	19'-1"	16'-8"	14'-1"	17'-9"	15'-6"	13'-1"	16'-8"	14'-7"	12'-4"	15'-10"	13'-10"	11'-8"	15'-2"	13'-3"	11'-2"
	16		30'-10"	24'-6"	21'-5"	19'-1"	16'-8"	14'-1"	17'-4"	15'-2"	12'-10"	16'-1"	14'-1"	11'-11"	15'-2"	13'-3"	11'-2"	14'-5"	12'-7"	10'-7"	13'-9"	12'-0"	10'-2"
	24		26'-11"	21'-5"	18'-8"	16'-8"	14'-7"	12'-4"	15'-2"	13'-3"	11'-2"	14'-1"	12'-4"	10'-5"	13'-3"	11'-7"	9'-9"	12'-7"	11'-0"	9'-3"	12'-0"	10'-6"	8'-10"
362S250-97	12	50	37'-7"	29'-10"	26'-1"	23'-4"	20'-4"	17'-2"	21'-2"	18'-6"	15'-7"	19'-8"	17'-2"	14'-6"	18'-6"	16'-2"	13'-8"	17'-7"	15'-4"	12'-11"	16'-10"	14'-8"	12'-5"
	16		34'-2"	27'-1"	23'-8"	21'-2"	18'-6"	15'-7"	19'-3"	16'-10"	14'-2"	17'-10"	15'-7"	13'-2"	16'-10"	14'-8"	12'-5"	16'-0"	13'-11"	11'-9"	15'-3"	13'-4"	11'-3"
	24		29'-10"	23'-8"	20'-8"	18'-6"	16'-2"	13'-8"	16'-10"	14'-8"	12'-5"	15'-7"	13'-8"	11'-6"	14'-8"	12'-10"	10'-10"	13'-11"	12'-2"	10'-3"	13'-4"	11'-8"	9'-10"
362S300-54	12	33	33'-1"	26'-3"	22'-11"	20'-6"	17'-11"	15'-1"	18'-8"	16'-3"	13'-9"	17'-4"	15'-1"	12'-9"	16'-3"	14'-3"	12'-0"	15'-3"	13'-6"	11'-5"	14'-3"	12'-11"	10'-11"
	16		30'-1"	23'-10"	20'-10"	18'-8"	16'-3"	13'-9"	16'-11"	14'-10"	12'-6"	15'-7"	13'-9"	11'-7"	14'-3"	12'-11"	10'-11"	13'-2"	12'-3"	10'-4"	12'-4"	11'-9"	9'-11"
	24		26'-3"	20'-10"	18'-3"	16'-3"	14'-3"	12'-0"	14'-3"	12'-11"	10'-11"	12'-9"	12'-0"	10'-1"	11'-8"	11'-3"	9'-6"	10'-9"	10'-9"	9'-1"	10'-1"	10'-1"	8'-8"
362S300-54	12	50	32'-6"	25'-10"	22'-7"	20'-2"	17'-7"	14'-10"	18'-4"	16'-0"	13'-6"	17'-0"	14'-10"	12'-6"	16'-0"	14'-0"	11'-9"	15'-2"	13'-3"	11'-2"	14'-6"	12'-8"	10'-8"
	16		29'-6"	23'-5"	20'-6"	18'-4"	16'-0"	13'-6"	16'-8"	14'-6"	12'-3"	15'-5"	13'-6"	11'-5"	14'-6"	12'-8"	10'-8"	13'-10"	12'-1"	10'-2"	13'-2"	11'-6"	9'-9"
	24		25'-10"	20'-6"	17'-11"	16'-0"	14'-0"	11'-9"	14'-6"	12'-8"	10'-8"	13'-6"	11'-9"	9'-11"	12'-8"	11'-1"	9'-4"	12'-1"	10'-6"	8'-11"	11'-6"	10'-1"	8'-6"
362S300-68	12	50	35'-4"	28'-1"	24'-6"	21'-11"	19'-2"	16'-2"	19'-11"	17'-5"	14'-8"	18'-6"	16'-2"	13'-7"	17'-5"	15'-2"	12'-10"	16'-6"	14'-5"	12'-2"	15'-10"	13'-10"	11'-8"
	16		32'-1"	25'-6"	22'-3"	19'-11"	17'-5"	14'-8"	18'-1"	15'-10"	13'-4"	16'-9"	14'-8"	12'-4"	15'-10"	13'-10"	11'-8"	15'-0"	13'-1"	11'-1"	14'-4"	12'-6"	10'-7"
	24		28'-1"	22'-3"	19'-5"	17'-5"	15'-2"	12'-10"	15'-10"	13'-10"	11'-8"	14'-8"	12'-10"	10'-10"	13'-10"	12'-1"	10'-2"	13'-1"	11'-5"	9'-8"	12'-6"	10'-11"	9'-3"
362S300-97	12	50	39'-4"	31'-3"	27'-3"	24'-5"	21'-4"	18'-0"	22'-2"	19'-4"	16'-4"	20'-7"	18'-0"	15'-2"	19'-4"	16'-11"	14'-3"	18'-5"	16'-1"	13'-7"	17'-7"	15'-4"	13'-0"
	16		35'-9"	28'-5"	24'-10"	22'-2"	19'-4"	16'-4"	20'-2"	17'-7"	14'-10"	18'-8"	16'-4"	13'-9"	17'-7"	15'-4"	13'-0"	16'-9"	14'-7"	12'-4"	16'-0"	14'-0"	11'-9"
	24		31'-3"	24'-10"	21'-8"	19'-4"	16'-11"	14'-3"	17'-7"	15'-4"	13'-0"	16'-4"	14'-3"	12'-0"	15'-4"	13'-5"	11'-4"	14'-7"	12'-9"	10'-9"	14'-0"	12'-2"	10'-3"
400S137-33	12	33	25'-1"	19'-11"	17'-5"	15'-4"	13'-7"	11'-6"	13'-4"e	12'-4"e	10'-5"	11'-11"e	11'-6"e	9'-8"	10'-10"e	10'-9"e	9'-1"e	10'-1"e	10'-1"e	8'-8"e	9'-5"e	9'-5"e	8'-3"e
	16		22'-10"	18'-1"	15'-10"	13'-4"e	12'-4"e	10'-5"	11'-6"e	11'-3"e	9'-6"e	10'-4"e	10'-4"e	8'-9"e	9'-5"e	9'-5"e	8'-3"e	8'-9"e	8'-9"e	7'-10"e	8'-2"e	8'-2"e	7'-6"e
	24		18'-10"	15'-10"	13'-10"	10'-10"e	10'-9"e	9'-1"e	9'-5"e	9'-5"e	8'-3"e	8'-5"e	8'-5"e	7'-8"e	7'-8"e	7'-8"e	7'-3"e	7'-1"e	7'-1"e	6'-10"e	6'-8"e	6'-8"e	6'-7"e
400S137-43	12	33	27'-4"	21'-8"	18'-11"	16'-11"	14'-9"	12'-6"	15'-5"	13'-5"	11'-4"	14'-0"	12'-6"	10'-6"	12'-9"	11'-9"	9'-11"	11'-10"	11'-2"	9'-5"	11'-1"	10'-8"	9'-0"
	16		24'-10"	19'-8"	17'-2"	15'-5"	13'-5"	11'-4"	13'-6"	12'-2"	10'-4"	12'-1"	11'-4"	9'-7"	11'-1"	10'-8"	9'-0"	10'-3"	10'-2"	8'-6"	9'-7"e	9'-7"e	8'-2"
	24		21'-8"	17'-2"	15'-0"	12'-9"	11'-9"	9'-11"	11'-1"	10'-8"	9'-0"	9'-11"	9'-11"	8'-4"	9'-0"e	9'-0"e	7'-10"	8'-4"e	8'-4"e	7'-6"e	7'-10"e	7'-10"e	7'-2"e
400S137-54	12	33	29'-3"	23'-3"	20'-3"	18'-1"	15'-10"	13'-4"	16'-6"	14'-5"	12'-2"	15'-3"	13'-4"	11'-3"	14'-4"	12'-7"	10'-7"	13'-3"	11'-11"	10'-1"	12'-5"	11'-5"	9'-8"
	16		26'-7"	21'-1"	18'-5"	16'-6"	14'-5"	12'-2"	15'-0"	13'-1"	11'-0"	13'-7"	12'-2"	10'-3"	12'-5"	11'-5"	9'-8"	11'-6"	10'-10"	9'-2"	10'-9"	10'-4"	8'-9"
	24		23'-3"	18'-5"	16'-1"	14'-4"	12'-7"	10'-7"	12'-5"	11'-5"	9'-8"	11'-1"	10'-7"	8'-11"	10'-1"	10'-0"	8'-5"	9'-4"	9'-4"	8'-0"	8'-9"	8'-9"	7'-8"
400S137-54	12	50	29'-3"	23'-3"	20'-3"	18'-1"	15'-10"	13'-4"	16'-6"	14'-5"	12'-2"	15'-3"	13'-4"	11'-3"	14'-5"	12'-7"	10'-7"	13'-8"	11'-11"	10'-1"	13'-1"	11'-5"	9'-8"
	16		26'-7"	21'-1"	18'-5"	16'-6"	14'-5"	12'-2"	15'-0"	13'-1"	11'-0"	13'-11"	12'-2"	10'-3"	13'-1"	11'-5"	9'-8"	12'-5"	10'-10"	9'-2"	11'-10"	10'-4"	8'-9"
	24		23'-3"	18'-5"	16'-1"	14'-5"	12'-7"	10'-7"	13'-1"	11'-5"	9'-8"	12'-2"	10'-7"	8'-11"	11'-5"	10'-0"	8'-5"	10'-10"	9'-6"	8'-0"	10'-4"	9'-1"	7'-8"
400S137-68	12	50	31'-3"	24'-10"	21'-8"	19'-5"	16'-11"	14'-3"	17'-7"	15'-5"	13'-0"	16'-4"	14'-3"	12'-1"	15'-5"	13'-5"	11'-4"	14'-7"	12'-9"	10'-9"	14'-0"	12'-2"	10'-4"
	16		28'-5"	22'-7"	19'-8"	17'-7"	15'-5"	13'-0"	16'-0"	14'-0"	11'-9"	14'-10"	13'-0"	10'-11"	14'-0"	12'-2"	10'-4"	13'-3"	11'-7"	9'-9"	12'-8"	11'-1"	9'-4"
	24		24'-10"	19'-8"	17'-2"	15'-5"	13'-5"	11'-4"	14'-0"	12'-2"	10'-4"	13'-0"	11'-4"	9'-7"	12'-2"	10'-8"	9'-0"	11'-7"	10'-2"	8'-7"	11'-1"	9'-8"	8'-2"
400S162-33	12	33	26'-3"	20'-10"	18'-3"	16'-3"	14'-3"	12'-0"	14'-3"e	12'-11"e	10'-11"	12'-9"e	12'-0"e	10'-1"e	11'-8"e	11'-4"e	9'-6"e	10'-9"e	10'-9"e	9'-1"e	10'-1"e	10'-1"e	8'-8"e
	16		23'-11"	18'-11"	16'-7"	14'-3"e	12'-11"e	10'-11"	12'-4"e	11'-9"e	9'-11"e	11'-1"e	10'-11"e	9'-2"e	10'-1"e	10'-1"e	8'-8"e	9'-4"e	9'-4"e	8'-3"e	8'-9"e	8'-9"e	7'-10"e
	24		20'-2"	16'-7"	14'-6"	11'-8"e	11'-4"e	9'-6"e	10'-1"e	10'-1"e	8'-8"e	9'-0"e	9'-0"e	8'-0"e	8'-3"e	8'-3"e	7'-7"e	7'-8"e	7'-8"e	7'-2"e	7'-2"e	7'-2"e	6'-10"e
400S162-43	12	33	28'-7"	22'-8"	19'-10"	17'-9"	15'-6"	13'-1"	16'-1"	14'-1"	11'-10"	14'-11"	13'-1"	11'-0"	13'-9"	12'-3"	10'-4"	12'-8"	11'-8"	9'-10"	11'-11"	11'-2"	9'-5"
	16		26'-0"	20'-7"	18'-0"	16'-1"	14'-1"	11'-10"	14'-7"	12'-9"	10'-9"	13'-0"	11'-10"	10'-0"	11'-11"	11'-2"	9'-5"	11'-0"e	10'-7"	8'-11"	10'-3"e	10'-2"e	8'-7"
	24		22'-8"	18'-0"	15'-9"	13'-9"	12'-3"	10'-4"	11'-11"	11'-2"	9'-5"	10'-8"e	10'-4"e	8'-9"	9'-8"e	9'-8"e	8'-3"	9'-0"e	9'-0"e	7'-10"e	8'-5"e	8'-5"e	7'-6"e
400S162-54	12	33	30'-8"	24'-4"	21'-3"	19'-0"	16'-7"	14'-0"	17'-3"	15'-1"	12'-9"	16'-0"	14'-0"	11'-10"	15'-1"	13'-2"	11'-1"	14'-3"	12'-6"	10'-7"	13'-4"	12'-0"	10'-1"
	16		27'-10"	22'-1"	19'-4"	17'-3"	15'-1"	12'-9"	15'-8"	13'-8"	11'-7"	14'-7"	12'-9"	10'-9"	13'-4"	12'-0"	10'-1"	12'-4"	11'-4"	9'-7"	11'-6"	10'-10"	9'-2"
	24		24'-4"	19'-4"	16'-10"	15'-1"	13'-2"	11'-1"	13'-4"	12'-0"	10'-1"	11'-11"	11'-1"	9'-4"	10'-10"	10'-5"	8'-10"	10'-1"	9'-11"	8'-5"	9'-5"	9'-5"	8'-0"
400S162-54	12	50	30'-8"	24'-4"	21'-3"	19'-0"	16'-7"	14'-0"	17'-3"	15'-1"	12'-9"	16'-0"	14'-0"	11'-10"	15'-1"	13'-2"	11'-1"	14'-4"	12'-6"	10'-7"	13'-8"	12'-0"	10'-1"
	16		27'-10"	22'-1"	19'-4"	17'-3"	15'-1"	12'-9"	15'-8"	13'-8"	11'-7"	14'-7"	12'-9"	10'-9"	13'-8"	12'-0"	10'-1"	13'-0"	11'-4"	9'-7"	12'-5"	10'-10"	9'-2"
	24		24'-4"	19'-4"	16'-10"	15'-1"	13'-2"	11'-1"	13'-8"	12'-0"	10'-1"	12'-9"	11'-1"	9'-4"	12'-0"	10'-5"	8'-10"	11'-4"	9'-11"	8'-5"	10'-10"	9'-6"	8'-0"

See Curtain Wall Limiting Heights Table Notes

Wall Height

Stud Member	Spacing, in, oc	Fy, ksi	5 psf			15 psf			20 psf			25 psf			30 psf			35 psf			40 psf		
			L/120	L/240	L/360	L/240	L/360	L/600	L/240	L/360	L/600	L/240	L/360	L/600	L/240	L/360	L/600	L/240	L/360	L/600	L/240	L/360	L/600
400S162-68	12	50	32'-10"	26'-0"	22'-9"	20'-4"	17'-9"	15'-0"	18'-6"	16'-2"	13'-7"	17'-2"	15'-0"	12'-8"	16'-2"	14'-1"	11'-11"	15'-4"	13'-5"	11'-4"	14'-8"	12'-10"	10'-10"
	16		29'-10"	23'-8"	20'-8"	18'-6"	16'-2"	13'-7"	16'-9"	14'-8"	12'-4"	15'-7"	13'-7"	11'-6"	14'-8"	12'-10"	10'-10"	13'-11"	12'-2"	10'-3"	13'-4"	11'-8"	9'-10"
	24		26'-0"	20'-8"	18'-1"	16'-2"	14'-1"	11'-11"	14'-8"	12'-10"	10'-10"	13'-7"	11'-11"	10'-0"	12'-10"	11'-2"	9'-5"	12'-2"	10'-8"	9'-0"	11'-8"	10'-2"	8'-7"
400S162-97	12	50	36'-3"	28'-9"	25'-2"	22'-6"	19'-7"	16'-7"	20'-5"	17'-10"	15'-0"	18'-11"	16'-7"	13'-11"	17'-10"	15'-7"	13'-2"	16'-11"	14'-10"	12'-6"	16'-2"	14'-2"	11'-11"
	16		32'-11"	26'-2"	22'-10"	20'-5"	17'-10"	15'-0"	18'-6"	16'-2"	13'-8"	17'-3"	15'-0"	12'-8"	16'-2"	14'-2"	11'-11"	15'-5"	13'-5"	11'-4"	14'-9"	12'-10"	10'-10"
	24		28'-9"	22'-10"	19'-11"	17'-10"	15'-7"	13'-2"	16'-2"	14'-2"	11'-11"	15'-0"	13'-2"	11'-1"	14'-2"	12'-4"	10'-5"	13'-5"	11'-9"	9'-11"	12'-10"	11'-3"	9'-6"
400S200-33	12	33	27'-8"	22'-0"	19'-2"	17'-2"e	15'-0"	12'-8"	14'-11"e	13'-8"e	11'-6"	13'-4"e	12'-8"e	10'-8"e	12'-2"e	11'-11"e	10'-0"e	11'-3"e	11'-3"e	9'-6"e	10'-7"e	10'-7"e	9'-1"e
	16		25'-2"	20'-0"	17'-5"	14'-11"e	13'-8"e	11'-6"	12'-11"e	12'-5"e	10'-5"e	11'-7"e	11'-6"e	9'-8"e	10'-7"e	10'-7"e	9'-1"e	9'-9"e	9'-9"e	8'-8"e	9'-2"e	9'-2"e	8'-3"e
	24		21'-1"	17'-5"	15'-3"	12'-2"e	11'-11"e	10'-0"e	10'-7"e	10'-7"e	9'-1"e	9'-5"e	9'-5"e	8'-6"e	8'-7"e	8'-7"e	8'-0"e	8'-0"e	8'-0"e	7'-7"e	7'-6"e	7'-6"e	7'-3"e
400S200-43	12	33	30'-2"	23'-11"	20'-11"	18'-8"	16'-4"	13'-9"	17'-0"	14'-10"	12'-6"	15'-9"	13'-9"	11'-7"	14'-8"	13'-0"	10'-11"	13'-7"	12'-4"	10'-5"	12'-9"e	11'-9"	9'-11"
	16		27'-5"	21'-9"	19'-0"	17'-0"	14'-10"	12'-6"	15'-5"	13'-6"	11'-4"	13'-11"	12'-6"	10'-7"	12'-9"e	11'-9"	9'-11"	11'-9"e	11'-2"e	9'-5"	11'-0"e	10'-8"e	9'-0"
	24		23'-11"	19'-0"	16'-7"	14'-8"	13'-0"	10'-11"	12'-9"e	11'-9"	9'-11"	11'-5"e	10'-11"e	9'-3"	10'-5"e	10'-4"e	8'-8"e	9'-7"e	9'-7"e	8'-3"e	9'-0"e	9'-0"e	7'-11"e
400S200-54	12	33	32'-4"	25'-8"	22'-5"	20'-1"	17'-6"	14'-9"	18'-3"	15'-11"	13'-5"	16'-11"	14'-9"	12'-6"	15'-11"	13'-11"	11'-9"	15'-1"	13'-3"	11'-2"	14'-5"	12'-8"	10'-8"
	16		29'-5"	23'-4"	20'-5"	18'-3"	15'-11"	13'-5"	16'-7"	14'-6"	12'-2"	15'-4"	13'-5"	11'-4"	14'-5"	12'-8"	10'-8"	13'-5"	12'-0"	10'-1"	12'-6"	11'-6"	9'-8"
	24		25'-8"	20'-5"	17'-10"	15'-11"	13'-11"	11'-9"	14'-5"	12'-8"	10'-8"	12'-11"	11'-9"	9'-11"	11'-10"	11'-0"	9'-4"	10'-11"	10'-6"	8'-10"	10'-3"	10'-0"	8'-5"
400S200-54	12	50	32'-4"	25'-8"	22'-5"	20'-1"	17'-6"	14'-9"	18'-3"	15'-11"	13'-5"	16'-11"	14'-9"	12'-6"	15'-11"	13'-11"	11'-9"	15'-1"	13'-3"	11'-2"	14'-6"	12'-8"	10'-8"
	16		29'-5"	23'-4"	20'-5"	18'-3"	15'-11"	13'-5"	16'-7"	14'-6"	12'-2"	15'-4"	13'-5"	11'-4"	14'-6"	12'-8"	10'-8"	13'-9"	12'-0"	10'-1"	13'-2"	11'-6"	9'-8"
	24		25'-8"	20'-5"	17'-10"	15'-11"	13'-11"	11'-9"	14'-6"	12'-8"	10'-8"	13'-5"	11'-9"	9'-11"	12'-8"	11'-0"	9'-4"	12'-0"	10'-6"	8'-10"	11'-6"	10'-0"	8'-5"
400S200-68	12	50	34'-8"	27'-6"	24'-1"	21'-6"	18'-9"	15'-10"	19'-6"	17'-1"	14'-5"	18'-2"	15'-10"	13'-4"	17'-1"	14'-11"	12'-7"	16'-2"	14'-2"	11'-11"	15'-6"	13'-6"	11'-5"
	16		31'-6"	25'-0"	21'-10"	19'-6"	17'-1"	14'-5"	17'-9"	15'-6"	13'-1"	16'-6"	14'-5"	12'-2"	15'-6"	13'-6"	11'-5"	14'-9"	12'-10"	10'-10"	14'-1"	12'-4"	10'-4"
	24		27'-6"	21'-10"	19'-1"	17'-1"	14'-11"	12'-7"	15'-6"	13'-6"	11'-5"	14'-5"	12'-7"	10'-7"	13'-6"	11'-10"	10'-0"	12'-10"	11'-3"	9'-6"	12'-4"	10'-9"	9'-1"
400S200-97	12	50	38'-5"	30'-6"	26'-7"	23'-9"	20'-9"	17'-6"	21'-7"	18'-11"	15'-11"	20'-1"	17'-6"	14'-9"	18'-11"	16'-6"	13'-11"	17'-11"	15'-8"	13'-3"	17'-2"	15'-0"	12'-8"
	16		34'-11"	27'-8"	24'-2"	21'-7"	18'-11"	15'-11"	19'-8"	17'-2"	14'-6"	18'-3"	15'-11"	13'-5"	17'-2"	15'-0"	12'-8"	16'-4"	14'-3"	12'-0"	15'-7"	13'-7"	11'-6"
	24		30'-6"	24'-2"	21'-1"	18'-11"	16'-6"	13'-11"	17'-2"	15'-0"	12'-8"	15'-11"	13'-11"	11'-9"	15'-0"	13'-1"	11'-1"	14'-3"	12'-5"	10'-6"	13'-7"	11'-11"	10'-0"
400S250-43	12	33	31'-9"	25'-3"	22'-0"	19'-8"	17'-2"	14'-6"	17'-11"	15'-8"	13'-2"	16'-6"	14'-6"	12'-3"	15'-1"	13'-8"	11'-6"	13'-11"	13'-0"	10'-11"	13'-0"e	12'-5"e	10'-6"
	16		28'-10"	22'-11"	20'-0"	17'-11"	15'-8"	13'-2"	16'-0"	14'-2"	12'-0"	14'-3"	13'-2"	11'-1"	13'-0"e	12'-5"e	10'-6"	12'-1"e	11'-9"e	9'-11"	11'-3"e	11'-3"e	9'-6"e
	24		25'-3"	20'-0"	17'-6"	15'-1"	13'-8"	11'-6"	13'-0"e	12'-5"e	10'-6"	11'-8"e	11'-6"e	9'-9"	10'-8"e	10'-8"e	9'-2"e	9'-10"e	9'-10"e	8'-8"e	9'-3"e	9'-3"e	8'-4"e
400S250-54	12	33	34'-1"	27'-1"	23'-8"	21'-2"	18'-6"	15'-7"	19'-2"	16'-9"	14'-2"	17'-10"	15'-7"	13'-2"	16'-9"	14'-8"	12'-4"	15'-10"	13'-11"	11'-9"	14'-10"	13'-4"	11'-3"
	16		31'-0"	24'-7"	21'-6"	19'-2"	16'-9"	14'-2"	17'-5"	15'-3"	12'-10"	16'-2"	14'-2"	11'-11"	14'-10"	13'-4"	11'-3"	13'-9"	12'-8"	10'-8"	12'-10"	12'-1"	10'-2"
	24		27'-1"	21'-6"	18'-9"	16'-9"	14'-8"	12'-4"	14'-10"	13'-4"	11'-3"	13'-3"	12'-4"	10'-5"	12'-1"	11'-8"	9'-10"	11'-3"	11'-1"	9'-4"	10'-6"e	10'-6"e	8'-11"
400S250-54	12	50	34'-1"	27'-0"	23'-7"	21'-1"	18'-5"	15'-7"	19'-2"	16'-9"	14'-1"	17'-10"	15'-7"	13'-1"	16'-9"	14'-8"	12'-4"	15'-11"	13'-11"	11'-9"	15'-3"	13'-4"	11'-3"
	16		30'-11"	24'-7"	21'-5"	19'-2"	16'-9"	14'-1"	17'-5"	15'-3"	12'-10"	16'-2"	14'-1"	11'-11"	15'-3"	13'-4"	11'-3"	14'-5"	12'-8"	10'-8"	13'-10"	12'-1"	10'-2"
	24		27'-0"	21'-5"	18'-9"	16'-9"	14'-8"	12'-4"	15'-3"	13'-4"	11'-3"	14'-1"	12'-4"	10'-5"	13'-4"	11'-7"	9'-10"	12'-8"	11'-0"	9'-4"	12'-1"	10'-7"	8'-11"
400S250-68	12	50	36'-7"	29'-0"	25'-4"	22'-8"	19'-10"	16'-8"	20'-7"	18'-0"	15'-2"	19'-1"	16'-8"	14'-1"	18'-0"	15'-9"	13'-3"	17'-1"	14'-11"	12'-7"	16'-4"	14'-3"	12'-1"
	16		33'-3"	26'-4"	23'-0"	20'-7"	18'-0"	15'-2"	18'-9"	16'-4"	13'-9"	17'-4"	15'-2"	12'-10"	16'-4"	14'-3"	12'-1"	15'-6"	13'-7"	11'-5"	14'-10"	13'-0"	10'-11"
	24		29'-0"	23'-0"	20'-2"	18'-0"	15'-9"	13'-3"	16'-4"	14'-3"	12'-1"	15'-2"	13'-3"	11'-2"	14'-3"	12'-6"	10'-6"	13'-7"	11'-10"	10'-0"	13'-0"	11'-4"	9'-7"
400S250-97	12	50	40'-7"	32'-2"	28'-1"	25'-2"e	21'-11"e	18'-6"e	22'-10"e	19'-11"e	16'-10"e	21'-2"e	18'-6"e	15'-7"e	19'-11"e	17'-5"e	14'-8"e	18'-11"e	16'-7"e	14'-0"e	18'-2"e	15'-10"e	13'-4"e
	16		36'-10"e	29'-3"	25'-7"	22'-10"e	19'-11"e	16'-10"e	20'-9"e	18'-2"e	15'-3"e	19'-3"e	16'-10"e	14'-2"e	18'-2"e	15'-10"e	13'-4"e	17'-3"e	15'-0"e	12'-8"e	16'-6"e	14'-5"e	12'-2"e
	24		32'-2"e	25'-7"e	22'-4"	19'-11"e	17'-5"e	14'-8"e	18'-2"e	15'-10"e	13'-4"e	16'-10"e	14'-8"e	12'-5"e	15'-10"e	13'-10"e	11'-8"e	15'-0"e	13'-2"e	11'-1"e	14'-5"e	12'-7"e	10'-7"e
400S300-54	12	33	35'-7"	28'-3"	24'-8"	22'-1"	19'-3"	16'-3"	20'-1"	17'-6"	14'-9"	18'-7"	16'-3"	13'-9"	17'-6"	15'-4"	12'-11"	16'-2"	14'-6"	12'-3"	15'-2"	13'-11"	11'-9"
	16		32'-4"	25'-8"	22'-5"	20'-1"	17'-6"	14'-9"	18'-3"	15'-11"	13'-5"	16'-7"	14'-9"	12'-6"	15'-2"	13'-11"	11'-9"	14'-0"	13'-3"	11'-2"	13'-1"	12'-8"	10'-8"
	24		28'-3"	22'-5"	19'-7"	17'-6"	15'-4"	12'-11"	15'-2"	13'-11"	11'-9"	13'-6"	12'-11"	10'-11"	12'-4"	12'-2"	10'-3"	11'-5"	11'-5"	9'-9"	10'-8"e	10'-8"e	9'-4"
400S300-54	12	50	35'-0"	27'-9"	24'-3"	21'-8"	18'-11"	16'-0"	19'-8"	17'-3"	14'-6"	18'-3"	16'-0"	13'-6"	17'-3"	15'-0"	12'-8"	16'-4"	14'-3"	12'-1"	15'-8"	13'-8"	11'-6"
	16		31'-9"	25'-3"	22'-1"	19'-8"	17'-3"	14'-6"	17'-11"	15'-8"	13'-2"	16'-7"	14'-6"	12'-3"	15'-8"	13'-8"	11'-6"	14'-10"	13'-0"	10'-11"	14'-3"	12'-5"	10'-6"
	24		27'-9"	22'-1"	19'-3"	17'-3"	15'-0"	12'-8"	15'-8"	13'-8"	11'-6"	14'-6"	12'-8"	10'-8"	13'-8"	11'-11"	10'-1"	13'-0"	11'-4"	9'-7"	12'-4"	10'-10"	9'-2"
400S300-68	12	50	38'-0"	30'-2"	26'-4"	23'-7"	20'-7"	17'-4"	21'-5"	18'-9"	15'-9"	19'-11"	17'-4"	14'-8"	18'-9"	16'-4"	13'-9"	17'-9"	15'-6"	13'-1"	17'-0"	14'-10"	12'-6"
	16		34'-7"	27'-5"	24'-0"	21'-5"	18'-9"	15'-9"	19'-6"	17'-0"	14'-4"	18'-1"	15'-9"	13'-4"	17'-0"	14'-10"	12'-6"	16'-2"	14'-1"	11'-11"	15'-5"	13'-6"	11'-5"
	24		30'-2"	24'-0"	20'-11"	18'-9"	16'-4"	13'-9"	17'-0"	14'-10"	12'-6"	15'-9"	13'-9"	11'-8"	14'-10"	13'-0"	10'-11"	14'-1"	12'-4"	10'-5"	13'-6"	11'-9"	9'-11"
400S300-97	12	50	42'-5"	33'-8"	29'-5"	26'-3"	22'-11"	19'-4"	23'-10"	20'-10"	17'-7"	22'-2"	19'-4"	16'-4"	20'-10"	18'-3"	15'-4"	19'-10"	17'-4"	14'-7"	18'-11"	16'-7"	13'-11"
	16		38'-6"	30'-7"	26'-8"	23'-10"	20'-10"	17'-7"	21'-8"	18'-11"	16'-0"	20'-2"	17'-7"	14'-10"	18'-11"	16'-7"	13'-11"	18'-0"	15'-9"	13'-3"	17'-3"	15'-0"	12'-8"
	24		33'-8"	26'-8"	23'-4"	20'-10"	18'-3"	15'-4"	18'-11"	16'-7"	13'-11"	17'-7"	15'-4"	12'-11"	16'-7"	14'-5"	12'-2"	15'-9"	13'-9"	11'-7"	15'-0"	13'-2"	11'-1"
550S162-33	12	33	33'-8"	26'-9"	23'-4"	20'-11"e	18'-3"e	15'-5"e	18'-3"e	16'-7"e	14'-0"e	16'-4"e	15'-5"e	13'-0"e	14'-11"e	14'-6"e	12'-3"e	13'-10"e	13'-9"e	11'-7"e	12'-11"e	12'-11"e	11'-1"e
	16		30'-7"	24'-4"	21'-3"	18'-3"e	16'-7"e	14'-0"e	15'-10"e	15'-1"e	12'-8"e	14'-2"e	14'-0"e	11'-9"e	12'-11"e	12'-11"e	11'-1"e	12'-0"e	12'-0"e	10'-6"e	11'-2"e	11'-2"e	10'-1"e
	24		25'-10"e	21'-3"e	18'-7"	14'-11"e	14'-6"e	12'-3"e	12'-11"e	12'-11"e	11'-1"e	11'-7"e	11'-7"e	10'-4"e	10'-7"e	10'-7"e	9'-8"e	9'-9"e	9'-9"e	9'-2"e	9'-2"e	9'-2"e	8'-10"e
550S162-43	12	33	36'-8"	29'-1"	25'-5"	22'-9"	19'-10"	16'-9"	20'-8"	18'-1"	15'-3"	19'-2"e	16'-9"	14'-2"	17'-11"e	15'-9"e	13'-4"	16'-7"e	15'-0"e	12'-8"	15'-6"e	14'-4"e	12'-1"e
	16		33'-4"	26'-5"	23'-1"	20'-8"	18'-1"	15'-3"	18'-9"e	16'-5"	13'-10"	17'-0"e	15'-3"e	12'-10"	15'-6"e	14'-4"e	12'-1"e	14'-4"e	13'-7"e	11'-6"e	13'-5"e	13'-0"e	11'-0"e
	24		29'-1"	23'-1"	20'-2"	17'-11"e	15'-9"e	13'-4"	15'-6"e	14'-4"e	12'-1"e	13'-11"e	13'-4"e	11'-3"e	12'-8"e	12'-6"e	10'-7"e	11'-9"e	11'-9"e	10'-0"e	11'-0"e	11'-0"e	9'-7"e

See Curtain Wall Limiting Heights Table Notes

Wall Height

Stud Member	Spacing, in, oc	Fy, ksi	5 psf			15 psf			20 psf			25 psf			30 psf			35 psf			40 psf		
			L/120	L/240	L/360	L/240	L/360	L/600	L/240	L/360	L/600	L/240	L/360	L/600	L/240	L/360	L/600	L/240	L/360	L/600	L/240	L/360	L/600
550S162-54	12	33	39'-4"	31'-3"	27'-3"	24'-5"	21'-4"	18'-0"	22'-2"	19'-4"	16'-4"	20'-7"	18'-0"	15'-2"	19'-4"	16'-11"	14'-3"	18'-5"	16'-1"	13'-7"	17'-7"	15'-4"	13'-0"
	16		35'-9"	28'-5"	24'-10"	22'-2"	19'-4"	16'-4"	20'-2"	17'-7"	14'-10"	18'-8"	16'-4"	13'-9"	17'-7"	15'-4"	13'-0"	16'-4"e	14'-7"	12'-4"	15'-3"e	14'-0"	11'-9"
	24		31'-3"	24'-10"	21'-8"	19'-4"	16'-11"	14'-3"	17'-7"	15'-4"	13'-0"	15'-9"e	14'-3"	12'-0"	14'-5"e	13'-5"e	11'-4"	13'-4"e	12'-9"e	10'-9"	12'-6"e	12'-2"e	10'-3"e
550S162-54	12	50	39'-4"	31'-3"	27'-3"	24'-5"	21'-4"	18'-0"	22'-2"	19'-4"	16'-4"	20'-7"	18'-0"	15'-2"	19'-4"	16'-11"	14'-3"	18'-5"	16'-1"	13'-7"	17'-7"	15'-4"	13'-0"
	16		35'-9"	28'-5"	24'-10"	22'-2"	19'-4"	16'-4"	20'-2"	17'-7"	14'-10"	18'-8"	16'-4"	13'-9"	17'-7"	15'-4"	13'-0"	16'-9"	14'-7"	12'-4"	16'-0"	14'-0"	11'-9"
	24		31'-3"	24'-10"	21'-8"	19'-4"	16'-11"	14'-3"	17'-7"	15'-4"	13'-0"	16'-4"	14'-3"	12'-0"	15'-4"	13'-5"	11'-4"	14'-7"	12'-9"	10'-9"	14'-0"	12'-2"	10'-3"
550S162-68	12	50	42'-2"	33'-6"	29'-3"	26'-2"	22'-10"	19'-3"	23'-9"	20'-9"	17'-6"	22'-1"	19'-3"	16'-3"	20'-9"	18'-2"	15'-3"	19'-9"	17'-3"	14'-6"	18'-10"	16'-6"	13'-11"
	16		38'-4"	30'-5"	26'-7"	23'-9"	20'-9"	17'-6"	21'-7"	18'-10"	15'-11"	20'-0"	17'-6"	14'-9"	18'-10"	16'-6"	13'-11"	17'-11"	15'-8"	13'-2"	17'-2"	15'-0"	12'-7"
	24		33'-6"	26'-7"	23'-3"	20'-9"	18'-2"	15'-3"	18'-10"	16'-6"	13'-11"	17'-6"	15'-3"	12'-11"	16'-6"	14'-5"	12'-2"	15'-8"	13'-8"	11'-6"	15'-0"	13'-1"	11'-0"
550S162-97	12	50	46'-9"	37'-1"	32'-5"	28'-11"	25'-4"	21'-4"	26'-4"	23'-0"	19'-5"	24'-5"	21'-4"	18'-0"	23'-0"	20'-1"	16'-11"	21'-10"	19'-1"	16'-1"	20'-11"	18'-3"	15'-5"
	16		42'-5"	33'-8"	29'-5"	26'-4"	23'-0"	19'-5"	23'-11"	20'-11"	17'-7"	22'-2"	19'-5"	16'-4"	20'-11"	18'-3"	15'-5"	19'-10"	17'-4"	14'-7"	19'-0"	16'-7"	14'-0"
	24		37'-1"	29'-5"	25'-9"	23'-0"	20'-1"	16'-11"	20'-11"	18'-3"	15'-5"	19'-5"	16'-11"	14'-3"	18'-3"	15'-11"	13'-5"	17'-4"	15'-2"	12'-9"	16'-7"	14'-6"	12'-3"
550S200-33	12	33	35'-4"	28'-0"	24'-6"	21'-11"e	19'-1"e	16'-2"e	19'-1"e	17'-4"e	14'-8"e	17'-1"e	16'-2"e	13'-7"e	15'-7"e	15'-2"e	12'-10"e	14'-5"e	14'-5"e	12'-2"e	13'-6"e	13'-6"e	11'-8"e
	16		32'-1"e	25'-6"	22'-3"	19'-1"e	17'-4"e	14'-8"e	16'-6"e	15'-9"e	13'-4"e	14'-9"e	14'-8"e	12'-4"e	13'-6"e	13'-6"e	11'-8"e	12'-6"e	12'-6"e	11'-1"e	11'-8"e	11'-8"e	10'-7"e
	24		27'-0"e	22'-3"e	19'-5"	15'-7"e	15'-2"e	12'-10"e	13'-6"e	13'-6"e	11'-8"e	12'-1"e	12'-1"e	10'-10"e	11'-0"e	11'-0"e	10'-2"e	10'-2"e	10'-2"e	9'-8"e	9'-6"e	9'-6"e	9'-3"e
550S200-43	12	33	38'-7"	30'-7"	26'-9"	23'-11"	20'-11"	17'-7"	21'-9"	19'-0"	16'-0"	20'-2"e	17'-7"	14'-10"	18'-5"e	16'-7"e	14'-0"	17'-0"e	15'-9"e	13'-3"e	15'-11"e	15'-1"e	12'-8"e
	16		35'-1"	27'-10"	24'-4"	21'-9"	19'-0"	16'-0"	19'-6"e	17'-3"e	14'-6"	17'-6"e	16'-0"e	13'-6"e	15'-11"e	15'-1"e	12'-8"e	14'-9"e	14'-4"e	12'-1"e	13'-10"e	13'-8"e	11'-6"e
	24		30'-7"	24'-4"	21'-3"	18'-5"e	16'-7"e	14'-0"	15'-11"e	15'-1"e	12'-8"e	14'-3"e	14'-0"e	11'-10"e	13'-0"e	13'-0"e	11'-1"e	12'-1"e	12'-1"e	10'-6"e	11'-3"e	11'-3"e	10'-1"e
550S200-54	12	33	41'-5"	32'-10"	28'-8"	25'-8"	22'-5"	18'-11"	23'-4"	20'-4"	17'-2"	21'-8"	18'-11"	15'-11"	20'-4"	17'-10"	15'-0"	19'-4"	16'-11"	14'-3"	18'-6"	16'-2"	13'-8"
	16		37'-7"	29'-10"	26'-1"	23'-4"	20'-4"	17'-2"	21'-2"	18'-6"	15'-7"	19'-8"	17'-2"	14'-6"	18'-6"	16'-2"	13'-8"	17'-5"e	15'-4"	12'-11"	16'-4"e	14'-8"e	12'-5"
	24		32'-10"	26'-1"	22'-9"	20'-4"	17'-10"	15'-0"	18'-6"	16'-2"	13'-8"	16'-10"e	15'-0"	12'-8"	15'-5"e	14'-1"e	11'-11"	14'-3"e	13'-5"e	11'-4"e	13'-4"e	12'-10"e	10'-10"e
550S200-54	12	50	41'-5"	32'-10"	28'-8"	25'-8"	22'-5"	18'-11"	23'-4"	20'-4"	17'-2"	21'-8"	18'-11"	15'-11"	20'-4"	17'-10"	15'-0"	19'-4"	16'-11"	14'-3"	18'-6"	16'-2"	13'-8"
	16		37'-7"	29'-10"	26'-1"	23'-4"	20'-4"	17'-2"	21'-2"	18'-6"	15'-7"	19'-8"	17'-2"	14'-6"	18'-6"	16'-2"	13'-8"	17'-7"	15'-4"	12'-11"	16'-10"	14'-8"	12'-5"
	24		32'-10"	26'-1"	22'-9"	20'-4"	17'-10"	15'-0"	18'-6"	16'-2"	13'-8"	17'-2"	15'-0"	12'-8"	16'-2"	14'-1"	11'-11"	15'-4"	13'-5"	11'-4"	14'-8"e	12'-10"	10'-10"
550S200-68	12	50	44'-5"	35'-3"	30'-10"	27'-6"	24'-1"	20'-3"	25'-0"	21'-10"	18'-5"	23'-3"	20'-3"	17'-1"	21'-10"	19'-1"	16'-1"	20'-9"	18'-2"	15'-4"	19'-10"	17'-4"	14'-8"
	16		40'-4"	32'-0"	28'-0"	25'-0"	21'-10"	18'-5"	22'-9"	19'-10"	16'-9"	21'-1"	18'-5"	15'-7"	19'-10"	17'-4"	14'-8"	18'-10"	16'-6"	13'-11"	18'-0"	15'-9"	13'-3"
	24		35'-3"	28'-0"	24'-5"	21'-10"	19'-1"	16'-1"	19'-10"	17'-4"	14'-8"	18'-5"	16'-1"	13'-7"	17'-4"	15'-2"	12'-9"	16'-6"	14'-5"	12'-2"	15'-9"	13'-9"	11'-7"
550S200-97	12	50	49'-3"	39'-1"	34'-2"	30'-7"	26'-8"	22'-6"	27'-9"	24'-3"	20'-5"	25'-9"	22'-6"	19'-0"	24'-3"	21'-2"	17'-10"	23'-0"	20'-1"	17'-0"	22'-0"	19'-3"	16'-3"
	16		44'-9"	35'-7"	31'-1"	27'-9"	24'-3"	20'-5"	25'-3"	22'-0"	18'-7"	23'-5"	20'-5"	17'-3"	22'-0"	19'-3"	16'-3"	20'-11"	18'-3"	15'-5"	20'-0"	17'-6"	14'-9"
	24		39'-1"	31'-1"	27'-1"	24'-3"	21'-2"	17'-10"	22'-0"	19'-3"	16'-3"	20'-5"	17'-10"	15'-1"	19'-3"	16'-10"	14'-2"	18'-3"	16'-0"	13'-6"	17'-6"	15'-3"	12'-11"
600S137-33	12	33	34'-1"	27'-4"	23'-10"	19'-8"e	18'-7"e	15'-8"e	17'-1"e	16'-11"e	14'-3"e	15'-3"e	15'-3"e	13'-3"e	13'-11"e	13'-11"e	12'-6"e	12'-11"e	12'-11"e	11'-10"e	12'-1"e	12'-1"e	11'-4"e
	16		29'-6"	24'-10"	21'-8"	17'-1"e	16'-11"e	14'-3"e	14'-9"e	14'-9"e	13'-0"e	13'-3"e	13'-3"e	12'-0"e	12'-1"e	12'-1"e	11'-4"e	11'-2"e	11'-2"e	10'-9"e	10'-5"e	10'-5"e	10'-3"e
	24		24'-1"e	21'-8"e	18'-11"	13'-11"e	13'-11"e	12'-6"e	12'-1"e	12'-1"e	11'-4"e	10'-9"e	10'-9"e	10'-6"e	9'-10"e	9'-10"e	9'-10"e	9'-1"e	9'-1"e	9'-1"e	8'-6"e	8'-6"e	8'-6"e
600S137-43	12	33	37'-8"	29'-11"	26'-2"	23'-4"	20'-5"	17'-3"	20'-6"	18'-6"	15'-8"	18'-4"e	17'-3"e	14'-6"	16'-8"e	16'-2"e	13'-8"	15'-6"e	15'-5"e	13'-0"e	14'-6"e	14'-6"e	12'-5"e
	16		34'-3"	27'-2"	23'-9"	20'-6"	18'-6"	15'-8"	17'-9"e	16'-10"e	14'-3"	15'-10"e	15'-8"e	13'-2"e	14'-6"e	14'-6"e	12'-5"e	13'-5"e	13'-5"e	11'-9"e	12'-6"e	12'-6"e	11'-3"e
	24		28'-11"	23'-9"	20'-9"	16'-8"e	16'-2"e	13'-8"	14'-6"e	14'-6"e	12'-5"e	12'-11"e	12'-11"e	11'-6"e	11'-10"e	11'-10"e	10'-10"e	10'-11"e	10'-11"e	10'-4"e	10'-3"e	10'-3"e	9'-10"e
600S137-54	12	33	40'-5"	32'-1"	28'-0"	25'-1"	21'-11"	18'-5"	22'-9"	19'-11"	16'-9"	20'-10"	18'-5"	15'-7"	19'-1"	17'-4"	14'-8"	17'-8"	16'-6"	13'-11"	16'-6"	15'-9"	13'-4"
	16		36'-9"	29'-2"	25'-6"	22'-9"	19'-11"	16'-9"	20'-2"	18'-1"	15'-3"	18'-1"	16'-9"	14'-2"	16'-6"	15'-9"	13'-4"	15'-3"	15'-0"	12'-8"	14'-3"e	14'-3"e	12'-1"
	24		32'-1"	25'-6"	22'-3"	19'-1"	17'-4"	14'-8"	16'-6"	15'-9"	13'-4"	14'-9"e	14'-8"	12'-4"	13'-6"e	13'-6"e	11'-8"	12'-6"e	12'-6"e	11'-1"e	11'-8"e	11'-8"e	10'-7"e
600S137-54	12	50	40'-5"	32'-1"	28'-0"	25'-1"	21'-11"	18'-5"	22'-9"	19'-11"	16'-9"	21'-2"	18'-5"	15'-7"	19'-11"	17'-4"	14'-8"	18'-1"	16'-6"	13'-11"	18'-1"	15'-9"	13'-4"
	16		36'-9"	29'-2"	25'-6"	22'-9"	19'-11"	16'-9"	20'-8"	18'-1"	15'-3"	19'-2"	16'-9"	14'-2"	18'-1"	15'-9"	13'-4"	17'-2"	15'-0"	12'-8"	16'-5"	14'-4"	12'-1"
	24		32'-1"	25'-6"	22'-3"	19'-11"	17'-4"	14'-8"	18'-1"	15'-9"	13'-4"	16'-9"	14'-8"	12'-4"	15'-9"	13'-9"	11'-8"	14'-9"	13'-1"	11'-1"	13'-10"	12'-6"	10'-7"
600S137-68	12	50	43'-4"	34'-4"	30'-0"	26'-10"	23'-5"	19'-9"	24'-5"	21'-4"	18'-0"	22'-8"	19'-9"	16'-8"	21'-4"	18'-7"	15'-8"	20'-3"	17'-8"	14'-11"	19'-4"	16'-11"	14'-3"
	16		39'-4"	31'-3"	27'-3"	24'-5"	21'-4"	18'-0"	22'-2"	19'-4"	16'-4"	20'-7"	18'-0"	15'-2"	19'-4"	16'-11"	14'-3"	18'-5"	16'-1"	13'-7"	17'-7"	15'-4"	12'-11"
	24		34'-4"	27'-3"	23'-10"	21'-4"	18'-7"	15'-8"	19'-4"	16'-11"	14'-3"	18'-0"	15'-8"	13'-3"	16'-11"	14'-9"	12'-5"	16'-1"	14'-0"	11'-10"	15'-4"	13'-5"	11'-4"
600S137-97	12	50	47'-11"	38'-0"	33'-3"	29'-8"	25'-11"	21'-10"	27'-0"	23'-7"	19'-10"	25'-0"	21'-10"	18'-5"	23'-7"	20'-7"	17'-4"	22'-5"	19'-7"	16'-6"	21'-5"	18'-8"	15'-9"
	16		43'-6"	34'-6"	30'-2"	27'-0"	23'-7"	19'-10"	24'-6"	21'-5"	18'-1"	22'-9"	19'-10"	16'-9"	21'-5"	18'-8"	15'-9"	20'-4"	17'-9"	15'-0"	19'-5"	17'-0"	14'-4"
	24		38'-0"	30'-2"	26'-4"	23'-7"	20'-7"	17'-4"	21'-5"	18'-8"	15'-9"	19'-10"	17'-4"	14'-8"	18'-8"	16'-4"	13'-9"	17'-9"	15'-6"	13'-1"	17'-0"	14'-10"	12'-6"
600S162-33	12	33	36'-1"	28'-8"	25'-0"	22'-4"e	19'-7"e	16'-6"e	19'-5"e	17'-9"e	15'-0"e	17'-5"e	16'-6"e	13'-11"e	15'-10"e	15'-6"e	13'-1"e	14'-8"e	14'-8"e	12'-5"e	13'-9"e	13'-9"e	11'-11"e
	16		32'-9"e	26'-0"	22'-9"	19'-5"e	17'-9"e	15'-0"e	16'-10"e	16'-2"e	13'-7"e	15'-1"e	15'-0"e	12'-8"e	13'-9"e	13'-9"e	11'-11"e	12'-9"e	12'-9"e	11'-3"e	11'-11"e	11'-11"e	10'-10"e
	24		27'-6"e	22'-9"e	19'-10"	15'-10"e	15'-6"e	13'-1"e	13'-9"e	13'-9"e	11'-11"e	12'-3"e	12'-3"e	11'-0"e	11'-3"e	11'-3"e	10'-5"e	10'-5"e	10'-5"e	9'-10"e	9'-9"e	9'-9"e	9'-5"e
600S162-43	12	33	39'-4"	31'-2"	27'-3"	24'-4"	21'-3"	17'-11"	22'-2"e	19'-4"	16'-4"	20'-7"e	17'-11"e	15'-2"	19'-0"e	16'-11"e	14'-3"	17'-7"e	16'-1"e	13'-6"e	16'-6"e	15'-4"e	12'-11"e
	16		35'-9"	28'-4"	24'-9"	22'-2"e	19'-4"	16'-4"	20'-1"e	17'-7"e	14'-10"	18'-1"e	16'-4"e	13'-9"e	16'-6"e	15'-4"e	12'-11"e	15'-3"e	14'-7"e	12'-4"e	14'-3"e	13'-11"e	11'-9"e
	24		31'-2"	24'-9"	21'-8"	19'-0"e	16'-11"e	14'-3"	16'-6"e	15'-4"e	12'-11"e	14'-9"e	14'-3"e	12'-0"e	13'-5"e	13'-5"e	11'-4"e	12'-5"e	12'-5"e	10'-9"e	11'-8"e	11'-8"e	10'-3"e
600S162-54	12	33	42'-2"	33'-6"	29'-3"	26'-2"	22'-10"	19'-3"	23'-9"	20'-9"	17'-6"	22'-1"	19'-3"	16'-3"	20'-9"	18'-1"	15'-3"	19'-8"	17'-3"	14'-6"	18'-9"e	16'-6"	13'-11"
	16		38'-4"	30'-5"	26'-7"	23'-9"	20'-9"	17'-6"	21'-7"	18'-10"	15'-11"	20'-0"	17'-6"	14'-9"	18'-9"e	16'-6"	13'-11"	17'-4"e	15'-8"	13'-2"	16'-3"e	15'-0"e	12'-7"
	24		33'-6"	26'-7"	23'-3"	20'-9"	18'-1"	15'-3"	18'-9"e	16'-6"	13'-11"	16'-9"e	15'-3"e	12'-11"	15'-4"e	14'-5"e	12'-2"	14'-2"e	13'-8"e	11'-6"e	13'-3"e	13'-1"e	11'-0"e

See Curtain Wall Limiting Heights Table Notes

Wall Height

Stud Member	Spacing, in, oc	Fy, ksi	5 psf			15 psf			20 psf			25 psf			30 psf			35 psf			40 psf		
			L/120	L/240	L/360	L/240	L/360	L/600	L/240	L/360	L/600	L/240	L/360	L/600	L/240	L/360	L/600	L/240	L/360	L/600	L/240	L/360	L/600
600S162-54	12	50	42'-2"	33'-6"	29'-3"	26'-2"	22'-10"	19'-3"	23'-9"	20'-9"	17'-6"	22'-1"	19'-3"	16'-3"	20'-9"	18'-1"	15'-3"	19'-8"	17'-3"	14'-6"	18'-10"	16'-6"	13'-11"
	16		38'-4"	30'-5"	26'-7"	23'-9"	20'-9"	17'-6"	21'-7"	18'-10"	15'-11"	20'-0"	17'-6"	14'-9"	18'-10"	16'-6"	13'-11"	17'-11"	15'-8"	13'-2"	17'-2"	15'-0"	12'-7"
	24		33'-6"	26'-7"	23'-3"	20'-9"	18'-1"	15'-3"	18'-10"	16'-6"	13'-11"	17'-6"	15'-3"	12'-11"	16'-6"	14'-5"	12'-2"	15'-8"	13'-8"	11'-6"	15'-0"e	13'-1"	11'-0"
600S162-68	12	50	45'-3"	35'-11"	31'-4"	28'-0"	24'-6"	20'-8"	25'-6"	22'-3"	18'-9"	23'-8"	20'-8"	17'-5"	22'-3"	19'-5"	16'-5"	21'-2"	18'-6"	15'-7"	20'-3"	17'-8"	14'-11"
	16		41'-1"	32'-7"	28'-6"	25'-6"	22'-3"	18'-9"	23'-2"	20'-3"	17'-1"	21'-6"	18'-9"	15'-10"	20'-3"	17'-8"	14'-11"	19'-2"	16'-9"	14'-2"	18'-4"	16'-0"	13'-6"
	24		35'-11"	28'-6"	24'-11"	22'-3"	19'-5"	16'-5"	20'-3"	17'-8"	14'-11"	18'-9"	16'-5"	13'-10"	17'-8"	15'-5"	13'-0"	16'-9"	14'-8"	12'-4"	16'-0"	14'-0"	11'-10"
600S162-97	12	50	50'-1"	39'-9"	34'-9"	31'-1"	27'-2"	22'-11"	28'-3"	24'-8"	20'-10"	26'-2"	22'-11"	19'-4"	24'-8"	21'-6"	18'-2"	23'-5"	20'-5"	17'-3"	22'-5"	19'-7"	16'-6"
	16		45'-6"	36'-2"	31'-7"	28'-3"	24'-8"	20'-10"	25'-8"	22'-5"	18'-11"	23'-10"	20'-10"	17'-6"	22'-5"	19'-7"	16'-6"	21'-3"	18'-7"	15'-8"	20'-4"	17'-9"	15'-0"
	24		39'-9"	31'-7"	27'-7"	24'-8"	21'-6"	18'-2"	22'-5"	19'-7"	16'-6"	20'-10"	18'-2"	15'-4"	19'-7"	17'-1"	14'-5"	18'-7"	16'-3"	13'-8"	17'-9"	15'-6"	13'-1"
600S162-118	12	50	52'-11"	42'-0"	36'-8"	32'-10"	28'-8"	24'-2"	29'-10"	26'-1"	22'-0"	27'-8"	24'-2"	20'-5"	26'-1"	22'-9"	19'-2"	24'-9"	21'-7"	18'-3"	23'-8"	20'-8"	17'-5"
	16		48'-1"	38'-2"	33'-4"	29'-10"	26'-1"	22'-0"	27'-1"	23'-8"	19'-11"	25'-2"	22'-0"	18'-6"	23'-8"	20'-8"	17'-5"	22'-6"	19'-8"	16'-7"	21'-6"	18'-9"	15'-10"
	24		42'-0"	33'-4"	29'-2"	26'-1"	22'-9"	19'-2"	23'-8"	20'-8"	17'-5"	22'-0"	19'-2"	16'-2"	20'-8"	18'-1"	15'-3"	19'-8"	17'-2"	14'-6"	18'-9"	16'-5"	13'-10"
600S200-33	12	33	37'-10"	30'-0"	26'-3"	23'-2"e	20'-6"e	17'-3"e	20'-1"e	18'-7"e	15'-8"e	17'-11"e	17'-3"e	14'-7"e	16'-4"e	16'-3"e	13'-8"e	15'-2"e	15'-2"e	13'-0"e	14'-2"e	14'-2"e	12'-5"e
	16		34'-4"e	27'-3"	23'-10"	20'-1"e	18'-7"e	15'-8"e	17'-4"e	16'-11"e	14'-3"e	15'-6"e	15'-6"e	13'-3"e	14'-2"e	14'-2"e	12'-5"e	13'-1"e	13'-1"e	11'-10"e	12'-3"e	12'-3"e	11'-4"e
	24		28'-4"e	23'-10"e	20'-10"e	16'-4"e	16'-3"e	13'-8"e	14'-2"e	14'-2"e	12'-5"e	12'-8"e	12'-8"e	11'-7"e	11'-7"e	11'-7"e	10'-11"e	10'-9"e	10'-9"e	10'-4"e	10'-0"e	10'-0"e	9'-11"e
600S200-43	12	33	41'-3"	32'-9"	28'-7"	25'-7"	22'-4"	18'-10"	23'-3"e	20'-4"	17'-2"	21'-5"e	18'-10"e	15'-11"	19'-6"e	17'-9"e	15'-0"e	18'-1"e	16'-10"e	14'-3"e	16'-11"e	16'-1"e	13'-7"e
	16		37'-6"	29'-9"	26'-0"	23'-3"e	20'-4"	17'-2"	20'-9"e	18'-5"e	15'-7"	18'-6"e	17'-2"e	14'-5"e	16'-11"e	16'-1"e	13'-7"e	15'-8"e	15'-4"e	12'-11"e	14'-8"e	14'-8"e	12'-4"e
	24		32'-9"	26'-0"	22'-9"	19'-6"e	17'-9"e	15'-0"e	16'-11"e	16'-1"e	13'-7"e	15'-2"e	15'-0"e	12'-7"e	13'-10"e	13'-10"e	11'-11"e	12'-9"e	12'-9"e	11'-3"e	12'-0"e	12'-0"e	10'-9"e
600S200-54	12	33	44'-4"	35'-2"	30'-9"	27'-6"	24'-0"	20'-3"	24'-11"	21'-10"	18'-5"	23'-2"	20'-3"	17'-1"	21'-10"	19'-1"	16'-1"	20'-9"	18'-1"	15'-3"	19'-10"e	17'-4"	14'-7"
	16		40'-3"	32'-0"	27'-11"	24'-11"	21'-10"	18'-5"	22'-8"	19'-10"	16'-8"	21'-1"	18'-5"	15'-6"	19'-10"e	17'-4"	14'-7"	18'-6"e	16'-5"e	13'-10"	17'-4"e	15'-9"e	13'-3"
	24		35'-2"	27'-11"	24'-5"	21'-10"	19'-1"	16'-1"	19'-10"e	17'-4"	14'-7"	17'-10"e	16'-1"e	13'-7"	16'-4"e	15'-1"e	12'-9"e	15'-1"e	14'-4"e	12'-1"e	14'-2"e	13'-9"e	11'-7"e
600S200-54	12	50	44'-4"	35'-2"	30'-9"	27'-6"	24'-0"	20'-3"	24'-11"	21'-10"	18'-5"	23'-2"	20'-3"	17'-1"	21'-10"	19'-1"	16'-1"	20'-9"	18'-1"	15'-3"	19'-10"	17'-4"	14'-7"
	16		40'-3"	32'-0"	27'-11"	24'-11"	21'-10"	18'-5"	22'-8"	19'-10"	16'-8"	21'-1"	18'-5"	15'-6"	19'-10"	17'-4"	14'-7"	18'-10"	16'-5"	13'-10"	18'-0"	15'-9"	13'-3"
	24		35'-2"	27'-11"	24'-5"	21'-10"	19'-1"	16'-1"	19'-10"	17'-4"	14'-7"	18'-5"	16'-1"	13'-7"	17'-4"	15'-1"	12'-9"	16'-5"e	14'-4"	12'-1"	15'-9"e	13'-9"	11'-7"
600S200-68	12	50	47'-7"	37'-9"	33'-0"	29'-6"	25'-9"	21'-9"	26'-9"	23'-5"	19'-9"	24'-10"	21'-9"	18'-4"	23'-5"	20'-5"	17'-3"	22'-3"	19'-5"	16'-4"	21'-3"	18'-7"	15'-8"
	16		43'-2"	34'-4"	29'-11"	26'-9"	23'-5"	19'-9"	24'-4"	21'-3"	17'-11"	22'-7"	19'-9"	16'-8"	21'-3"	18'-7"	15'-8"	20'-2"	17'-8"	14'-11"	19'-4"	16'-10"	14'-3"
	24		37'-9"	29'-11"	26'-2"	23'-5"	20'-5"	17'-3"	21'-3"	18'-7"	15'-8"	19'-9"	17'-3"	14'-6"	18'-7"	16'-3"	13'-8"	17'-8"	15'-5"	13'-0"	16'-10"	14'-9"	12'-5"
600S200-97	12	50	52'-10"	41'-11"	36'-7"	32'-9"	28'-7"	24'-1"	29'-9"	26'-0"	21'-11"	27'-7"	24'-1"	20'-4"	26'-0"	22'-8"	19'-2"	24'-8"	21'-7"	18'-2"	23'-7"	20'-7"	17'-5"
	16		48'-0"	38'-1"	33'-3"	29'-9"	26'-0"	21'-11"	27'-0"	23'-7"	19'-11"	25'-1"	21'-11"	18'-6"	23'-7"	20'-7"	17'-5"	22'-5"	19'-7"	16'-6"	21'-5"	18'-9"	15'-10"
	24		41'-11"	33'-3"	29'-1"	26'-0"	22'-8"	19'-2"	23'-7"	20'-7"	17'-5"	21'-11"	19'-2"	16'-2"	20'-7"	18'-0"	15'-2"	19'-7"	17'-1"	14'-5"	18'-9"	16'-4"	13'-10"
600S200-118	12	50	55'-10"	44'-4"	38'-9"	34'-7"	30'-3"	25'-6"	31'-5"	27'-6"	23'-2"	29'-2"	25'-6"	21'-6"	27'-6"	24'-0"	20'-3"	26'-1"	22'-10"	19'-3"	25'-0"	21'-10"	18'-5"
	16		50'-9"	40'-3"	35'-2"	31'-5"	27'-6"	23'-2"	28'-7"	25'-0"	21'-1"	26'-6"	23'-2"	19'-7"	25'-0"	21'-10"	18'-5"	23'-9"	20'-9"	17'-6"	22'-8"	19'-10"	16'-9"
	24		44'-4"	35'-2"	30'-9"	27'-6"	24'-0"	20'-3"	25'-0"	21'-10"	18'-5"	23'-2"	20'-3"	17'-1"	21'-10"	19'-1"	16'-1"	20'-9"	18'-1"	15'-3"	19'-10"	17'-4"	14'-7"
600S250-43	12	33	43'-3"	34'-4"	30'-0"	26'-10"	23'-5"	19'-9"	24'-4"e	21'-3"	17'-11"	21'-11"e	19'-9"e	16'-8"	20'-0"e	18'-7"e	15'-8"e	18'-6"e	17'-8"e	14'-11"e	17'-4"e	16'-11"e	14'-3"e
	16		39'-3"	31'-2"	27'-3"	24'-4"e	21'-3"	17'-11"	21'-2"e	19'-4"e	16'-4"e	18'-11"e	17'-11"e	15'-2"e	17'-4"e	16'-11"e	14'-3"e	16'-0"e	16'-0"e	13'-6"e	15'-0"e	15'-0"e	12'-11"e
	24		34'-4"	27'-3"	23'-10"	20'-0"e	18'-7"e	15'-8"e	17'-4"e	16'-11"e	14'-3"e	15'-6"e	15'-6"e	13'-3"e	14'-2"e	14'-2"e	12'-5"e	13'-1"e	13'-1"e	11'-10"e	12'-3"e	12'-3"e	11'-4"e
600S250-54	12	33	46'-5"	36'-10"	32'-2"	28'-9"	25'-2"	21'-2"	26'-2"	22'-10"	19'-3"	24'-3"	21'-2"	17'-11"	22'-6"	19'-11"	16'-10"	20'-10"	18'-11"	16'-0"	19'-5"e	18'-2"	15'-4"
	16		42'-2"	33'-6"	29'-3"	26'-2"	22'-10"	19'-3"	23'-9"	20'-9"	17'-6"	21'-4"	19'-3"	16'-3"	19'-5"e	18'-2"	15'-4"	18'-0"e	17'-3"e	14'-6"	16'-10"e	16'-6"e	13'-11"e
	24		36'-10"	29'-3"	25'-7"	22'-6"	19'-11"	16'-10"	19'-5"e	18'-2"	15'-4"	17'-5"e	16'-10"e	14'-2"	15'-11"e	15'-10"e	13'-4"e	14'-8"e	14'-8"e	12'-8"e	13'-9"e	13'-9"e	12'-2"e
600S250-54	12	50	46'-3"	36'-9"	32'-1"	28'-8"	25'-1"	21'-1"	26'-1"	22'-9"	19'-2"	24'-2"	21'-1"	17'-10"	22'-9"	19'-11"	16'-9"	21'-7"	18'-11"	15'-11"	20'-8"	18'-1"	15'-3"
	16		42'-0"	33'-4"	29'-2"	26'-1"	22'-9"	19'-2"	23'-8"	20'-8"	17'-5"	22'-0"	19'-2"	16'-2"	20'-8"	18'-1"	15'-3"	19'-8"	17'-2"	14'-6"	18'-9"	16'-5"	13'-10"
	24		36'-9"	29'-2"	25'-5"	22'-9"	19'-11"	16'-9"	20'-8"	18'-1"	15'-3"	19'-2"	16'-9"	14'-2"	18'-1"	15'-9"	13'-4"	17'-2"e	15'-0"	12'-8"	16'-3"e	14'-4"e	12'-1"
600S250-68	12	50	49'-10"	39'-7"	34'-7"	30'-11"	27'-0"	22'-9"	28'-1"	24'-6"	20'-8"	26'-1"	22'-9"	19'-2"	24'-6"	21'-5"	18'-1"	23'-4"	20'-4"	17'-2"	22'-3"	19'-6"	16'-5"
	16		45'-4"	35'-11"	31'-5"	28'-1"	24'-6"	20'-8"	25'-6"	22'-3"	18'-10"	23'-8"	20'-8"	17'-5"	22'-3"	19'-6"	16'-5"	21'-2"	18'-6"	15'-7"	20'-3"	17'-8"	14'-11"
	24		39'-7"	31'-5"	27'-5"	24'-6"	21'-5"	18'-1"	22'-3"	19'-6"	16'-5"	20'-8"	18'-1"	15'-3"	19'-6"	17'-0"	14'-4"	18'-6"	16'-2"	13'-8"	17'-8"	15'-5"	13'-0"
600S250-97	12	50	55'-5"	44'-0"	38'-5"	34'-4"	30'-0"	25'-4"	31'-3"	27'-3"	23'-0"	29'-0"	25'-4"	21'-4"	27'-3"	23'-10"	20'-1"	25'-11"	22'-8"	19'-1"	24'-9"	21'-8"	18'-3"
	16		50'-4"	40'-0"	34'-11"	31'-3"	27'-3"	23'-0"	28'-4"	24'-9"	20'-11"	26'-4"	23'-0"	19'-5"	24'-9"	21'-8"	18'-3"	23'-6"	20'-7"	17'-4"	22'-6"	19'-8"	16'-7"
	24		44'-0"	34'-11"	30'-6"	27'-3"	23'-10"	20'-1"	24'-9"	21'-8"	18'-3"	23'-0"	20'-1"	16'-11"	21'-8"	18'-11"	15'-11"	20'-7"	18'-0"	15'-2"	19'-8"	17'-2"	14'-6"
600S250-118	12	50	58'-9"	46'-7"	40'-9"	36'-5"	31'-9"	26'-10"	33'-1"	28'-11"	24'-4"	30'-8"	26'-10"	22'-7"	28'-11"	25'-3"	21'-3"	27'-5"	24'-0"	20'-3"	26'-3"	22'-11"	19'-4"
	16		53'-4"	42'-4"	37'-0"	33'-1"	28'-11"	24'-4"	30'-0"	26'-3"	22'-2"	27'-11"	24'-4"	20'-7"	26'-3"	22'-11"	19'-4"	24'-11"	21'-9"	18'-4"	23'-10"	20'-10"	17'-7"
	24		46'-7"	37'-0"	32'-4"	28'-11"	25'-3"	21'-3"	26'-3"	22'-11"	19'-4"	24'-4"	21'-3"	17'-11"	22'-11"	20'-0"	16'-11"	21'-9"	19'-0"	16'-1"	20'-10"	18'-2"	15'-4"
600S300-54	12	33	48'-3"	38'-3"	33'-5"	29'-11"	26'-1"	22'-0"	27'-2"	23'-9"	20'-0"	25'-1"	22'-0"	18'-7"	22'-11"	20'-9"	17'-6"	21'-3"e	19'-8"	16'-7"	19'-10"e	18'-10"e	15'-11"
	16		43'-10"	34'-9"	30'-5"	27'-2"	23'-9"	20'-0"	24'-4"	21'-7"	18'-2"	21'-9"	20'-0"	16'-10"	19'-10"e	18'-10"e	15'-11"	18'-5"e	17'-11"e	15'-1"	17'-2"e	17'-1"e	14'-5"e
	24		38'-3"	30'-5"	26'-6"	22'-11"	20'-9"	17'-6"	19'-10"e	18'-10"e	15'-11"	17'-9"e	17'-6"e	14'-9"e	16'-2"e	16'-2"e	13'-10"e	15'-0"e	15'-0"e	13'-2"e	14'-0"e	14'-0"e	12'-7"e
600S300-54	12	50	47'-3"	37'-6"	32'-9"	29'-4"	25'-7"	21'-7"	26'-8"	23'-3"	19'-7"	24'-9"	21'-7"	18'-3"	23'-3"	20'-4"	17'-2"	22'-1"	19'-4"	16'-3"	21'-2"	18'-6"	15'-7"
	16		43'-0"	34'-1"	29'-9"	26'-8"	23'-3"	19'-7"	24'-2"	21'-2"	17'-10"	22'-6"	19'-7"	16'-7"	21'-2"	18'-6"	15'-7"	20'-1"	17'-6"	14'-10"	19'-2"	16'-9"	14'-2"
	24		37'-6"	29'-9"	26'-0"	23'-3"	20'-4"	17'-2"	21'-2"	18'-6"	15'-7"	19'-7"	17'-2"	14'-5"	18'-6"	16'-2"	13'-7"	17'-6"e	15'-4"	12'-11"	16'-6"e	14'-8"e	12'-4"

See Curtain Wall Limiting Heights Table Notes

Wall Height

Stud Member	Spacing, in, oc	Fy, ksi	5 psf			15 psf			20 psf			25 psf			30 psf			35 psf			40 psf		
			L/120	L/240	L/360	L/240	L/360	L/600	L/240	L/360	L/600	L/240	L/360	L/600	L/240	L/360	L/600	L/240	L/360	L/600	L/240	L/360	L/600
600S300-68	12	50	51'-7"	40'-11"	35'-9"	32'-0"	27'-11"	23'-7"	29'-0"	25'-4"	21'-5"	26'-11"	23'-7"	19'-10"	25'-4"	22'-2"	18'-8"	24'-1"	21'-1"	17'-9"	23'-1"	20'-2"	17'-0"
	16		46'-10"	37'-2"	32'-6"	29'-0"	25'-4"	21'-5"	26'-5"	23'-1"	19'-5"	24'-6"	21'-5"	18'-1"	23'-1"	20'-2"	17'-0"	21'-11"	19'-1"	16'-2"	20'-11"	18'-4"	15'-5"
	24		40'-11"	32'-6"	28'-5"	25'-4"	22'-2"	18'-8"	23'-1"	20'-2"	17'-0"	21'-5"	18'-8"	15'-9"	20'-2"	17'-7"	14'-10"	19'-1"	16'-8"	14'-1"	18'-4"	16'-0"	13'-6"
600S300-97	12	50	57'-7"	45'-9"	39'-11"	35'-9"	31'-2"	26'-4"	32'-5"	28'-4"	23'-11"	30'-1"	26'-4"	22'-2"	28'-4"	24'-9"	20'-11"	26'-11"	23'-6"	19'-10"	25'-9"	22'-6"	19'-0"
	16		52'-4"	41'-7"	36'-4"	32'-5"	28'-4"	23'-11"	29'-6"	25'-9"	21'-9"	27'-4"	23'-11"	20'-2"	25'-9"	22'-6"	19'-0"	24'-6"	21'-4"	18'-0"	23'-5"	20'-5"	17'-3"
	24		45'-9"	36'-4"	31'-8"	28'-4"	24'-9"	20'-11"	25'-9"	22'-6"	19'-0"	23'-11"	20'-11"	17'-7"	22'-6"	19'-8"	16'-7"	21'-4"	18'-8"	15'-9"	20'-5"	17'-10"	15'-1"
600S300-118	12	50	61'-4"	48'-8"	42'-6"	38'-0"	33'-2"	28'-0"	34'-6"	30'-2"	25'-5"	32'-1"	28'-0"	23'-7"	30'-2"	26'-4"	22'-3"	28'-8"	25'-0"	21'-1"	27'-5"	23'-11"	20'-2"
	16		55'-8"	44'-3"	38'-8"	34'-6"	30'-2"	25'-5"	31'-4"	27'-5"	23'-1"	29'-1"	25'-5"	21'-5"	27'-5"	23'-11"	20'-2"	26'-0"	22'-9"	19'-2"	24'-11"	21'-9"	18'-4"
	24		48'-8"	38'-8"	33'-9"	30'-2"	26'-4"	22'-3"	27'-5"	23'-11"	20'-2"	25'-5"	22'-3"	18'-9"	23'-11"	20'-11"	17'-8"	22'-9"	19'-10"	16'-9"	21'-9"	19'-0"	16'-0"
600S350-54	12	50	49'-11"	39'-7"	34'-7"	30'-11"	27'-0"	22'-9"	28'-1"	24'-6"	20'-8"	26'-1"	22'-9"	19'-3"	24'-6"	21'-5"	18'-1"	23'-4"	20'-4"	17'-2"	22'-4"	19'-6"	16'-5"
	16		45'-4"	36'-0"	31'-5"	28'-1"	24'-6"	20'-8"	25'-6"	22'-4"	18'-10"	23'-8"	20'-8"	17'-5"	22'-4"	19'-6"	16'-5"	21'-2"	18'-6"	15'-7"	20'-3"	17'-8"	14'-11"
	24		39'-7"	31'-5"	27'-5"	24'-6"	21'-5"	18'-1"	22'-4"	19'-6"	16'-5"	20'-8"	18'-1"	15'-3"	19'-6"e	17'-0"	14'-4"	18'-6"e	16'-2"e	13'-8"	17'-8"e	15'-6"e	13'-0"
600S350-68	12	50	54'-6"	43'-3"	37'-10"	33'-9"	29'-6"	24'-11"	30'-8"	26'-10"	22'-7"	28'-6"	24'-11"	21'-0"	26'-10"	23'-5"	19'-9"	25'-6"	22'-3"	18'-9"	24'-4"	21'-3"	17'-11"
	16		49'-6"	39'-4"	34'-4"	30'-8"	26'-10"	22'-7"	27'-11"	24'-4"	20'-7"	25'-11"	22'-7"	19'-1"	24'-4"	21'-3"	17'-11"	23'-2"	20'-3"	17'-1"	22'-2"	19'-4"	16'-4"
	24		43'-3"	34'-4"	30'-0"	26'-10"	23'-5"	19'-9"	24'-4"	21'-3"	17'-11"	22'-7"	19'-9"	16'-8"	21'-3"	18'-7"	15'-8"	20'-3"	17'-8"	14'-11"	19'-4"	16'-11"	14'-3"
600S350-97	12	50	60'-11"	48'-5"	42'-3"	37'-9"	33'-0"	27'-10"	34'-4"	30'-0"	25'-3"	31'-10"	27'-10"	23'-6"	30'-0"	26'-2"	22'-1"	28'-6"	24'-11"	21'-0"	27'-3"	23'-10"	20'-1"
	16		55'-5"	43'-11"	38'-5"	34'-4"	30'-0"	25'-3"	31'-2"	27'-3"	23'-0"	28'-11"	25'-3"	21'-4"	27'-3"	23'-10"	20'-1"	25'-11"	22'-7"	19'-1"	24'-9"	21'-7"	18'-3"
	24		48'-5"	38'-5"	33'-6"	30'-0"	26'-2"	22'-1"	27'-3"	23'-10"	20'-1"	25'-3"	22'-1"	18'-8"	23'-10"	20'-9"	17'-6"	22'-7"	19'-9"	16'-8"	21'-7"	18'-11"	15'-11"
600S350-118	12	50	64'-8"	51'-4"	44'-10"	40'-1"	35'-0"	29'-6"	36'-5"	31'-10"	26'-10"	33'-10"	29'-6"	24'-11"	31'-10"	27'-9"	23'-5"	30'-3"	26'-5"	22'-3"	28'-11"	25'-3"	21'-4"
	16		58'-9"	46'-8"	40'-9"	36'-5"	31'-10"	26'-10"	33'-1"	28'-11"	24'-5"	30'-9"	26'-10"	22'-8"	28'-11"	25'-3"	21'-4"	27'-5"	24'-0"	20'-3"	26'-3"	22'-11"	19'-4"
	24		51'-4"	40'-9"	35'-7"	31'-10"	27'-9"	23'-5"	28'-11"	25'-3"	21'-4"	26'-10"	23'-5"	19'-9"	25'-3"	22'-1"	18'-7"	24'-0"	20'-11"	17'-8"	22'-11"	20'-0"	16'-11"
800S137-331	12	33	36'-6"e	34'-0"e	29'-9"e	21'-1"e	21'-1"e	19'-7"e	18'-3"e	18'-3"e	17'-9"e	16'-4"e	16'-4"e	16'-4"e	14'-11"e	14'-11"e	14'-11"e	13'-10"e	13'-10"e	13'-10"e	12'-11"e	12'-11"e	12'-11"e
	16		31'-8"e	30'-11"e	27'-0"e	18'-3"e	18'-3"e	17'-9"e	15'-10"e	15'-10"e	15'-10"e	14'-2"e	14'-2"e	14'-2"e	12'-11"e	12'-11"e	12'-11"e	11'-11"e	11'-11"e	11'-11"e	11'-2"e	11'-2"e	11'-2"e
	24		25'-10"e	25'-10"e	23'-7"e	14'-11"e	14'-11"e	14'-11"e	12'-11"e	12'-11"e	12'-11"e	11'-7"e	11'-7"e	11'-7"e	10'-7"e	10'-7"e	10'-7"e	9'-9"e	9'-9"e	9'-9"e	9'-2"e	9'-2"e	9'-2"e
800S137-43	12	33	47'-2"	37'-5"	32'-9"	27'-9"e	25'-7"e	21'-7"	24'-0"e	23'-3"e	19'-7"e	21'-6"e	21'-6"e	18'-2"e	19'-7"e	19'-7"e	17'-1"e	18'-2"e	18'-2"e	16'-3"e	17'-0"e	17'-0"e	15'-6"e
	16		41'-7"	34'-0"	29'-9"	24'-0"e	23'-3"e	19'-7"e	20'-10"e	20'-10"e	17'-9"e	18'-7"e	18'-7"e	16'-6"e	17'-0"e	17'-0"e	15'-6"e	15'-9"e	15'-9"e	14'-9"e	14'-9"e	14'-9"e	14'-1"e
	24		34'-0"	29'-9"	26'-0"	19'-7"e	19'-7"e	17'-1"e	17'-0"e	17'-0"e	15'-6"e	15'-2"e	15'-2"e	14'-5"e	13'-10"e	13'-10"e	13'-7"e	12'-10"e	12'-10"e	12'-10"e	12'-0"e	12'-0"e	12'-0"e
800S137-54	12	33	51'-1"	40'-6"	35'-5"	31'-8"	27'-8"	23'-4"	27'-8"	25'-2"	21'-2"	24'-9"	23'-4"	19'-8"	22'-7"e	21'-11"e	18'-6"	20'-11"e	20'-10"e	17'-7"	19'-7"e	19'-7"e	16'-10"e
	16		46'-5"	36'-10"	32'-2"	27'-8"	25'-2"	21'-2"	24'-0"	22'-10"	19'-3"	21'-5"e	21'-2"e	17'-10"	19'-7"e	19'-7"e	16'-10"e	18'-1"e	18'-1"e	16'-0"e	16'-11"e	16'-11"e	15'-3"e
	24		39'-2"	32'-2"	28'-1"	22'-7"e	21'-11"e	18'-6"	19'-7"e	19'-7"e	16'-10"e	17'-6"e	17'-6"e	15'-7"e	16'-0"e	16'-0"e	14'-8"e	14'-10"e	14'-10"e	13'-11"e	13'-10"e	13'-10"e	13'-4"e
800S137-54	12	50	50'-9"	40'-3"	35'-2"	31'-5"	27'-6"	23'-2"	28'-7"	25'-0"	21'-1"	26'-6"	23'-2"	19'-7"	25'-0"	21'-10"	18'-5"	23'-9"	20'-9"	17'-6"	22'-8"	19'-10"	16'-9"
	16		46'-1"	36'-7"	32'-0"	28'-7"	25'-0"	21'-1"	26'-0"	22'-8"	19'-2"	24'-1"	21'-1"	17'-9"	22'-8"	19'-10"	16'-9"	21'-3"e	18'-10"	15'-10"	19'-11"e	18'-0"	15'-2"
	24		40'-3"	32'-0"	27'-11"	25'-0"	21'-10"	18'-5"	22'-8"	19'-10"	16'-9"	20'-7"e	18'-5"	15'-6"	18'-9"e	17'-4"e	14'-7"	17'-4"e	16'-5"e	13'-10"	16'-3"e	15'-9"e	13'-3"e
800S137-68	12	50	54'-10"	43'-6"	38'-0"	34'-0"	29'-8"	25'-1"	30'-11"	27'-0"	22'-9"	28'-8"	25'-1"	21'-1"	27'-0"	23'-7"	19'-11"	25'-8"	22'-5"	18'-11"	24'-6"	21'-5"	18'-1"
	16		49'-10"	39'-7"	34'-7"	30'-11"	27'-0"	22'-9"	28'-1"	24'-6"	20'-8"	26'-1"	22'-9"	19'-2"	24'-6"	21'-5"	18'-1"	23'-3"	20'-4"	17'-2"	22'-3"	19'-5"	16'-5"
	24		43'-6"	34'-7"	30'-2"	27'-0"	23'-7"	19'-11"	24'-6"	21'-5"	18'-1"	22'-9"	19'-11"	16'-9"	21'-5"	18'-8"	15'-9"	20'-4"	17'-9"	15'-0"	19'-0"	17'-0"	14'-4"
800S137-97	12	50	60'-10"	48'-4"	42'-2"	37'-9"	32'-11"	27'-10"	34'-3"	29'-11"	25'-3"	31'-10"	27'-10"	23'-5"	29'-11"	26'-2"	22'-1"	28'-5"	24'-10"	20'-11"	27'-2"	23'-9"	20'-1"
	16		55'-4"	43'-11"	38'-4"	34'-3"	29'-11"	25'-3"	31'-2"	27'-2"	22'-11"	28'-11"	25'-3"	21'-4"	27'-2"	23'-9"	20'-1"	25'-10"	22'-7"	19'-0"	24'-9"	21'-7"	18'-3"
	24		48'-4"	38'-4"	33'-6"	29'-11"	26'-2"	22'-1"	27'-2"	23'-9"	20'-1"	25'-3"	22'-1"	18'-7"	23'-9"	20'-9"	17'-6"	22'-7"	19'-9"	16'-8"	21'-7"	18'-10"	15'-11"
800S162-331	12	33	39'-1"e	35'-5"e	30'-11"e	22'-7"e	22'-7"e	20'-5"e	19'-6"e	19'-6"e	18'-6"e	17'-6"e	17'-6"e	17'-2"e	15'-11"e	15'-11"e	15'-11"e	14'-9"e	14'-9"e	14'-9"e	13'-10"e	13'-10"e	13'-10"e
	16		33'-10"e	32'-2"e	28'-1"e	19'-6"e	19'-6"e	18'-6"e	16'-11"e	16'-11"e	16'-10"e	15'-2"e	15'-2"e	15'-2"e	13'-10"e	13'-10"e	13'-10"e	12'-9"e	12'-9"e	12'-9"e	12'-0"e	12'-0"e	12'-0"e
	24		27'-8"e	27'-8"e	24'-7"e	15'-11"e	15'-11"e	15'-11"e	13'-10"e	13'-10"e	13'-10"e	12'-4"e	12'-4"e	12'-4"e	11'-3"e	11'-3"e	11'-3"e	10'-5"e	10'-5"e	10'-5"e	9'-6"e	9'-6"e	9'-6"e
800S162-43	12	33	49'-1"	38'-11"	34'-0"	29'-8"e	26'-7"e	22'-5"	25'-8"e	24'-2"e	20'-4"e	23'-0"e	22'-5"e	18'-11"e	21'-0"e	21'-0"e	17'-9"e	19'-5"e	19'-5"e	16'-11"e	18'-2"e	18'-2"e	16'-2"e
	16		44'-6"	35'-5"	30'-11"	25'-8"e	24'-2"e	20'-4"e	22'-3"e	21'-11"e	18'-6"e	19'-11"e	19'-11"e	17'-2"e	18'-2"e	18'-2"e	16'-2"e	16'-10"e	16'-10"e	15'-4"e	15'-9"e	15'-9"e	14'-8"e
	24		36'-4"	30'-11"	27'-0"	21'-0"e	21'-0"e	17'-9"e	18'-2"e	18'-2"e	16'-2"e	16'-3"e	16'-3"e	15'-0"e	14'-10"e	14'-10"e	14'-1"e	13'-9"e	13'-9"e	13'-5"e	12'-10"e	12'-10"e	12'-10"e
800S162-54	12	33	53'-1"	42'-2"	36'-10"	32'-11"	28'-9"	24'-3"	29'-6"	26'-1"	22'-0"	26'-4"e	24'-3"	20'-5"	24'-1"e	22'-10"e	19'-3"	22'-3"e	21'-8"e	18'-3"	20'-10"e	20'-9"e	17'-6"e
	16		48'-3"	38'-3"	33'-5"	29'-6"	26'-1"	22'-0"	25'-6"e	23'-9"	20'-0"	22'-10"e	22'-0"e	18'-7"	20'-10"e	20'-9"e	17'-6"e	19'-4"e	19'-4"e	16'-7"e	18'-1"e	18'-1"e	15'-11"e
	24		41'-8"	33'-5"	29'-3"	24'-1"e	22'-10"e	19'-3"	20'-10"e	20'-9"e	17'-6"e	18'-8"e	18'-8"e	16'-3"e	17'-0"e	17'-0"e	15'-3"e	15'-9"e	15'-9"e	14'-6"e	14'-9"e	14'-9"e	13'-11"e
800S162-54	12	50	52'-9"	41'-11"	36'-7"	32'-9"	28'-7"	24'-1"	29'-9"	26'-0"	21'-11"	27'-7"	24'-1"	20'-4"	26'-0"	22'-8"	19'-2"	24'-8"	21'-7"	18'-2"	23'-7"	20'-7"	17'-5"
	16		47'-11"	38'-1"	33'-3"	29'-9"	26'-0"	21'-11"	27'-0"	23'-7"	19'-11"	25'-1"	21'-11"	18'-6"	23'-7"	20'-7"	17'-5"	22'-5"e	19'-7"	16'-6"	21'-3"e	18'-9"e	15'-9"
	24		41'-11"	33'-3"	29'-1"	26'-0"	22'-8"	19'-2"	23'-7"	20'-7"	17'-5"	21'-11"e	19'-2"	16'-2"	20'-0"e	18'-0"e	15'-2"	18'-6"e	17'-1"e	14'-5"e	17'-4"e	16'-4"e	13'-10"e
800S162-68	12	50	57'-0"	45'-3"	39'-7"	35'-4"	30'-11"	26'-1"	32'-1"	28'-1"	23'-8"	29'-10"	26'-1"	22'-0"	28'-1"	24'-6"	20'-8"	26'-8"	23'-3"	19'-8"	25'-6"	22'-3"	18'-9"
	16		51'-10"	41'-2"	35'-11"	32'-1"	28'-1"	23'-8"	29'-2"	25'-6"	21'-6"	27'-1"	23'-8"	19'-11"	25'-6"	22'-3"	18'-9"	24'-3"	21'-2"	17'-10"	23'-2"	20'-3"	17'-1"
	24		45'-3"	35'-11"	31'-5"	28'-1"	24'-6"	20'-8"	25'-6"	22'-3"	18'-9"	23'-8"	20'-8"	17'-5"	22'-3"	19'-5"	16'-5"	21'-2"	18'-6"	15'-7"	20'-3"	17'-8"	14'-11"
800S162-97	12	50	63'-5"	50'-4"	43'-11"	39'-4"	34'-4"	28'-11"	35'-8"	31'-2"	26'-4"	33'-2"	28'-11"	24'-5"	31'-2"	27'-3"	23'-0"	29'-7"	25'-11"	21'-10"	28'-4"	24'-9"	20'-11"
	16		57'-7"	45'-9"	39'-11"	35'-8"	31'-2"	26'-4"	32'-5"	28'-4"	23'-11"	30'-1"	26'-4"	22'-2"	28'-4"	24'-9"	20'-11"	26'-11"	23'-6"	19'-10"	25'-9"	22'-6"	19'-0"
	24		50'-4"	39'-11"	34'-11"	31'-2"	27'-3"	23'-0"	28'-4"	24'-9"	20'-11"	26'-4"	23'-0"	19'-5"	24'-9"	21'-7"	18'-3"	23'-6"	20'-6"	17'-4"	22'-6"	19'-8"	16'-7"

See Curtain Wall Limiting Heights Table Notes

Wall Height

Stud Member	Spacing, in, oc	Fy, ksi	5 psf			15 psf			20 psf			25 psf			30 psf			35 psf			40 psf		
			L/120	L/240	L/360	L/240	L/360	L/600	L/240	L/360	L/600	L/240	L/360	L/600	L/240	L/360	L/600	L/240	L/360	L/600	L/240	L/360	L/600
800S162-118	12	50	67'-1"	53'-3"	46'-6"	41'-7"	36'-4"	30'-8"	37'-9"	33'-0"	27'-10"	35'-1"	30'-8"	25'-10"	33'-0"	28'-10"	24'-4"	31'-4"	27'-5"	23'-1"	30'-0"	26'-2"	22'-1"
	16		60'-11"	48'-4"	42'-3"	37'-9"	33'-0"	27'-10"	34'-4"	30'-0"	25'-3"	31'-10"	27'-10"	23'-6"	30'-0"	26'-2"	22'-1"	28'-6"	24'-11"	21'-0"	27'-3"	23'-10"	20'-1"
	24		53'-3"	42'-3"	36'-11"	33'-0"	28'-10"	24'-4"	30'-0"	26'-2"	22'-1"	27'-10"	24'-4"	20'-6"	26'-2"	22'-11"	19'-4"	24'-11"	21'-9"	18'-4"	23'-10"	20'-9"	17'-6"
800S200-331	12	33	41'-9"e	37'-9"e	33'-0"e	24'-1"e	24'-1"e	21'-8"e	20'-10"e	20'-10"e	19'-9"e	18'-8"e	18'-8"e	18'-4"e	17'-0"e	17'-0"e	17'-0"e	15'-9"e	15'-9"e	15'-9"e	14'-9"e	14'-9"e	14'-9"e
	16		36'-2"e	34'-3"e	29'-11"e	20'-10"e	20'-10"e	19'-9"e	18'-1"e	18'-1"e	17'-11"e	16'-2"e	16'-2"e	16'-2"e	14'-9"e	14'-9"e	14'-9"e	13'-8"e	13'-8"e	13'-8"e	12'-9"e	12'-9"e	12'-9"e
	24		29'-6"e	29'-6"e	26'-2"e	17'-0"e	17'-0"e	17'-0"e	14'-9"e	14'-9"e	14'-9"e	13'-2"e	13'-2"e	13'-2"e	12'-1"e	12'-1"e	12'-1"e	10'-10"e	10'-10"e	10'-10"e	9'-6"e	9'-6"e	9'-6"e
800S200-43	12	33	51'-10"	41'-1"	35'-11"	32'-1"e	28'-1"e	23'-8"	29'-2"e	25'-6"e	21'-6"e	26'-1"e	23'-8"e	19'-11"e	23'-9"e	22'-3"e	18'-9"e	22'-0"e	21'-2"e	17'-10"e	20'-7"e	20'-3"e	17'-1"e
	16		47'-1"	37'-4"	32'-8"	29'-2"e	25'-6"e	21'-6"e	25'-3"e	23'-2"e	19'-6"e	22'-7"e	21'-6"e	18'-2"e	20'-7"e	20'-3"e	17'-1"e	19'-1"e	19'-1"e	16'-2"e	17'-10"e	17'-10"e	15'-6"e
	24		41'-1"e	32'-8"	28'-6"	23'-9"e	22'-3"e	18'-9"e	20'-7"e	20'-3"e	17'-1"e	18'-5"e	18'-5"e	15'-10"e	16'-10"e	16'-10"e	14'-11"e	15'-7"e	15'-7"e	14'-2"e	14'-7"e	14'-7"e	13'-6"e
800S200-54	12	33	55'-8"	44'-2"	38'-7"	34'-6"	30'-2"	25'-5"	31'-4"	27'-5"	23'-1"	29'-1"e	25'-5"	21'-5"	27'-5"e	23'-11"e	20'-2"	26'-0"e	22'-9"e	19'-2"e	24'-5"e	21'-9"e	18'-4"e
	16		50'-7"	40'-2"	35'-1"	31'-4"	27'-5"	23'-1"	28'-6"e	24'-10"e	21'-0"	26'-5"e	23'-1"e	19'-6"	24'-5"e	21'-9"e	18'-4"e	22'-7"e	20'-8"e	17'-5"e	21'-1"e	19'-9"e	16'-8"e
	24		44'-2"	35'-1"	30'-8"	27'-5"e	23'-11"e	20'-2"	24'-5"e	21'-9"e	18'-4"e	21'-10"e	20'-2"e	17'-0"e	19'-11"e	19'-0"e	16'-0"e	18'-5"e	18'-0"e	15'-2"e	17'-3"e	17'-3"e	14'-7"e
800S200-54	12	50	55'-8"	44'-2"	38'-7"	34'-6"	30'-2"	25'-5"	31'-4"	27'-5"	23'-1"	29'-1"	25'-5"	21'-5"	27'-5"	23'-11"	20'-2"	26'-0"	22'-9"	19'-2"	24'-10"e	21'-9"	18'-4"
	16		50'-7"	40'-2"	35'-1"	31'-4"	27'-5"	23'-1"	28'-6"	24'-10"	21'-0"	26'-5"	23'-1"	19'-6"	24'-10"e	21'-9"	18'-4"	23'-8"e	20'-8"	17'-5"	22'-7"e	19'-9"e	16'-8"
	24		44'-2"	35'-1"	30'-8"	27'-5"	23'-11"	20'-2"	24'-10"e	21'-9"	18'-4"	23'-1"e	20'-2"e	17'-0"	21'-9"e	19'-0"e	16'-0"	20'-7"e	18'-0"e	15'-2"e	19'-3"e	17'-3"e	14'-7"e
800S200-68	12	50	59'-9"	47'-5"	41'-5"	37'-1"	32'-4"	27'-4"	33'-8"	29'-5"	24'-10"	31'-3"	27'-4"	23'-0"	29'-5"	25'-8"	21'-8"	27'-11"	24'-5"	20'-7"	26'-9"	23'-4"	19'-8"
	16		54'-4"	43'-1"	37'-8"	33'-8"	29'-5"	24'-10"	30'-7"	26'-9"	22'-6"	28'-5"	24'-10"	20'-11"	26'-9"	23'-4"	19'-8"	25'-4"	22'-2"	18'-8"	24'-3"	21'-2"	17'-11"
	24		47'-5"	37'-8"	32'-11"	29'-5"	25'-8"	21'-8"	26'-9"	23'-4"	19'-8"	24'-10"	21'-8"	18'-3"	23'-4"	20'-5"	17'-2"	22'-2"	19'-4"	16'-4"	21'-2"e	18'-6"	15'-7"
800S200-97	12	50	66'-6"	52'-9"	46'-1"	41'-2"	36'-0"	30'-4"	37'-5"	32'-8"	27'-7"	34'-9"	30'-4"	25'-7"	32'-8"	28'-7"	24'-1"	31'-1"	27'-2"	22'-11"	29'-9"	26'-0"	21'-11"
	16		60'-5"	47'-11"	41'-11"	37'-5"	32'-8"	27'-7"	34'-0"	29'-9"	25'-1"	31'-7"	27'-7"	23'-3"	29'-9"	26'-0"	21'-11"	28'-3"	24'-8"	20'-10"	27'-0"	23'-7"	19'-11"
	24		52'-9"	41'-11"	36'-7"	32'-8"	28'-7"	24'-1"	29'-9"	26'-0"	21'-11"	27'-7"	24'-1"	20'-4"	26'-0"	22'-8"	19'-2"	24'-8"	21'-6"	18'-2"	23'-7"	20'-7"	17'-5"
800S200-118	12	50	70'-5"	55'-11"	48'-10"	43'-8"	38'-2"	32'-2"	39'-8"	34'-8"	29'-3"	36'-10"	32'-2"	27'-2"	34'-8"	30'-3"	25'-6"	32'-11"	28'-9"	24'-3"	31'-6"	27'-6"	23'-2"
	16		64'-0"	50'-9"	44'-4"	39'-8"	34'-8"	29'-3"	36'-0"	31'-6"	26'-7"	33'-5"	29'-3"	24'-8"	31'-6"	27'-6"	23'-2"	29'-11"	26'-1"	22'-0"	28'-7"	25'-0"	21'-1"
	24		55'-11"	44'-4"	38'-9"	34'-8"	30'-3"	25'-6"	31'-6"	27'-6"	23'-2"	29'-3"	25'-6"	21'-6"	27'-6"	24'-0"	20'-3"	26'-1"	22'-10"	19'-3"	25'-0"	21'-10"	18'-5"
800S250-43	12	33	54'-0"	42'-11"	37'-6"	33'-6"e	29'-3"e	24'-8"	29'-2"e	26'-7"e	22'-5"e	26'-1"e	24'-8"e	20'-10"e	23'-10"e	23'-3"e	19'-7"e	22'-1"e	22'-1"e	18'-7"e	20'-8"e	20'-8"e	17'-10"e
	16		49'-1"	39'-0"	34'-0"	29'-2"e	26'-7"e	22'-5"e	25'-3"e	24'-2"e	20'-4"e	22'-7"e	22'-5"e	18'-11"e	20'-8"e	20'-8"e	17'-10"e	19'-1"e	19'-1"e	16'-11"e	17'-11"e	17'-11"e	16'-2"e
	24		41'-3"e	34'-0"	29'-9"	23'-10"e	23'-3"e	19'-7"e	20'-8"e	20'-8"e	17'-10"e	18'-6"e	18'-6"e	16'-6"e	16'-10"e	16'-10"e	15'-7"e	15'-7"e	15'-7"e	14'-9"e	14'-7"e	14'-7"e	14'-1"e
800S250-54	12	33	58'-1"	46'-1"	40'-3"	36'-0"	31'-5"	26'-6"	32'-8"e	28'-7"	24'-1"	29'-11"e	26'-6"e	22'-4"	27'-4"e	24'-11"e	21'-1"	25'-4"e	23'-8"e	20'-0"e	23'-8"e	22'-8"e	19'-1"e
	16		52'-9"	41'-10"	36'-7"	32'-8"e	28'-7"	24'-1"	29'-0"e	25'-11"e	21'-11"	25'-11"e	24'-1"e	20'-4"e	23'-8"e	22'-8"e	19'-1"e	21'-11"e	21'-6"e	18'-2"e	20'-6"e	20'-6"e	17'-4"e
	24		46'-1"	36'-7"	31'-11"	27'-4"e	24'-11"e	21'-1"	23'-8"e	22'-8"e	19'-1"e	21'-2"e	21'-1"e	17'-9"e	19'-4"e	19'-4"e	16'-8"e	17'-11"e	17'-11"e	15'-10"e	16'-9"e	16'-9"e	15'-2"e
800S250-54	12	50	57'-11"	45'-11"	40'-2"	35'-11"	31'-4"	26'-5"	32'-7"	28'-6"	24'-0"	30'-3"	26'-5"	22'-4"	28'-6"	24'-11"	21'-0"	27'-1"	23'-8"	19'-11"	25'-10"e	22'-7"	19'-1"
	16		52'-7"	41'-9"	36'-6"	32'-7"	28'-6"	24'-0"	29'-7"	25'-10"	21'-10"	27'-6"	24'-0"	20'-3"	25'-10"e	22'-7"	19'-1"	24'-7"e	21'-6"e	18'-1"	23'-6"e	20'-6"e	17'-4"
	24		45'-11"	36'-6"	31'-10"	28'-6"	24'-11"	21'-0"	25'-10"e	22'-7"	19'-1"	24'-0"e	21'-0"e	17'-8"	22'-3"e	19'-9"e	16'-8"e	20'-7"e	18'-9"e	15'-10"e	19'-3"e	17'-11"e	15'-2"e
800S250-68	12	50	62'-5"	49'-6"	43'-3"	38'-8"	33'-9"	28'-6"	35'-2"	30'-8"	25'-11"	32'-7"	28'-6"	24'-0"	30'-8"	26'-10"	22'-7"	29'-2"	25'-6"	21'-6"	27'-11"	24'-4"	20'-7"
	16		56'-8"	45'-0"	39'-4"	35'-2"	30'-8"	25'-11"	31'-11"	27'-11"	23'-6"	29'-8"	25'-11"	21'-10"	27'-11"	24'-4"	20'-7"	26'-6"	23'-2"	19'-6"	25'-4"	22'-2"	18'-8"
	24		49'-6"	39'-4"	34'-4"	30'-8"	26'-10"	22'-7"	27'-11"	24'-4"	20'-7"	25'-11"	22'-7"	19'-1"	24'-4"	21'-3"	17'-11"	23'-2"	20'-3"	17'-1"	22'-2"e	19'-4"	16'-4"
800S250-97	12	50	69'-6"	55'-2"	48'-2"	43'-1"	37'-7"	31'-9"	39'-2"	34'-2"	28'-10"	36'-4"	31'-9"	26'-9"	34'-2"	29'-10"	25'-2"	32'-6"	28'-4"	23'-11"	31'-1"	27'-2"	22'-11"
	16		63'-2"	50'-1"	43'-9"	39'-2"	34'-2"	28'-10"	35'-7"	31'-1"	26'-2"	33'-0"	28'-10"	24'-4"	31'-1"	27'-2"	22'-11"	29'-6"	25'-9"	21'-9"	28'-3"	24'-8"	20'-9"
	24		55'-2"	43'-9"	38'-3"	34'-2"	29'-10"	25'-2"	31'-1"	27'-2"	22'-11"	28'-10"	25'-2"	21'-3"	27'-2"	23'-8"	20'-0"	25'-9"	22'-6"	19'-0"	24'-8"	21'-6"	18'-2"
800S250-118	12	50	73'-8"	58'-6"	51'-1"	45'-8"	39'-11"	33'-8"	41'-6"	36'-3"	30'-7"	38'-6"	33'-8"	28'-5"	36'-3"	31'-8"	26'-8"	34'-5"	30'-1"	25'-4"	32'-11"	28'-9"	24'-3"
	16		66'-11"	53'-2"	46'-5"	41'-6"	36'-3"	30'-7"	37'-8"	32'-11"	27'-9"	35'-0"	30'-7"	25'-9"	32'-11"	28'-9"	24'-3"	31'-3"	27'-4"	23'-1"	29'-11"	26'-2"	22'-1"
	24		58'-6"	46'-5"	40'-7"	36'-3"	31'-8"	26'-8"	32'-11"	28'-9"	24'-3"	30'-7"	26'-8"	22'-6"	28'-9"	25'-2"	21'-2"	27'-4"	23'-10"	20'-2"	26'-2"	22'-10"	19'-3"
800S300-54	12	50	59'-2"	47'-0"	41'-0"	36'-8"	32'-1"	27'-0"	33'-4"	29'-1"	24'-7"	30'-11"	27'-0"	22'-10"	29'-1"	25'-5"	21'-5"	27'-8"	24'-2"	20'-5"	26'-5"e	23'-1"	19'-6"
	16		53'-9"	42'-8"	37'-3"	33'-4"	29'-1"	24'-7"	30'-3"	26'-5"	22'-4"	28'-1"	24'-7"	20'-9"	26'-5"e	23'-1"	19'-6"	25'-2"e	21'-11"e	18'-6"	23'-7"e	21'-0"e	17'-8"
	24		47'-0"	37'-3"	32'-7"	29'-1"	25'-5"	21'-5"	26'-5"e	23'-1"	19'-6"	24'-4"e	21'-5"e	18'-1"	22'-3"e	20'-2"e	17'-0"e	20'-7"e	19'-2"e	16'-2"e	19'-3"e	18'-4"e	15'-6"e
800S300-68	12	50	64'-3"	51'-0"	44'-7"	39'-10"	34'-10"	29'-4"	36'-2"	31'-7"	26'-8"	33'-7"	29'-4"	24'-9"	31'-7"	27'-7"	23'-4"	30'-0"	26'-3"	22'-2"	28'-9"	25'-1"	21'-2"
	16		58'-5"	46'-4"	40'-6"	36'-2"	31'-7"	26'-8"	32'-11"	28'-9"	24'-3"	30'-6"	26'-8"	22'-6"	28'-9"	25'-1"	21'-2"	27'-3"	23'-10"	20'-1"	26'-1"	22'-10"	19'-3"
	24		51'-0"	40'-6"	35'-4"	31'-7"	27'-7"	23'-4"	28'-9"	25'-1"	21'-2"	26'-8"	23'-4"	19'-8"	25'-1"	21'-11"	18'-6"	23'-10"	20'-10"	17'-7"	22'-10"e	19'-11"	16'-10"
800S300-97	12	50	71'-11"	57'-1"	49'-10"	44'-7"	38'-11"	32'-10"	40'-6"	35'-5"	29'-10"	37'-7"	32'-10"	27'-8"	35'-5"	30'-11"	26'-1"	33'-7"	29'-4"	24'-9"	32'-2"	28'-1"	23'-8"
	16		65'-4"	51'-10"	45'-4"	40'-6"	35'-5"	29'-10"	36'-10"	32'-2"	27'-1"	34'-2"	29'-10"	25'-2"	32'-2"	28'-1"	23'-8"	30'-6"	26'-8"	22'-6"	29'-2"	25'-6"	21'-6"
800S300-97	24	50	57'-1"	45'-4"	39'-7"	35'-5"	30'-11"	26'-1"	32'-2"	28'-1"	23'-8"	29'-10"	26'-1"	22'-0"	28'-1"	24'-6"	20'-8"	26'-8"	23'-4"	19'-8"	25'-6"	22'-3"	18'-10"
800S300-118	12	50	76'-8"	60'-10"	53'-2"	47'-6"	41'-6"	35'-0"	43'-2"	37'-8"	31'-10"	40'-1"	35'-0"	29'-6"	37'-8"	32'-11"	27'-9"	35'-10"	31'-3"	26'-5"	34'-3"	29'-11"	25'-3"
	16		69'-8"	55'-3"	48'-3"	43'-2"	37'-8"	31'-10"	39'-3"	34'-3"	28'-11"	36'-5"	31'-10"	26'-10"	34'-3"	29'-11"	25'-3"	32'-7"	28'-5"	24'-0"	31'-2"	27'-2"	22'-11"
	24		60'-10"	48'-3"	42'-2"	37'-8"	32'-11"	27'-9"	34'-3"	29'-11"	25'-3"	31'-10"	27'-9"	23'-5"	29'-11"	26'-2"	22'-1"	28'-5"	24'-10"	20'-11"	27'-2"	23'-9"	20'-0"
800S350-54	12	33	62'-11"	49'-11"	43'-7"	39'-0"	34'-1"	28'-9"	35'-5"e	30'-11"	26'-1"	32'-11"e	28'-9"e	24'-3"	30'-5"e	27'-0"e	22'-10"e	28'-2"e	25'-8"e	21'-8"e	26'-4"e	24'-7"e	20'-9"e
	16		57'-2"	45'-4"	39'-7"	35'-5"e	30'-11"	26'-1"	32'-2"e	28'-1"e	23'-9"	28'-11"e	26'-1"e	22'-0"e	26'-4"e	24'-7"e	20'-9"e	24'-5"e	23'-4"e	19'-8"e	22'-10"e	22'-4"e	18'-10"e
	24		49'-11"	39'-7"	34'-7"	30'-5"e	27'-0"e	22'-10"e	26'-4"e	24'-7"e	20'-9"e	23'-7"e	22'-10"e	19'-3"e	21'-6"e	21'-5"e	18'-1"e	19'-11"e	19'-11"e	17'-2"e	18'-8"e	18'-8"e	16'-5"e

See Curtain Wall Limiting Heights Table Notes

Wall Height

Stud Member	Spacing, in, oc	Fy, ksi	5 psf			15 psf			20 psf			25 psf			30 psf			35 psf			40 psf		
			L/120	L/240	L/360	L/240	L/360	L/600	L/240	L/360	L/600	L/240	L/360	L/600	L/240	L/360	L/600	L/240	L/360	L/600	L/240	L/360	L/600
800S350-54	12	50	62'-4"	49'-5"	43'-2"	38'-7"	33'-9"	28'-5"	35'-1"	30'-8"	25'-10"	32'-7"	28'-5"	24'-0"	30'-8"	26'-9"	22'-7"	29'-1"e	25'-5"	21'-5"	27'-10"e	24'-4"	20'-6"
	16		56'-7"	44'-11"	39'-3"	35'-1"	30'-8"	25'-10"	31'-10"	27'-10"	23'-6"	29'-7"	25'-10"	21'-10"	27'-10"e	24'-4"	20'-6"	26'-5"e	23'-1"e	19'-6"	25'-4"e	22'-1"e	18'-8"e
	24		49'-5"	39'-3"	34'-3"	30'-8"	26'-9"	22'-7"	27'-10"e	24'-4"	20'-6"	25'-10"e	22'-7"e	19'-1"	24'-4"e	21'-3"e	17'-11"e	22'-10"e	20'-2"e	17'-0"e	21'-4"e	19'-4"e	16'-3"e
800S350-68	12	50	67'-11"	53'-10"	47'-1"	42'-1"	36'-9"	31'-0"	38'-3"	33'-5"	28'-2"	35'-6"	31'-0"	26'-2"	33'-5"	29'-2"	24'-7"	31'-9"	27'-9"	23'-4"	30'-4"	26'-6"	22'-4"
	16		61'-8"	48'-11"	42'-9"	38'-3"	33'-5"	28'-2"	34'-9"	30'-4"	25'-7"	32'-3"	28'-2"	23'-9"	30'-4"	26'-6"	22'-4"	28'-10"	25'-2"	21'-3"	27'-7"	24'-1"	20'-4"
	24		53'-10"	42'-9"	37'-4"	33'-5"	29'-2"	24'-7"	30'-4"	26'-6"	22'-4"	28'-2"	24'-7"	20'-9"	26'-6"	23'-2"	19'-6"	25'-2"e	22'-0"	18'-7"	24'-1"e	21'-0"	17'-9"
800S350-97	12	50	76'-0"	60'-4"	52'-8"	47'-1"	41'-2"	34'-8"	42'-10"	37'-5"	31'-6"	39'-9"	34'-8"	29'-3"	37'-5"	32'-8"	27'-7"	35'-6"	31'-0"	26'-2"	34'-0"	29'-8"	25'-0"
	16		69'-1"	54'-10"	47'-11"	42'-10"	37'-5"	31'-6"	38'-11"	34'-0"	28'-8"	36'-1"	31'-6"	26'-7"	34'-0"	29'-8"	25'-0"	32'-3"	28'-2"	23'-9"	30'-10"	27'-0"	22'-9"
	24		60'-4"	47'-11"	41'-10"	37'-5"	32'-8"	27'-7"	34'-0"	29'-8"	25'-0"	31'-6"	27'-7"	23'-3"	29'-8"	25'-11"	21'-10"	28'-2"	24'-7"	20'-9"	27'-0"	23'-7"	19'-10"
800S350-118	12	50	80'-8"	64'-1"	56'-0"	50'-0"	43'-8"	36'-10"	45'-5"	39'-8"	33'-6"	42'-2"	36'-10"	31'-1"	39'-8"	34'-8"	29'-3"	37'-9"	32'-11"	27'-9"	36'-1"	31'-6"	26'-7"
	16		73'-4"	58'-2"	50'-10"	45'-5"	39'-8"	33'-6"	41'-4"	36'-1"	30'-5"	38'-4"	33'-6"	28'-3"	36'-1"	31'-6"	26'-7"	34'-3"	29'-11"	25'-3"	32'-9"	28'-8"	24'-2"
	24		64'-1"	50'-10"	44'-5"	39'-8"	34'-8"	29'-3"	36'-1"	31'-6"	26'-7"	33'-6"	29'-3"	24'-8"	31'-6"	27'-6"	23'-3"	29'-11"	26'-2"	22'-1"	28'-8"	25'-0"	21'-1"

See Curtain Wall Limiting Heights Table Notes



Combined Axial and Lateral Load Tables

Combined Axial and Lateral Load Table Notes

1. Allowable axial loads listed in kips (1 kip = 1000 pounds).
2. Allowable axial loads determined in accordance with AISI S240-20, assuming that all axial loads pass through the geometric center of the section.
3. Listed lateral pressures and axial loads have not been modified for load combinations or allowable stress increases based on wind/earthquake or multiple transient loads.
4. Allowable axial loads based on lateral and torsional bracing at a maximum spacing of 4 feet on center.
5. The 5 psf live load has not been reduced for deflection checks. For 15 psf or higher wind pressure, read the note below.

   IBC 2021/ASCE 7-16: Due to the change in the model building codes, design wind pressures determined using IBC 2021/ASCE 7-16 or later are strength level loads (LRFD) in comparison to those determined in some earlier IBC codes which were service level loads (ASD). The load/span tables that follow are based on service level (ASD) wind loads. Therefore, to properly use the load/span tables in this catalog, multiply the IBC 2021/ASCE 7-16 design wind pressures by 0.6 (Reference Section 2.4 ASCE 7-16) prior to entering the load/span tables.

   Example:
   - ASCE 7-16 Calculated Design Wind Pressure = 25 psf (Strength level loads, LRFD)
   - Convert to service level loads (ASD) = 25 psf x 0.6 = 15 psf
   - Use 15 psf as the Pressure Value used in this Table to determine the member span

   Any Other Building Code: The load/span tables that follow are based on service level (ASD) wind loads. If the wind load being used meets this criterion, it does not need to be modified prior to using the tables.
6. Studs are assumed to be adequately braced at a maximum spacing of Lu to develop full allowable moment, Ma.
7. End supports have not been checked for web crippling. Refer web crippling capacity tables.
8. All tables are based on simple (single) span.
9. Cells marked with an " * " have h/t>200, thus require bearing stiffeners. Cells are left blank when h/t>260.
10. Cells marked with an a, b, c, d, e or f meets L/720, L/600, L/480, L/360, L/240, or L/120 respectively. Blank cells do not meet L/120.
11. Stud distortional buckling moment based on assumed Kφ = 0
12. Moment of inertia for deflection is optimized based on the maximum moment at service loads for the listed spans; therefore span values may be greater than spans based on effective moment of inertia listed in section property tables

5 psf Lateral Load (Interior Walls Only)

Wall Height (ft)	Spacing (in.) o.c.	362S137-(mils)				362S162-(mils)					362S200-(mils)					362S250-(mils)			
		33 ksi		50 ksi		33 ksi		50 ksi			33 ksi		50 ksi			33 ksi	50 ksi		
		33	43	54	68	33	43	54	68	97	97	33	54	68	97	43	54	68	97
8	12	1.46 a	2.08 a	3.11 a	4.05 a	1.86 a	2.52 a	3.98 a	5.11 a	7.48 a	2.26 a	3.26 a	5.05 a	7.99 a	9.2 a	3.72 a	5.74 a	7.52 a	10.57 a
	16	1.4 a	2.02 a	3.07 a	4.01 a	1.8 a	2.46 a	3.93 a	5.07 a	7.43 a	2.2 a	3.2 a	5 a	7.92 a	9.15 a	3.65 a	5.68 a	7.46 a	10.51 a
	24	1.29 a	1.91 a	2.98 a	3.93 a	1.68 a	2.35 a	3.84 a	4.98 a	7.35 a	2.06 a	3.07 a	4.88 a	7.79 a	9.06 a	3.51 a	5.55 a	7.34 a	10.41 a
9	12	1.38 a	1.98 a	2.93 a	3.82 a	1.75 a	2.38 a	3.74 a	4.78 a	6.97 a	2.14 a	3.09 a	4.72 a	7.48 a	8.54 a	3.56 a	5.44 a	7 a	9.83 a
	16	1.31 a	1.91 a	2.88 a	3.78 a	1.68 a	2.31 a	3.68 a	4.73 a	6.92 a	2.06 a	3.01 a	4.65 a	7.4 a	8.49 a	3.47 a	5.36 a	6.93 a	9.77 a
	24	1.17 a	1.78 a	2.77 a	3.68 a	1.53 a	2.17 a	3.56 a	4.63 a	6.81 a	1.9 a	2.85 a	4.52 a	7.24 a	8.38 a	3.3 a	5.22 a	6.79 a	9.64 a
10	12	1.28 a	1.87 a	2.72 a	3.55 a	1.63 a	2.09 a	3.47 a	4.42 a	6.41 a	2.01 a	2.9 a	4.35 a	6.88 a	7.83 a	3.38 a	5.1 a	6.43 a	9.05 a
	16	1.2 a	1.79 a	2.66 a	3.5 a	1.54 a	2.02 a	3.4 a	4.36 a	6.35 a	1.91 a	2.81 a	4.27 a	6.79 a	7.77 a	3.28 a	5.01 a	6.35 a	8.97 a
	24	1.04 a	1.62 a	2.54 a	3.39 a	1.37 a	1.86 a	3.26 a	4.24 a	6.23 a	1.72 a	2.62 a	4.12 a	6.61 a	7.64 a	3.08 a	4.84 a	6.2 a	8.83 a
12	12	1.08 a	1.6 a	2.29 a	2.98 a	1.37 a	1.99 a	2.84 a	3.62 a	5.2 a	1.71 a	2.48 a	3.54 a	5.58 a	6.33 a	2.91 a	4.17 a	5.25 a	7.39 a
	16	0.97 b	1.5 a	2.21 a	2.91 a	1.25 a	1.88 a	2.76 a	3.55 a	5.13 a	1.59 a	2.36 a	3.45 a	5.48 a	6.26 a	2.78 a	4.07 a	5.16 a	7.3 a
	24	0.76 d	1.28 c	2.05 b	2.78 a	1.03 c	1.66 b	2.59 a	3.41 a	4.99 a	1.33 c	2.13 a	3.27 a	5.27 a	6.11 a	2.52 a	3.86 a	4.97 a	7.13 a
14	12	0.85 c	1.31 b	1.86 a	2.43 a	1.09 b	1.63 a	2.28 a	2.93 a	4.17 a	1.38 a	2.05 a	2.82 a	4.45 a	5.08 a	2.42 a	3.33 a	4.22 a	5.95 a
	16	0.72 d	1.18 c	1.77 b	2.36 a	0.95 d	1.5 b	2.19 a	2.85 a	4.09 a	1.23 c	1.91 b	2.72 a	4.33 a	4.99 a	2.26 a	3.22 a	4.11 a	5.86 a
	24	0.47 e	0.93 e	1.59 d	2.21 c	0.69 e	1.23 d	2 c	2.68 b	3.93 a	0.93 d	1.63 d	2.52 c	4.1 a	4.83 a	1.95 c	2.99 b	3.9 a	5.66 a
16	12	0.63 d	1.01 d	1.49 c	1.96 b	0.82 d	1.28 c	1.82 b	2.35 a	3.35 a	1.05 c	1.62 b	2.25 a	3.56 a	4.09 a	1.93 a	2.66 a	3.4 a	4.82 a
	16	0.49 e	0.87 e	1.39 d	1.88 c	0.67 e	1.13 d	1.72 c	2.27 b	3.26 a	0.88 d	1.47 c	2.14 c	3.43 a	4 a	1.76 c	2.54 b	3.28 a	4.72 a
	24	0.2 f	0.59 f	1.2 e	1.72 e	0.37 f	0.84 e	1.52 e	2.09 d	3.1 c	0.55 e	1.16 e	1.92 d	3.18 c	3.83 b	1.41 d	2.29 d	3.06 c	4.51 a

5 psf Lateral Load (Interior Walls Only)

Wall Height (ft)	Spacing (in.) o.c.	362S300-(mils)			600S137-(mils)					600S162-(mils)					
		50 ksi			33 ksi		50 ksi			33 ksi		50 ksi			
		54	68	97	33	43	54	68	97	33	43	54	68	97	118
8	12	5.79 a	8.01 a	11.82 a	1.77 a	2.51 a	3.8 a	5.03 a	7.52 a	2.44 a	3.4 a	5.59 a	7.42 a	11.35 a	14.19 a
	16	5.73 a	7.95 a	11.76 a	1.74 a	2.47 a	3.77 a	5 a	7.5 a	2.4 a	3.37 a	5.56 a	7.39 a	11.32 a	14.16 a
	24	5.61 a	7.83 a	11.65 a	1.67 a	2.41 a	3.71 a	4.95 a	7.45 a	2.33 a	3.3 a	5.49 a	7.33 a	11.25 a	14.09 a
9	12	5.49 a	7.51 a	11.15 a	1.75 a	2.48 a	3.77 a	5 a	7.5 a	2.4 a	3.37 a	5.57 a	7.4 a	11.32 a	14.17 a
	16	5.42 a	7.44 a	11.09 a	1.7 a	2.44 a	3.74 a	4.97 a	7.47 a	2.35 a	3.33 a	5.52 a	7.36 a	11.28 a	14.13 a
	24	5.28 a	7.29 a	10.96 a	1.61 a	2.36 a	3.67 a	4.9 a	7.41 a	2.26 a	3.24 a	5.44 a	7.28 a	11.2 a	14.04 a
10	12	5.17 a	6.99 a	10.28 a	1.71 a	2.45 a	3.75 a	4.98 a	7.48 a	2.35 a	3.32 a	5.52 a	7.37 a	11.29 a	14.14 a
	16	5.09 a	6.9 a	10.21 a	1.66 a	2.4 a	3.71 a	4.94 a	7.44 a	2.29 a	3.27 a	5.47 a	7.32 a	11.24 a	14.09 a
	24	4.92 a	6.74 a	10.06 a	1.55 a	2.3 a	3.62 a	4.86 a	7.37 a	2.18 a	3.16 a	5.37 a	7.22 a	11.14 a	13.98 a
12	12	4.55 a	5.93 a	8.45 a	1.64 a	2.38 a	3.69 a	4.93 a	7.43 a	2.23 a	3.18 a	5.29 a	7.16 a	11.23 a	14.07 a
	16	4.44 a	5.83 a	8.36 a	1.57 a	2.31 a	3.63 a	4.87 a	7.38 a	2.15 a	3.11 a	5.22 a	7.09 a	11.15 a	13.99 a
	24	4.22 a	5.62 a	8.18 a	1.41 a	2.16 a	3.51 a	4.75 a	7.27 a	1.99 a	2.96 a	5.07 a	6.96 a	11.01 a	13.84 a
14	12	3.8 a	4.85 a	6.85 a	1.56 a	2.3 a	3.63 a	4.86 a	7.37 a	2.07 a	3 a	4.96 a	6.75 a	10.8 a	13.99 a
	16	3.68 a	4.73 a	6.75 a	1.45 a	2.2 a	3.55 a	4.78 a	7.3 a	1.97 a	2.9 a	4.87 a	6.66 a	10.7 a	13.89 a
	24	3.42 a	4.5 a	6.54 a	1.24 a	2 a	3.38 a	4.62 a	7.15 a	1.76 a	2.71 a	4.68 a	6.49 a	10.51 a	13.68 a
16	12	3.07 a	3.92 a	5.58 a	1.45 a	2.2 a	3.55 a	4.79 a	7.3 a	1.89 a	2.78 a	4.54 a	6.22 a	9.94 a	12.85 a
	16	2.93 a	3.79 a	5.47 a	1.31 a	2.07 a	3.44 a	4.68 a	7.21 a	1.76 a	2.66 a	4.43 a	6.11 a	9.82 a	12.72 a
	24	2.66 c	3.54 b	5.25 a	1.04 c	1.81 a	3.23 a	4.47 a	7.02 a	1.5 b	2.41 a	4.21 a	5.89 a	9.59 a	12.48 a

See Combined Axial and Lateral Load Table Notes

5 psf Lateral Load (Interior Walls Only)

Wall Height (ft)	Spacing (in.) o.c.	600S200-(mils)						600S250-(mils)					600S300-(mils)				600S350-(mils)			
		33 ksi		50 ksi				33 ksi	50 ksi				50 ksi				50 ksi			
		33	43	54	68	97	118	43	54	68	97	118	54	68	97	118	54	68	97	118
8	12	2.86 a	4.29 a	7.35 a	9.77 a	15.24 a	19.54 a	4.65 a	7.59 a	10.93 a	17.91 a	22.79 a	7.9 a	11.11 a	19.22 a	24.9 a	10.21 a	14.72 a	23.85 a	31.42 a
	16	2.82 a	4.25 a	7.31 a	9.73 a	15.2 a	19.5 a	4.61 a	7.55 a	10.88 a	17.86 a	22.75 a	7.86 a	11.07 a	19.17 a	24.85 a	10.17 a	14.68 a	23.8 a	31.36 a
	24	2.74 a	4.17 a	7.23 a	9.65 a	15.12 a	19.42 a	4.52 a	7.48 a	10.8 a	17.77 a	22.65 a	7.78 a	10.98 a	19.08 a	24.76 a	10.09 a	14.59 a	23.7 a	31.26 a
9	12	2.81 a	4.22 a	7.22 a	9.62 a	15.01 a	19.25 a	4.58 a	7.47 a	10.74 a	17.58 a	22.38 a	7.78 a	10.93 a	18.86 a	24.47 a	10.03 a	14.47 a	23.44 a	30.71 a
	16	2.76 a	4.17 a	7.18 a	9.57 a	14.96 a	19.2 a	4.53 a	7.42 a	10.69 a	17.52 a	22.32 a	7.73 a	10.88 a	18.81 a	24.41 a	9.98 a	14.42 a	23.38 a	30.64 a
	24	2.66 a	4.06 a	7.08 a	9.47 a	14.87 a	19.1 a	4.42 a	7.33 a	10.58 a	17.41 a	22.21 a	7.63 a	10.77 a	18.69 a	24.29 a	9.87 a	14.31 a	23.25 a	30.52 a
10	12	2.75 a	4.14 a	7.07 a	9.43 a	14.73 a	18.9 a	4.5 a	7.33 a	10.53 a	17.2 a	21.89 a	7.63 a	10.72 a	18.45 a	23.97 a	9.82 a	14.19 a	22.97 a	29.9 a
	16	2.69 a	4.07 a	7.01 a	9.37 a	14.67 a	18.83 a	4.44 a	7.27 a	10.46 a	17.13 a	21.82 a	7.57 a	10.66 a	18.38 a	23.89 a	9.75 a	14.12 a	22.9 a	29.82 a
	24	2.57 a	3.95 a	6.89 a	9.25 a	14.56 a	18.71 a	4.31 a	7.15 a	10.33 a	16.99 a	21.68 a	7.45 a	10.53 a	18.24 a	23.75 a	9.63 a	13.98 a	22.75 a	29.67 a
12	12	2.61 a	3.94 a	6.69 a	8.94 a	14 a	17.95 a	4.31 a	6.98 a	10.01 a	16.23 a	20.67 a	7.27 a	10.27 a	17.45 a	22.79 a	9.32 a	13.52 a	21.92 a	28.01 a
	16	2.53 a	3.85 a	6.6 a	8.86 a	13.92 a	17.87 a	4.22 a	6.9 a	9.92 a	16.14 a	20.57 a	7.19 a	10.19 a	17.36 a	22.69 a	9.24 a	13.42 a	21.82 a	27.9 a
	24	2.36 a	3.67 a	6.44 a	8.69 a	13.76 a	17.7 a	4.03 a	6.74 a	9.74 a	15.94 a	20.37 a	7.02 a	10.01 a	17.17 a	22.49 a	9.06 a	13.23 a	21.61 a	27.7 a
14	12	2.44 a	3.68 a	6.19 a	8.3 a	13.04 a	16.69 a	4.08 a	6.6 a	9.38 a	15.04 a	19.14 a	6.84 a	9.74 a	16.28 a	21.48 a	8.75 a	12.73 a	20.52 a	25.83 a
	16	2.32 a	3.57 a	6.08 a	8.19 a	12.94 a	16.59 a	3.95 a	6.49 a	9.27 a	14.92 a	19.01 a	6.73 a	9.63 a	16.16 a	21.35 a	8.63 a	12.6 a	20.38 a	25.7 a
	24	2.1 a	3.34 a	5.87 a	7.98 a	12.73 a	16.37 a	3.71 a	6.28 a	9.03 a	14.67 a	18.76 a	6.51 a	9.39 a	15.92 a	21.09 a	8.41 a	12.36 a	20.12 a	25.44 a
16	12	2.23 a	3.38 a	5.6 a	7.55 a	11.89 a	15.19 a	3.8 a	6.21 a	8.7 a	13.68 a	17.4 a	6.34 a	9.14 a	15.01 a	19.59 a	8.1 a	11.84 a	18.64 a	23.47 a
	16	2.09 a	3.24 a	5.47 a	7.42 a	11.76 a	15.06 a	3.65 a	6.08 a	8.56 a	13.54 a	17.25 a	6.21 a	8.99 a	14.87 a	19.44 a	7.96 a	11.69 a	18.48 a	23.31 a
	24	1.81 a	2.96 a	5.22 a	7.16 a	11.52 a	14.81 a	3.35 a	5.81 a	8.28 a	13.24 a	16.95 a	5.94 a	8.71 a	14.57 a	19.13 a	7.69 a	11.39 a	18.17 a	23 a

5 psf Lateral Load (Interior Walls Only)

Wall Height (ft)	Spacing (in.) o.c.	800S137-(mils)					800S162-(mils)						800S200-(mils)					
		33 ksi		50 ksi			33 ksi		50 ksi				33 ksi		50 ksi			
		33	43	54	68	97	33	43	54	68	97	118	33	43	54	68	97	118
8	12	1.7 a*	2.43 a	3.56 a	4.73 a	7.23 a	2.38 a*	3.35 a	5.42 a	7.23 a	11.25 a	14.31 a	2.95 a*	4.49 a	7.74 a	10.27 a	15.96 a	20.43 a
	16	1.67 a*	2.4 a	3.54 a	4.72 a	7.21 a	2.35 a*	3.33 a	5.4 a	7.21 a	11.23 a	14.29 a	2.92 a*	4.46 a	7.72 a	10.24 a	15.93 a	20.41 a
	24	1.62 a*	2.36 a	3.5 a	4.68 a	7.18 a	2.28 a*	3.27 a	5.35 a	7.16 a	11.18 a	14.24 a	2.84 a*	4.4 a	7.66 a	10.19 a	15.88 a	20.35 a
9	12	1.68 a*	2.41 a	3.54 a	4.72 a	7.22 a	2.35 a*	3.33 a	5.4 a	7.21 a	11.23 a	14.29 a	2.92 a*	4.46 a	7.72 a	10.25 a	15.93 a	20.41 a
	16	1.64 a*	2.38 a	3.52 a	4.7 a	7.2 a	2.31 a*	3.3 a	5.37 a	7.18 a	11.2 a	14.26 a	2.88 a*	4.43 a	7.69 a	10.21 a	15.9 a	20.38 a
	24	1.57 a*	2.32 a	3.47 a	4.65 a	7.16 a	2.22 a*	3.23 a	5.31 a	7.12 a	11.15 a	14.21 a	2.78 a*	4.35 a	7.61 a	10.14 a	15.83 a	20.31 a
10	12	1.65 a*	2.39 a	3.53 a	4.7 a	7.2 a	2.32 a*	3.31 a	5.38 a	7.19 a	11.21 a	14.27 a	2.89 a*	4.44 a	7.7 a	10.22 a	15.91 a	20.39 a
	16	1.61 a*	2.35 a	3.5 a	4.68 a	7.18 a	2.27 a*	3.26 a	5.34 a	7.15 a	11.18 a	14.24 a	2.83 a*	4.39 a	7.65 a	10.18 a	15.87 a	20.34 a
	24	1.52 a*	2.28 a	3.44 a	4.62 a	7.13 a	2.16 a*	3.18 a	5.27 a	7.08 a	11.11 a	14.17 a	2.71 a*	4.3 a	7.56 a	10.09 a	15.79 a	20.26 a
12	12	1.59 a*	2.34 a	3.49 a	4.67 a	7.17 a	2.25 a*	3.25 a	5.33 a	7.14 a	11.17 a	14.23 a	2.8 a*	4.37 a	7.63 a	10.17 a	15.86 a	20.33 a
	16	1.53 a*	2.29 a	3.45 a	4.63 a	7.13 a	2.17 a*	3.19 a	5.28 a	7.09 a	11.12 a	14.18 a	2.72 a*	4.3 a	7.57 a	10.1 a	15.8 a	20.27 a
	24	1.4 a*	2.18 a	3.37 a	4.55 a	7.06 a	2.02 a*	3.06 a	5.17 a	6.98 a	11.02 a	14.08 a	2.55 a*	4.17 a	7.44 a	9.98 a	15.68 a	20.14 a
14	12	1.52 a*	2.28 a	3.44 a	4.62 a	7.13 a	2.17 a*	3.18 a	5.27 a	7.08 a	11.11 a	14.17 a	2.68 a*	4.23 a	7.39 a	9.91 a	15.7 a	20.26 a
	16	1.44 a*	2.21 a	3.39 a	4.57 a	7.08 a	2.06 a*	3.1 a	5.2 a	7.01 a	11.04 a	14.11 a	2.57 a*	4.14 a	7.3 a	9.83 a	15.62 a	20.18 a
	24	1.26 a*	2.07 a	3.28 a	4.46 a	6.98 a	1.85 a*	2.93 a	5.05 a	6.87 a	10.91 a	13.97 a	2.34 a*	3.97 a	7.14 a	9.66 a	15.46 a	20.01 a
16	12	1.44 a*	2.22 a	3.39 a	4.57 a	7.09 a	2.07 a*	3.1 a	5.2 a	7.02 a	11.05 a	14.11 a	2.53 a*	4.05 a	7.05 a	9.49 a	15.09 a	19.6 a
	16	1.33 a*	2.13 a	3.32 a	4.5 a	7.02 a	1.93 a*	2.99 a	5.11 a	6.92 a	10.96 a	14.02 a	2.38 a*	3.94 a	6.95 a	9.39 a	14.99 a	19.49 a
	24	1.1 a*	1.94 a	3.17 a	4.36 a	6.9 a	1.65 a*	2.77 a	4.91 a	6.73 a	10.79 a	13.85 a	2.09 a*	3.72 a	6.73 a	9.18 a	14.78 a	19.28 a

See Combined Axial and Lateral Load Table Notes

5 psf Lateral Load (Interior Walls Only)

Wall Height (ft)	Spacing (in.) o.c.	800S250-(mils)					800S300-(mils)				800S350-(mils)			
		33 ksi	50 ksi				50 ksi				50 ksi			
		43	54	68	97	118	54	68	97	118	54	68	97	118
8	12	4.89 a	8.13 a	11.73 a	19.55 a	25.43 a	8.48 a	12 a	21.32 a	27.8 a	10.93 a	15.73 a	25.86 a	34.32 a
	16	4.86 a	8.1 a	11.7 a	19.52 a	25.4 a	8.45 a	11.97 a	21.28 a	27.76 a	10.9 a	15.7 a	25.83 a	34.28 a
	24	4.8 a	8.04 a	11.64 a	19.45 a	25.33 a	8.39 a	11.91 a	21.21 a	27.69 a	10.84 a	15.64 a	25.75 a	34.2 a
9	12	4.85 a	8.07 a	11.67 a	19.45 a	25.26 a	8.41 a	11.92 a	21.14 a	27.58 a	10.83 a	15.61 a	25.7 a	34.05 a
	16	4.82 a	8.03 a	11.63 a	19.4 a	25.22 a	8.37 a	11.88 a	21.1 a	27.54 a	10.79 a	15.57 a	25.65 a	34 a
	24	4.74 a	7.96 a	11.55 a	19.32 a	25.13 a	8.3 a	11.8 a	21.01 a	27.45 a	10.71 a	15.48 a	25.56 a	33.91 a
10	12	4.81 a	8 a	11.59 a	19.32 a	25.05 a	8.33 a	11.81 a	20.93 a	27.32 a	10.71 a	15.46 a	25.46 a	33.74 a
	16	4.76 a	7.96 a	11.54 a	19.27 a	25 a	8.28 a	11.76 a	20.88 a	27.27 a	10.66 a	15.41 a	25.4 a	33.68 a
	24	4.66 a	7.86 a	11.45 a	19.16 a	24.89 a	8.19 a	11.67 a	20.77 a	27.16 a	10.56 a	15.31 a	25.29 a	33.57 a
12	12	4.7 a	7.82 a	11.38 a	18.99 a	24.47 a	8.13 a	11.53 a	20.37 a	26.64 a	10.41 a	15.09 a	24.78 a	32.99 a
	16	4.63 a	7.76 a	11.32 a	18.92 a	24.39 a	8.06 a	11.47 a	20.3 a	26.56 a	10.34 a	15.02 a	24.7 a	32.91 a
	24	4.49 a	7.63 a	11.18 a	18.77 a	24.24 a	7.92 a	11.33 a	20.14 a	26.4 a	10.2 a	14.87 a	24.54 a	32.74 a
14	12	4.56 a	7.58 a	11.02 a	18.34 a	23.64 a	7.86 a	11.17 a	19.63 a	25.73 a	10.04 a	14.6 a	23.95 a	31.77 a
	16	4.46 a	7.49 a	10.93 a	18.24 a	23.54 a	7.77 a	11.08 a	19.53 a	25.63 a	9.95 a	14.51 a	23.84 a	31.66 a
	24	4.28 a	7.32 a	10.75 a	18.05 a	23.33 a	7.59 a	10.91 a	19.33 a	25.42 a	9.77 a	14.32 a	23.63 a	31.44 a
16	12	4.38 a	7.26 a	10.54 a	17.48 a	22.56 a	7.53 a	10.72 a	18.72 a	24.64 a	9.61 a	14.03 a	23.01 a	30.13 a
	16	4.26 a	7.15 a	10.43 a	17.36 a	22.43 a	7.42 a	10.61 a	18.6 a	24.51 a	9.5 a	13.91 a	22.88 a	30 a
	24	4.03 a	6.94 a	10.2 a	17.11 a	22.17 a	7.19 a	10.39 a	18.35 a	24.25 a	9.26 a	13.67 a	22.61 a	29.73 a

See Combined Axial and Lateral Load Table Notes



15 psf Lateral Load

Wall Height (ft)	Spacing (in.) o.c.	362S137-(mils)				362S162-(mils)					362S200-(mils)					362S250-(mils)			
		33 ksi		50 ksi		33 ksi		50 ksi			33 ksi		50 ksi			33 ksi	50 ksi		
		33	43	54	68	33	43	54	68	97	97	33	54	68	97	43	54	68	97
8	12	1.13 a	1.75 a	2.85 a	3.82 a	1.5 a	2.18 a	3.69 a	4.85 a	7.21 a	1.87 a	2.88 a	4.72 a	7.6 a	8.92 a	3.3 a	5.37 a	7.17 a	10.24 a
	16	0.96 a	1.58 a	2.71 a	3.7 a	1.32 a	2 a	3.54 a	4.72 a	7.08 a	1.67 a	2.69 a	4.55 a	7.4 a	8.78 a	3.09 a	5.19 a	6.99 a	10.08 a
	24	0.63 b	1.25 a	2.45 a	3.47 a	0.96 a	1.66 a	3.25 a	4.45 a	6.82 a	1.27 a	2.3 a	4.22 a	7.01 a	8.5 a	2.68 a	4.83 a	6.64 a	9.76 a
9	12	0.97 a	1.57 a	2.61 a	3.54 a	1.31 a	1.96 a	3.39 a	4.47 a	6.66 a	1.65 a	2.62 a	4.32 a	7.01 a	8.21 a	3.05 a	5 a	6.58 a	9.45 a
	16	0.77 a	1.37 a	2.45 a	3.4 a	1.09 a	1.75 a	3.21 a	4.31 a	6.5 a	1.41 a	2.39 a	4.12 a	6.78 a	8.05 a	2.79 a	4.78 a	6.37 a	9.26 a
	24	0.36 c	0.96 b	2.13 a	3.12 a	0.65 c	1.33 a	2.86 a	4 a	6.19 a	0.93 b	1.92 a	3.72 a	6.32 a	7.72 a	2.28 a	4.35 a	5.95 a	8.87 a
10	12	0.8 b	1.38 a	2.35 a	3.23 a	1.11 a	1.63 a	3.06 a	4.06 a	6.05 a	1.43 a	2.35 a	3.89 a	6.35 a	7.45 a	2.77 a	4.59 a	5.96 a	8.61 a
	16	0.56 c	1.13 b	2.17 a	3.07 a	0.85 b	1.4 a	2.86 a	3.88 a	5.87 a	1.14 a	2.07 a	3.67 a	6.08 a	7.27 a	2.47 a	4.33 a	5.72 a	8.39 a
	24	0.07 e	0.65 d	1.79 c	2.74 b	0.33 d	0.93 c	2.45 b	3.52 a	5.51 a	0.56 c	1.52 b	3.21 a	5.55 a	6.89 a	1.86 a	3.82 a	5.24 a	7.95 a
12	12	0.44 d	0.96 c	1.82 b	2.58 a	0.69 d	1.32 b	2.35 a	3.19 a	4.78 a	0.95 c	1.77 a	2.99 a	4.95 a	5.89 a	2.13 a	3.55 a	4.68 a	6.87 a
	16	0.12 e	0.64 d	1.59 c	2.38 b	0.35 e	0.99 d	2.1 c	2.98 b	4.57 a	0.57 d	1.42 c	2.72 b	4.63 a	5.67 a	1.73 b	3.25 a	4.4 a	6.61 a
	24			1.13 e	1.98 d		0.32 e	1.61 d	2.54 d	4.14 b	-0.18 e	0.7 d	2.17 d	4 c	5.23 a	0.94 d	2.63 c	3.82 b	6.09 a
14	12	0.08 e	0.54 e	1.33 d	1.98 c	0.28 e	0.84 d	1.73 d	2.44 c	3.7 a	0.47 e	1.2 d	2.21 c	3.75 b	4.59 a	1.48 c	2.64 b	3.58 a	5.37 a
	16		0.16 e	1.06 e	1.75 d		0.44 e	1.45 e	2.2 d	3.46 c	0.02 e	0.78 e	1.9 d	3.4 c	4.34 b	1.01 d	2.3 c	3.26 b	5.08 a
	24			0.53 f	1.3 e			0.9 f	1.71 e	3 d			1.29 e	2.7 e	3.86 d	0.08 e	1.61 e	2.63 d	4.51 c
16	12		0.16 f	0.91 e	1.47 e		0.4 e	1.22 e	1.83 d	2.85 c	0.05 f	0.69 e	1.59 d	2.81 d	3.57 b	0.89 e	1.92 d	2.71 c	4.2 a
	16			0.61 f	1.22 e			0.92 f	1.57 e	2.6 d		0.23 f	1.26 e	2.43 e	3.31 d	0.37 e	1.55 e	2.37 d	3.89 c
	24			0.03 f	0.73 f			0.32 f	1.04 f	2.09 e			0.6 f	1.69 f	2.79 e		0.81 f	1.68 e	3.27 d

15 psf Lateral Load

Wall Height (ft)	Spacing (in.) o.c.	362S300-(mils)			600S137-(mils)					600S162-(mils)						600S200-(mils)	
		50 ksi			33 ksi		50 ksi			33 ksi		50 ksi				33 ksi	
		54	68	97	33	43	54	68	97	33	43	54	68	97	118	33	43
8	12	5.26 a	7.47 a	11.32 a	1.46 a	2.21 a	3.55 a	4.79 a	7.3 a	2.11 a	3.09 a	5.3 a	7.14 a	11.06 a	13.89 a	2.51 a	3.92 a
	16	5.02 a	7.22 a	11.1 a	1.33 a	2.08 a	3.44 a	4.68 a	7.21 a	1.97 a	2.96 a	5.16 a	7.01 a	10.93 a	13.76 a	2.35 a	3.75 a
	24	4.55 a	6.74 a	10.66 a	1.05 a	1.81 a	3.23 a	4.47 a	7.02 a	1.68 a	2.68 a	4.9 a	6.76 a	10.67 a	13.49 a	2.03 a	3.42 a
9	12	4.85 a	6.86 a	10.56 a	1.35 a	2.1 a	3.47 a	4.7 a	7.23 a	1.99 a	2.98 a	5.19 a	7.04 a	10.95 a	13.79 a	2.36 a	3.75 a
	16	4.57 a	6.57 a	10.29 a	1.18 a	1.93 a	3.33 a	4.57 a	7.11 a	1.81 a	2.81 a	5.02 a	6.88 a	10.79 a	13.62 a	2.17 a	3.55 a
	24	3.99 a	6 a	9.77 a	0.83 a	1.6 a	3.05 a	4.3 a	6.86 a	1.45 a	2.46 a	4.69 a	6.56 a	10.46 a	13.28 a	1.77 a	3.14 a
10	12	4.42 a	6.24 a	9.6 a	1.23 a	1.98 a	3.37 a	4.61 a	7.14 a	1.85 a	2.84 a	5.06 a	6.93 a	10.84 a	13.67 a	2.21 a	3.57 a
	16	4.08 a	5.9 a	9.3 a	1.02 a	1.78 a	3.2 a	4.44 a	6.99 a	1.63 a	2.63 a	4.85 a	6.73 a	10.64 a	13.46 a	1.96 a	3.32 a
	24	3.41 a	5.24 a	8.7 a	0.59 a	1.36 a	2.86 a	4.11 a	6.69 a	1.18 a	2.2 a	4.44 a	6.34 a	10.23 a	13.04 a	1.48 a	2.81 a
12	12	3.57 a	5 a	7.64 a	0.95 a	1.71 a	3.15 a	4.39 a	6.94 a	1.52 a	2.51 a	4.64 a	6.54 a	10.57 a	13.39 a	1.84 a	3.14 a
	16	3.14 b	4.59 a	7.27 a	0.64 a	1.41 a	2.9 a	4.15 a	6.73 a	1.21 a	2.2 a	4.35 a	6.26 a	10.28 a	13.09 a	1.5 a	2.79 a
	24	2.27 d	3.76 c	6.55 a	0.02 c	0.81 b	2.41 a	3.67 a	6.29 a	0.58 c	1.6 a	3.78 a	5.71 a	9.69 a	12.49 a	0.81 b	2.09 a
14	12	2.66 c	3.79 b	5.94 a	0.61 b	1.39 a	2.88 a	4.13 a	6.71 a	1.15 a	2.11 a	4.13 a	5.95 a	9.93 a	13.07 a	1.42 a	2.65 a
	16	2.16 d	3.32 c	5.54 b	0.19 d	0.98 b	2.55 a	3.8 a	6.41 a	0.73 c	1.71 b	3.75 a	5.59 a	9.54 a	12.66 a	0.97 b	2.19 a
	24	1.14 e	2.39 e	4.73 d		0.17 d	1.89 c	3.15 b	5.82 a	-0.09 d	0.92 d	3.01 c	4.87 a	8.77 a	11.84 a	0.07 d	1.27 c
16	12	1.83 e	2.78 d	4.6 b	0.22 d	1.01 c	2.58 b	3.83 a	6.44 a	0.73 c	1.67 b	3.53 a	5.23 a	8.89 a	11.74 a	0.96 c	2.1 a
	16	1.28 e	2.27 e	4.16 d	-0.32 e	0.48 d	2.14 c	3.4 b	6.05 a	0.22 d	1.17 d	3.07 c	4.8 a	8.42 a	11.24 a	0.4 d	1.54 c
	24	0.18 f	1.26 f	3.29 e		-0.58 e	1.28 e	2.55 d	5.28 c		0.18 e	2.17 d	3.92 c	7.49 b	10.26 a	-0.73 e	0.4 d

See Combined Axial and Lateral Load Table Notes

15 psf Lateral Load

Wall Height (ft)	Spacing (in.) o.c.	600S200-(mils)				600S250-(mils)					600S300-(mils)				600S350-(mils)			
		50 ksi				33 ksi	50 ksi				50 ksi				50 ksi			
		54	68	97	118	43	54	68	97	118	54	68	97	118	54	68	97	118
8	12	7.11 a	9.54 a	15.01 a	19.3 a	4.39 a	7.36 a	10.67 a	17.63 a	22.51 a	7.67 a	10.85 a	18.94 a	24.61 a	9.96 a	14.45 a	23.56 a	31.11 a
	16	6.99 a	9.42 a	14.89 a	19.18 a	4.27 a	7.24 a	10.54 a	17.49 a	22.36 a	7.55 a	10.73 a	18.8 a	24.47 a	9.83 a	14.32 a	23.41 a	30.95 a
	24	6.76 a	9.18 a	14.66 a	18.94 a	4.01 a	7.01 a	10.28 a	17.21 a	22.07 a	7.31 a	10.48 a	18.53 a	24.18 a	9.58 a	14.04 a	23.11 a	30.65 a
9	12	6.93 a	9.32 a	14.72 a	18.95 a	4.26 a	7.18 a	10.42 a	17.23 a	22.03 a	7.48 a	10.61 a	18.52 a	24.11 a	9.71 a	14.14 a	23.07 a	30.33 a
	16	6.78 a	9.17 a	14.58 a	18.8 a	4.1 a	7.03 a	10.26 a	17.06 a	21.85 a	7.33 a	10.46 a	18.35 a	23.93 a	9.56 a	13.97 a	22.88 a	30.13 a
	24	6.48 a	8.87 a	14.29 a	18.5 a	3.78 a	6.74 a	9.94 a	16.71 a	21.49 a	7.04 a	10.14 a	18 a	23.57 a	9.24 a	13.63 a	22.51 a	29.75 a
10	12	6.71 a	9.07 a	14.38 a	18.53 a	4.11 a	6.98 a	10.14 a	16.77 a	21.46 a	7.27 a	10.34 a	18.03 a	23.53 a	9.44 a	13.78 a	22.52 a	29.44 a
	16	6.53 a	8.89 a	14.21 a	18.35 a	3.91 a	6.8 a	9.94 a	16.56 a	21.24 a	7.09 a	10.15 a	17.82 a	23.31 a	9.25 a	13.57 a	22.3 a	29.21 a
	24	6.17 a	8.52 a	13.86 a	17.98 a	3.52 a	6.44 a	9.55 a	16.14 a	20.81 a	6.73 a	9.76 a	17.4 a	22.88 a	8.87 a	13.16 a	21.85 a	28.75 a
12	12	6.19 a	8.44 a	13.52 a	17.45 a	3.76 a	6.49 a	9.47 a	15.66 a	20.07 a	6.77 a	9.74 a	16.88 a	22.19 a	8.8 a	12.95 a	21.3 a	27.39 a
	16	5.94 a	8.19 a	13.29 a	17.2 a	3.48 a	6.24 a	9.2 a	15.37 a	19.78 a	6.52 a	9.47 a	16.6 a	21.89 a	8.54 a	12.67 a	20.99 a	27.08 a
	24	5.44 a	7.69 a	12.81 a	16.69 a	2.93 a	5.75 a	8.66 a	14.79 a	19.18 a	6.02 a	8.94 a	16.02 a	21.3 a	8.01 a	12.1 a	20.37 a	26.46 a
14	12	5.55 a	7.66 a	12.43 a	16.05 a	3.35 a	5.95 a	8.69 a	14.31 a	18.39 a	6.19 a	9.05 a	15.55 a	20.71 a	8.07 a	11.99 a	19.72 a	25.05 a
	16	5.24 a	7.35 a	12.12 a	15.73 a	2.99 a	5.63 a	8.34 a	13.94 a	18.01 a	5.86 a	8.7 a	15.19 a	20.32 a	7.73 a	11.63 a	19.32 a	24.66 a
	24	4.6 a	6.71 a	11.51 a	15.09 a	2.26 a	4.99 a	7.64 a	13.21 a	17.26 a	5.22 a	8 a	14.46 a	19.55 a	7.05 a	10.89 a	18.53 a	23.88 a
16	12	4.84 a	6.78 a	11.15 a	14.42 a	2.89 a	5.41 a	7.85 a	12.81 a	16.5 a	5.55 a	8.28 a	14.13 a	18.67 a	7.27 a	10.94 a	17.69 a	22.54 a
	16	4.46 a	6.4 a	10.79 a	14.04 a	2.44 a	5 a	7.42 a	12.37 a	16.05 a	5.15 a	7.85 a	13.68 a	18.21 a	6.86 a	10.49 a	17.22 a	22.07 a
	24	3.7 b	5.64 a	10.06 a	13.27 a	1.53 c	4.2 b	6.57 a	11.49 a	15.15 a	4.35 a	6.99 a	12.8 a	17.29 a	6.03 a	9.59 a	16.27 a	21.14 a

15 psf Lateral Load

Wall Height (ft)	Spacing (in.) o.c.	800S137-(mils)					800S162-(mils)						800S200-(mils)					
		33 ksi		50 ksi			33 ksi		50 ksi				33 ksi		50 ksi			
		33	43	54	68	97	33	43	54	68	97	118	33	43	54	68	97	118
8	12	1.53 a*	2.29 a	3.45 a	4.63 a	7.13 a	2.17 a*	3.19 a	5.28 a	7.09 a	11.12 a	14.18 a	2.73 a*	4.31 a	7.58 a	10.1 a	15.8 a	20.27 a
	16	1.44 a*	2.22 a	3.39 a	4.57 a	7.09 a	2.07 a*	3.1 a	5.2 a	7.02 a	11.05 a	14.11 a	2.62 a*	4.23 a	7.49 a	10.02 a	15.72 a	20.18 a
	24	1.27 a*	2.08 a	3.28 a	4.47 a	6.99 a	1.86 a*	2.94 a	5.06 a	6.88 a	10.92 a	13.98 a	2.39 a*	4.06 a	7.32 a	9.85 a	15.56 a	20.02 a
9	12	1.46 a*	2.23 a	3.4 a	4.58 a	7.1 a	2.09 a*	3.12 a	5.22 a	7.03 a	11.06 a	14.13 a	2.64 a*	4.25 a	7.51 a	10.04 a	15.73 a	20.2 a
	16	1.35 a*	2.15 a	3.34 a	4.52 a	7.04 a	1.96 a*	3.01 a	5.13 a	6.94 a	10.98 a	14.04 a	2.5 a*	4.14 a	7.4 a	9.93 a	15.63 a	20.09 a
	24	1.14 a*	1.97 a	3.2 a	4.38 a	6.91 a	1.69 a*	2.8 a	4.94 a	6.76 a	10.81 a	13.88 a	2.21 a*	3.92 a	7.19 a	9.72 a	15.43 a	19.88 a
10	12	1.38 a*	2.17 a	3.36 a	4.54 a	7.05 a	2 a*	3.05 a	5.15 a	6.97 a	11.01 a	14.07 a	2.54 a*	4.17 a	7.43 a	9.96 a	15.66 a	20.13 a
	16	1.25 a*	2.06 a	3.27 a	4.46 a	6.98 a	1.83 a*	2.92 a	5.04 a	6.86 a	10.9 a	13.96 a	2.36 a*	4.03 a	7.3 a	9.83 a	15.54 a	20 a
	24	0.98 a*	1.85 a	3.1 a	4.29 a	6.83 a	1.51 a*	2.66 a	4.81 a	6.64 a	10.7 a	13.76 a	2.01 a*	3.76 a	7.04 a	9.57 a	15.29 a	19.73 a
12	12	1.21 a*	2.03 a	3.24 a	4.43 a	6.96 a	1.78 a*	2.87 a	5 a	6.82 a	10.87 a	13.93 a	2.3 a*	3.98 a	7.25 a	9.79 a	15.5 a	19.95 a
	16	1.02 a*	1.87 a	3.12 a	4.31 a	6.85 a	1.55 a*	2.69 a	4.84 a	6.66 a	10.72 a	13.78 a	2.05 a*	3.79 a	7.06 a	9.6 a	15.32 a	19.76 a
	24	0.63 a*	1.56 a	2.87 a	4.07 a	6.63 a	1.08 a*	2.31 a	4.51 a	6.34 a	10.43 a	13.49 a	1.54 a*	3.4 a	6.68 a	9.23 a	14.96 a	19.39 a
14	12	1 a*	1.86 a	3.11 a	4.3 a	6.84 a	1.53 a*	2.67 a	4.82 a	6.65 a	10.71 a	13.77 a	2 a*	3.71 a	6.88 a	9.41 a	15.21 a	19.75 a
	16	0.74 a*	1.65 a	2.94 a	4.14 a	6.69 a	1.21 a*	2.42 a	4.6 a	6.43 a	10.51 a	13.57 a	1.66 a*	3.45 a	6.63 a	9.16 a	14.97 a	19.49 a
	24	0.21 a*	1.22 a	2.61 a	3.81 a	6.4 a	0.57 a*	1.9 a	4.15 a	6 a	10.11 a	13.17 a	0.98 a*	2.93 a	6.12 a	8.66 a	14.48 a	18.98 a
16	12	0.76 a*	1.67 a	2.96 a	4.15 a	6.7 a	1.23 a*	2.44 a	4.62 a	6.45 a	10.53 a	13.59 a	1.66 a*	3.39 a	6.42 a	8.86 a	14.48 a	18.95 a
	16	0.42 a*	1.39 a	2.74 a	3.94 a	6.51 a	0.82 a*	2.1 a	4.33 a	6.17 a	10.26 a	13.32 a	1.22 a*	3.06 a	6.1 a	8.54 a	14.17 a	18.63 a
	24		0.84 a	2.3 a	3.52 a	6.13 a		1.44 a	3.74 a	5.6 a	9.74 a	12.8 a	0.35 a*	2.4 a	5.46 a	7.91 a	13.56 a	17.98 a

See Combined Axial and Lateral Load Table Notes

15 psf Lateral Load

Wall Height (ft)	Spacing (in.) o.c.	800S250-(mils)					800S300-(mils)				800S350-(mils)			
		33 ksi	50 ksi				50 ksi				50 ksi			
		43	54	68	97	118	54	68	97	118	54	68	97	118
8	12	4.71 a	7.95 a	11.55 a	19.35 a	25.22 a	8.3 a	11.82 a	21.11 a	27.58 a	10.74 a	15.54 a	25.64 a	34.09 a
	16	4.61 a	7.86 a	11.46 a	19.24 a	25.11 a	8.2 a	11.73 a	21.01 a	27.47 a	10.64 a	15.44 a	25.53 a	33.97 a
	24	4.43 a	7.69 a	11.27 a	19.04 a	24.89 a	8.02 a	11.55 a	20.8 a	27.25 a	10.45 a	15.24 a	25.31 a	33.74 a
9	12	4.62 a	7.85 a	11.44 a	19.19 a	24.99 a	8.18 a	11.69 a	20.88 a	27.31 a	10.59 a	15.36 a	25.42 a	33.76 a
	16	4.5 a	7.74 a	11.32 a	19.06 a	24.86 a	8.06 a	11.57 a	20.75 a	27.17 a	10.47 a	15.24 a	25.28 a	33.62 a
	24	4.26 a	7.51 a	11.08 a	18.8 a	24.58 a	7.83 a	11.34 a	20.49 a	26.9 a	10.22 a	14.99 a	25 a	33.33 a
10	12	4.52 a	7.73 a	11.3 a	19 a	24.72 a	8.05 a	11.53 a	20.61 a	26.99 a	10.41 a	15.16 a	25.12 a	33.39 a
	16	4.37 a	7.59 a	11.16 a	18.84 a	24.55 a	7.9 a	11.39 a	20.45 a	26.82 a	10.26 a	15 a	24.95 a	33.21 a
	24	4.08 a	7.32 a	10.87 a	18.53 a	24.22 a	7.62 a	11.11 a	20.13 a	26.48 a	9.97 a	14.7 a	24.61 a	32.86 a
12	12	4.28 a	7.43 a	10.98 a	18.54 a	24 a	7.72 a	11.14 a	19.92 a	26.17 a	9.99 a	14.66 a	24.3 a	32.49 a
	16	4.08 a	7.24 a	10.77 a	18.31 a	23.77 a	7.52 a	10.94 a	19.69 a	25.93 a	9.78 a	14.45 a	24.06 a	32.24 a
	24	3.66 a	6.85 a	10.36 a	17.86 a	23.3 a	7.12 a	10.54 a	19.24 a	25.46 a	9.37 a	14.02 a	23.58 a	31.74 a
14	12	4 a	7.06 a	10.48 a	17.75 a	23.02 a	7.32 a	10.64 a	19.03 a	25.11 a	9.49 a	14.04 a	23.32 a	31.11 a
	16	3.72 a	6.8 a	10.2 a	17.45 a	22.71 a	7.05 a	10.38 a	18.74 a	24.8 a	9.21 a	13.75 a	23 a	30.78 a
	24	3.17 a	6.28 a	9.66 a	16.85 a	22.09 a	6.52 a	9.85 a	18.14 a	24.17 a	8.66 a	13.19 a	22.37 a	30.13 a
16	12	3.67 a	6.61 a	9.86 a	16.74 a	21.78 a	6.85 a	10.05 a	17.98 a	23.86 a	8.92 a	13.31 a	22.21 a	29.32 a
	16	3.31 a	6.28 a	9.52 a	16.36 a	21.39 a	6.51 a	9.72 a	17.61 a	23.47 a	8.57 a	12.95 a	21.82 a	28.91 a
	24	2.6 a	5.63 a	8.83 a	15.62 a	20.61 a	5.83 a	9.05 a	16.86 a	22.68 a	7.87 a	12.24 a	21.02 a	28.1 a

See Combined Axial and Lateral Load Table Notes



20 psf Lateral Load

Wall Height (ft)	Spacing (in.) o.c.	362S137-(mils)				362S162-(mils)					362S200-(mils)					362S250-(mils)			
		33 ksi		50 ksi		33 ksi		50 ksi			33 ksi		50 ksi			33 ksi	50 ksi		
		33	43	54	68	33	43	54	68	97	97	33	54	68	97	43	54	68	97
8	12	0.96 a	1.58 a	2.71 a	3.7 a	1.32 a	2 a	3.54 a	4.72 a	7.08 a	1.67 a	2.69 a	4.55 a	7.4 a	8.78 a	3.09 a	5.19 a	6.99 a	10.08 a
	16	0.74 a	1.36 a	2.54 a	3.55 a	1.08 a	1.77 a	3.35 a	4.54 a	6.9 a	1.4 a	2.43 a	4.33 a	7.14 a	8.6 a	2.82 a	4.95 a	6.76 a	9.86 a
	24	0.31 c	0.92 b	2.18 a	3.24 a	0.6 b	1.31 a	2.96 a	4.19 a	6.55 a	0.87 b	1.92 a	3.88 a	6.62 a	8.22 a	2.26 a	4.47 a	6.29 a	9.43 a
9	12	0.77 a	1.37 a	2.45 a	3.4 a	1.09 a	1.75 a	3.21 a	4.31 a	6.5 a	1.41 a	2.39 a	4.12 a	6.78 a	8.05 a	2.79 a	4.78 a	6.37 a	9.26 a
	16	0.5 c	1.09 b	2.24 a	3.22 a	0.8 b	1.47 a	2.98 a	4.1 a	6.29 a	1.09 a	2.07 a	3.85 a	6.47 a	7.83 a	2.45 a	4.49 a	6.09 a	9 a
	24		0.55 d	1.81 c	2.84 b	0.21 d	0.91 c	2.51 b	3.69 a	5.87 a	0.44 c	1.45 b	3.32 a	5.85 a	7.39 a	1.77 a	3.91 a	5.53 a	8.49 a
10	12	0.56 c	1.13 b	2.17 a	3.07 a	0.85 b	1.4 a	2.86 a	3.88 a	5.87 a	1.14 a	2.07 a	3.67 a	6.08 a	7.27 a	2.47 a	4.33 a	5.72 a	8.39 a
	16	0.24 d	0.81 c	1.92 b	2.85 a	0.5 d	1.09 c	2.59 a	3.64 a	5.63 a	0.75 c	1.7 b	3.36 a	5.73 a	7.02 a	2.06 a	3.99 a	5.4 a	8.1 a
	24		0.16 e	1.42 d	2.42 c		0.47 d	2.05 c	3.16 b	5.15 a		0.96 d	2.75 c	5.02 b	6.52 a	1.25 c	3.31 b	4.76 a	7.51 a
12	12	0.12 e	0.64 d	1.59 c	2.38 b	0.35 e	0.99 d	2.1 c	2.98 b	4.57 a	0.57 d	1.42 c	2.72 b	4.63 a	5.67 a	1.73 b	3.25 a	4.4 a	6.61 a
	16		0.21 e	1.28 d	2.12 d		0.54 e	1.78 d	2.69 c	4.28 b	0.07 e	0.94 d	2.35 c	4.21 b	5.38 a	1.21 d	2.84 c	4.01 a	6.26 a
	24			0.66 e	1.58 e			1.12 e	2.11 e	3.72 d			1.62 e	3.37 d	4.79 c	0.16 e	2.02 d	3.25 c	5.56 b
14	12		0.16 e	1.06 e	1.75 d		0.44 e	1.45 e	2.2 d	3.46 c	0.02 e	0.78 e	1.9 d	3.4 c	4.34 b	1.01 d	2.3 c	3.26 b	5.08 a
	16			0.71 f	1.45 e			1.08 e	1.87 e	3.15 d		0.22 e	1.5 e	2.93 d	4.02 c	0.39 e	1.84 d	2.84 d	4.7 b
	24				0.84 f			0.35 f	1.22 f	2.53 e			0.68 f	2 e	3.37 e		0.93 e	1.99 e	3.93 d
16	12			0.61 f	1.22 e			0.92 f	1.57 e	2.6 d		0.23 f	1.26 e	2.43 e	3.31 d	0.37 e	1.55 e	2.37 d	3.89 c
	16			0.23 f	0.9 f			0.52 f	1.22 f	2.26 e			0.82 f	1.94 e	2.96 e		1.06 e	1.91 e	3.47 d
	24				0.24 f				0.52 f	1.59 f				0.94 f	2.27 f		0.07 f	1 f	2.65 e

20 psf Lateral Load

Wall Height (ft)	Spacing (in.) o.c.	362S300-(mils)			600S137-(mils)					600S162-(mils)						600S200-(mils)	
		50 ksi			33 ksi		50 ksi			33 ksi		50 ksi				33 ksi	
		54	68	97	33	43	54	68	97	33	43	54	68	97	118	33	43
8	12	5.26 a	7.47 a	11.32 a	1.46 a	2.21 a	3.55 a	4.79 a	7.3 a	2.11 a	3.09 a	5.3 a	7.14 a	11.06 a	13.89 a	2.51 a	3.92 a
	16	5.02 a	7.22 a	11.1 a	1.33 a	2.08 a	3.44 a	4.68 a	7.21 a	1.97 a	2.96 a	5.16 a	7.01 a	10.93 a	13.76 a	2.35 a	3.75 a
	24	4.55 a	6.74 a	10.66 a	1.05 a	1.81 a	3.23 a	4.47 a	7.02 a	1.68 a	2.68 a	4.9 a	6.76 a	10.67 a	13.49 a	2.03 a	3.42 a
9	12	4.85 a	6.86 a	10.56 a	1.35 a	2.1 a	3.47 a	4.7 a	7.23 a	1.99 a	2.98 a	5.19 a	7.04 a	10.95 a	13.79 a	2.36 a	3.75 a
	16	4.57 a	6.57 a	10.29 a	1.18 a	1.93 a	3.33 a	4.57 a	7.11 a	1.81 a	2.81 a	5.02 a	6.88 a	10.79 a	13.62 a	2.17 a	3.55 a
	24	3.99 a	6 a	9.77 a	0.83 a	1.6 a	3.05 a	4.3 a	6.86 a	1.45 a	2.46 a	4.69 a	6.56 a	10.46 a	13.28 a	1.77 a	3.14 a
10	12	4.42 a	6.24 a	9.6 a	1.23 a	1.98 a	3.37 a	4.61 a	7.14 a	1.85 a	2.84 a	5.06 a	6.93 a	10.84 a	13.67 a	2.21 a	3.57 a
	16	4.08 a	5.9 a	9.3 a	1.02 a	1.78 a	3.2 a	4.44 a	6.99 a	1.63 a	2.63 a	4.85 a	6.73 a	10.64 a	13.46 a	1.96 a	3.32 a
	24	3.41 a	5.24 a	8.7 a	0.59 a	1.36 a	2.86 a	4.11 a	6.69 a	1.18 a	2.2 a	4.44 a	6.34 a	10.23 a	13.04 a	1.48 a	2.81 a
12	12	3.57 a	5 a	7.64 a	0.95 a	1.71 a	3.15 a	4.39 a	6.94 a	1.52 a	2.51 a	4.64 a	6.54 a	10.57 a	13.39 a	1.84 a	3.14 a
	16	3.14 b	4.59 a	7.27 a	0.64 a	1.41 a	2.9 a	4.15 a	6.73 a	1.21 a	2.2 a	4.35 a	6.26 a	10.28 a	13.09 a	1.5 a	2.79 a
	24	2.27 d	3.76 c	6.55 a	0.02 c	0.81 b	2.41 a	3.67 a	6.29 a	0.58 c	1.6 a	3.78 a	5.71 a	9.69 a	12.49 a	0.81 b	2.09 a
14	12	2.66 c	3.79 b	5.94 a	0.61 b	1.39 a	2.88 a	4.13 a	6.71 a	1.15 a	2.11 a	4.13 a	5.95 a	9.93 a	13.07 a	1.42 a	2.65 a
	16	2.16 d	3.32 c	5.54 b	0.19 d	0.98 b	2.55 a	3.8 a	6.41 a	0.73 c	1.71 b	3.75 a	5.59 a	9.54 a	12.66 a	0.97 b	2.19 a
	24	1.14 e	2.39 e	4.73 d		0.17 d	1.89 c	3.15 b	5.82 a		0.92 d	3.01 c	4.87 a	8.77 a	11.84 a	0.07 d	1.27 c
16	12	1.83 e	2.78 d	4.6 b	0.22 d	1.01 c	2.58 b	3.83 a	6.44 a	0.73 c	1.67 b	3.53 a	5.23 a	8.89 a	11.74 a	0.96 c	2.1 a
	16	1.28 e	2.27 e	4.16 d		0.48 d	2.14 c	3.4 b	6.05 a	0.22 d	1.17 d	3.07 c	4.8 a	8.42 a	11.24 a	0.4 d	1.54 c
	24	0.18 f	1.26 f	3.29 e			1.28 e	2.55 d	5.28 c		0.18 e	2.17 d	3.92 c	7.49 b	10.26 a		0.4 d

See Combined Axial and Lateral Load Table Notes

20 psf Lateral Load

Wall Height (ft)	Spacing (in.) o.c.	600S200-(mils)				600S250-(mils)					600S300-(mils)				600S350-(mils)			
		50 ksi				33 ksi	50 ksi				50 ksi				50 ksi			
		54	68	97	118	43	54	68	97	118	54	68	97	118	54	68	97	118
8	12	6.99 a	9.42 a	14.89 a	19.18 a	4.27 a	7.24 a	10.54 a	17.49 a	22.36 a	7.55 a	10.73 a	18.8 a	24.47 a	9.83 a	14.32 a	23.41 a	30.95 a
	16	6.84 a	9.26 a	14.74 a	19.02 a	4.1 a	7.08 a	10.37 a	17.3 a	22.17 a	7.39 a	10.56 a	18.62 a	24.28 a	9.67 a	14.13 a	23.21 a	30.75 a
	24	6.52 a	8.94 a	14.43 a	18.69 a	3.76 a	6.77 a	10.02 a	16.93 a	21.79 a	7.07 a	10.22 a	18.25 a	23.89 a	9.33 a	13.77 a	22.81 a	30.34 a
9	12	6.78 a	9.17 a	14.58 a	18.8 a	4.1 a	7.03 a	10.26 a	17.06 a	21.85 a	7.33 a	10.46 a	18.35 a	23.93 a	9.56 a	13.97 a	22.88 a	30.13 a
	16	6.58 a	8.97 a	14.39 a	18.6 a	3.89 a	6.84 a	10.04 a	16.83 a	21.61 a	7.13 a	10.25 a	18.12 a	23.69 a	9.35 a	13.74 a	22.63 a	29.88 a
	24	6.19 a	8.58 a	14.01 a	18.2 a	3.46 a	6.45 a	9.61 a	16.36 a	21.13 a	6.74 a	9.82 a	17.66 a	23.21 a	8.93 a	13.29 a	22.14 a	29.37 a
10	12	6.53 a	8.89 a	14.21 a	18.35 a	3.91 a	6.8 a	9.94 a	16.56 a	21.24 a	7.09 a	10.15 a	17.82 a	23.31 a	9.25 a	13.57 a	22.3 a	29.21 a
	16	6.29 a	8.64 a	13.98 a	18.1 a	3.65 a	6.56 a	9.68 a	16.28 a	20.95 a	6.85 a	9.89 a	17.54 a	23.03 a	8.99 a	13.3 a	22 a	28.9 a
	24	5.81 a	8.16 a	13.51 a	17.61 a	3.13 a	6.08 a	9.16 a	15.72 a	20.38 a	6.37 a	9.38 a	16.99 a	22.45 a	8.48 a	12.75 a	21.4 a	28.29 a
12	12	5.94 a	8.19 a	13.29 a	17.2 a	3.48 a	6.24 a	9.2 a	15.37 a	19.78 a	6.52 a	9.47 a	16.6 a	21.89 a	8.54 a	12.67 a	20.99 a	27.08 a
	16	5.61 a	7.86 a	12.97 a	16.86 a	3.12 a	5.91 a	8.84 a	14.98 a	19.38 a	6.19 a	9.12 a	16.21 a	21.49 a	8.19 a	12.29 a	20.57 a	26.66 a
	24	4.95 a	7.2 a	12.33 a	16.19 a	2.38 a	5.25 a	8.12 a	14.22 a	18.59 a	5.52 a	8.41 a	15.45 a	20.7 a	7.49 a	11.53 a	19.75 a	25.84 a
14	12	5.24 a	7.35 a	12.12 a	15.73 a	2.99 a	5.63 a	8.34 a	13.94 a	18.01 a	5.86 a	8.7 a	15.19 a	20.32 a	7.73 a	11.63 a	19.32 a	24.66 a
	16	4.81 a	6.92 a	11.72 a	15.31 a	2.5 a	5.2 a	7.87 a	13.46 a	17.51 a	5.43 a	8.24 a	14.7 a	19.81 a	7.28 a	11.14 a	18.79 a	24.14 a
	24	3.97 b	6.08 a	10.9 a	14.45 a	1.53 b	4.34 a	6.95 a	12.48 a	16.51 a	4.57 a	7.31 a	13.72 a	18.78 a	6.37 a	10.16 a	17.74 a	23.1 a
16	12	4.46 a	6.4 a	10.79 a	14.04 a	2.44 a	5 a	7.42 a	12.37 a	16.05 a	5.15 a	7.85 a	13.68 a	18.21 a	6.86 a	10.49 a	17.22 a	22.07 a
	16	3.95 b	5.89 a	10.3 a	13.53 a	1.83 b	4.47 a	6.86 a	11.79 a	15.45 a	4.62 a	7.27 a	13.09 a	17.59 a	6.3 a	9.89 a	16.59 a	21.45 a
	24	2.94 d	4.87 c	9.32 a	12.51 a	0.62 d	3.39 c	5.72 b	10.62 a	14.26 a	3.56 c	6.12 b	11.91 a	16.36 a	5.2 b	8.7 a	15.32 a	20.21 a

20 psf Lateral Load

Wall Height (ft)	Spacing (in.) o.c.	800S137-(mils)					800S162-(mils)						800S200-(mils)					
		33 ksi		50 ksi			33 ksi		50 ksi				33 ksi		50 ksi			
		33	43	54	68	97	33	43	54	68	97	118	33	43	54	68	97	118
8	12	1.44 a*	2.22 a	3.39 a	4.57 a	7.09 a	2.07 a*	3.1 a	5.2 a	7.02 a	11.05 a	14.11 a	2.62 a*	4.23 a	7.49 a	10.02 a	15.72 a	20.18 a
	16	1.33 a*	2.13 a	3.32 a	4.5 a	7.02 a	1.93 a*	2.99 a	5.11 a	6.92 a	10.96 a	14.02 a	2.47 a*	4.11 a	7.38 a	9.91 a	15.61 a	20.07 a
	24	1.1 a*	1.94 a	3.17 a	4.36 a	6.9 a	1.65 a*	2.77 a	4.91 a	6.73 a	10.79 a	13.85 a	2.16 a*	3.88 a	7.15 a	9.69 a	15.4 a	19.85 a
9	12	1.35 a*	2.15 a	3.34 a	4.52 a	7.04 a	1.96 a*	3.01 a	5.13 a	6.94 a	10.98 a	14.04 a	2.5 a*	4.14 a	7.4 a	9.93 a	15.63 a	20.09 a
	16	1.21 a*	2.03 a	3.24 a	4.43 a	6.96 a	1.78 a*	2.87 a	5 a	6.82 a	10.87 a	13.93 a	2.31 a*	3.99 a	7.26 a	9.79 a	15.5 a	19.95 a
	24	0.92 a*	1.8 a	3.06 a	4.25 a	6.79 a	1.43 a*	2.59 a	4.76 a	6.58 a	10.65 a	13.71 a	1.93 a*	3.7 a	6.97 a	9.51 a	15.23 a	19.67 a
10	12	1.25 a*	2.06 a	3.27 a	4.46 a	6.98 a	1.83 a*	2.92 a	5.04 a	6.86 a	10.9 a	13.96 a	2.36 a*	4.03 a	7.3 a	9.83 a	15.54 a	20 a
	16	1.07 a*	1.92 a	3.16 a	4.35 a	6.88 a	1.62 a*	2.74 a	4.89 a	6.71 a	10.77 a	13.83 a	2.13 a*	3.85 a	7.12 a	9.66 a	15.37 a	19.82 a
	24	0.72 a*	1.63 a	2.93 a	4.12 a	6.68 a	1.18 a*	2.39 a	4.58 a	6.41 a	10.49 a	13.55 a	1.66 a*	3.49 a	6.77 a	9.31 a	15.04 a	19.47 a
12	12	1.02 a*	1.87 a	3.12 a	4.31 a	6.85 a	1.55 a*	2.69 a	4.84 a	6.66 a	10.72 a	13.78 a	2.05 a*	3.79 a	7.06 a	9.6 a	15.32 a	19.76 a
	16	0.76 a*	1.67 a	2.96 a	4.15 a	6.7 a	1.23 a*	2.44 a	4.62 a	6.45 a	10.53 a	13.59 a	1.71 a*	3.53 a	6.81 a	9.35 a	15.08 a	19.51 a
	24	0.24 a*	1.25 a	2.63 a	3.83 a	6.42 a	0.61 a*	1.94 a	4.18 a	6.02 a	10.13 a	13.19 a	1.03 a*	3.01 a	6.3 a	8.85 a	14.6 a	19.01 a
14	12	0.74 a*	1.65 a	2.94 a	4.14 a	6.69 a	1.21 a*	2.42 a	4.6 a	6.43 a	10.51 a	13.57 a	1.66 a*	3.45 a	6.63 a	9.16 a	14.97 a	19.49 a
	16	0.39 a*	1.37 a	2.72 a	3.92 a	6.5 a	0.78 a*	2.07 a	4.3 a	6.14 a	10.24 a	13.3 a	1.21 a*	3.11 a	6.29 a	8.82 a	14.65 a	19.15 a
	24		0.8 a	2.27 a	3.49 a	6.11 a		1.39 a	3.7 a	5.56 a	9.7 a	12.76 a	0.3 a*	2.42 a	5.62 a	8.15 a	14 a	18.47 a
16	12	0.42 a*	1.39 a	2.74 a	3.94 a	6.51 a	0.82 a*	2.1 a	4.33 a	6.17 a	10.26 a	13.32 a	1.22 a*	3.06 a	6.1 a	8.54 a	14.17 a	18.63 a
	16		1.02 a	2.44 a	3.66 a	6.26 a	0.26 b*	1.66 a	3.94 a	5.79 a	9.91 a	12.97 a	0.64 a*	2.62 a	5.67 a	8.12 a	13.76 a	18.19 a
	24		0.28 c	1.86 b	3.09 a	5.75 a		0.77 b	3.16 a	5.03 a	9.21 a	12.27 a		1.74 a	4.82 a	7.28 a	12.94 a	17.33 a

See Combined Axial and Lateral Load Table Notes

20 psf Lateral Load

Wall Height (ft)	Spacing (in.) o.c.	800S250-(mils)					800S300-(mils)				800S350-(mils)			
		33 ksi	50 ksi				50 ksi				50 ksi			
		43	54	68	97	118	54	68	97	118	54	68	97	118
8	12	4.61 a	7.86 a	11.46 a	19.24 a	25.11 a	8.2 a	11.73 a	21.01 a	27.47 a	10.64 a	15.44 a	25.53 a	33.97 a
	16	4.49 a	7.75 a	11.33 a	19.11 a	24.97 a	8.08 a	11.61 a	20.87 a	27.33 a	10.51 a	15.31 a	25.38 a	33.82 a
	24	4.24 a	7.51 a	11.09 a	18.83 a	24.68 a	7.83 a	11.37 a	20.59 a	27.03 a	10.26 a	15.05 a	25.09 a	33.51 a
9	12	4.5 a	7.74 a	11.32 a	19.06 a	24.86 a	8.06 a	11.57 a	20.75 a	27.17 a	10.47 a	15.24 a	25.28 a	33.62 a
	16	4.34 a	7.59 a	11.16 a	18.89 a	24.67 a	7.91 a	11.42 a	20.58 a	26.99 a	10.3 a	15.07 a	25.1 a	33.43 a
	24	4.03 a	7.29 a	10.85 a	18.54 a	24.31 a	7.6 a	11.11 a	20.23 a	26.62 a	9.98 a	14.74 a	24.73 a	33.04 a
10	12	4.37 a	7.59 a	11.16 a	18.84 a	24.55 a	7.9 a	11.39 a	20.45 a	26.82 a	10.26 a	15 a	24.95 a	33.21 a
	16	4.18 a	7.41 a	10.97 a	18.63 a	24.33 a	7.71 a	11.2 a	20.23 a	26.6 a	10.07 a	14.8 a	24.72 a	32.98 a
	24	3.79 a	7.04 a	10.59 a	18.21 a	23.88 a	7.33 a	10.82 a	19.81 a	26.15 a	9.67 a	14.4 a	24.27 a	32.5 a
12	12	4.08 a	7.24 a	10.77 a	18.31 a	23.77 a	7.52 a	10.94 a	19.69 a	25.93 a	9.78 a	14.45 a	24.06 a	32.24 a
	16	3.8 a	6.98 a	10.5 a	18.01 a	23.45 a	7.25 a	10.67 a	19.39 a	25.62 a	9.51 a	14.16 a	23.74 a	31.91 a
	24	3.25 a	6.46 a	9.96 a	17.41 a	22.82 a	6.71 a	10.14 a	18.79 a	24.99 a	8.95 a	13.59 a	23.11 a	31.24 a
14	12	3.72 a	6.8 a	10.2 a	17.45 a	22.71 a	7.05 a	10.38 a	18.74 a	24.8 a	9.21 a	13.75 a	23 a	30.78 a
	16	3.35 a	6.46 a	9.84 a	17.05 a	22.3 a	6.69 a	10.02 a	18.34 a	24.38 a	8.84 a	13.38 a	22.58 a	30.34 a
	24	2.61 a	5.77 a	9.12 a	16.25 a	21.47 a	5.98 a	9.32 a	17.55 a	23.55 a	8.1 a	12.62 a	21.74 a	29.47 a
16	12	3.31 a	6.28 a	9.52 a	16.36 a	21.39 a	6.51 a	9.72 a	17.61 a	23.47 a	8.57 a	12.95 a	21.82 a	28.91 a
	16	2.84 a	5.85 a	9.06 a	15.87 a	20.87 a	6.06 a	9.27 a	17.11 a	22.94 a	8.1 a	12.48 a	21.29 a	28.37 a
	24	1.89 a	4.98 a	8.15 a	14.87 a	19.84 a	5.15 a	8.38 a	16.12 a	21.9 a	7.17 a	11.52 a	20.23 a	27.28 a

See Combined Axial and Lateral Load Table Notes



25 psf Lateral Load

Wall Height (ft)	Spacing (in.) o.c.	362S137-(mils)				362S162-(mils)					362S200-(mils)					362S250-(mils)			
		33 ksi		50 ksi		33 ksi		50 ksi			33 ksi		50 ksi			33 ksi	50 ksi		
		33	43	54	68	33	43	54	68	97	97	33	54	68	97	43	54	68	97
8	12	0.8 a	1.41 a	2.58 a	3.58 a	1.14 a	1.83 a	3.4 a	4.58 a	6.95 a	1.47 a	2.49 a	4.38 a	7.21 a	8.64 a	2.89 a	5.01 a	6.81 a	9.92 a
	16	0.53 b	1.14 a	2.36 a	3.39 a	0.84 a	1.54 a	3.16 a	4.37 a	6.73 a	1.14 a	2.17 a	4.11 a	6.88 a	8.41 a	2.54 a	4.71 a	6.52 a	9.65 a
	24		0.58 c	1.92 b	3 a	0.24 c	0.97 b	2.67 a	3.93 a	6.28 a	0.48 c	1.53 a	3.55 a	6.23 a	7.94 a	1.85 a	4.11 a	5.93 a	9.11 a
9	12	0.57 c	1.16 a	2.29 a	3.26 a	0.87 b	1.54 a	3.04 a	4.16 a	6.34 a	1.17 a	2.15 a	3.92 a	6.55 a	7.88 a	2.54 a	4.56 a	6.16 a	9.06 a
	16	0.23 d	0.82 c	2.02 b	3.03 a	0.5 c	1.19 b	2.75 a	3.89 a	6.08 a	0.76 c	1.76 a	3.59 a	6.16 a	7.61 a	2.11 a	4.2 a	5.81 a	8.74 a
	24		0.14 d	1.49 d	2.56 c		0.49 d	2.16 c	3.37 b	5.56 a		0.98 c	2.93 b	5.39 a	7.06 a	1.26 b	3.47 a	5.11 a	8.1 a
10	12	0.32 d	0.89 c	1.98 b	2.9 a	0.59 c	1.16 b	2.66 a	3.7 a	5.69 a	0.85 c	1.79 a	3.44 a	5.82 a	7.08 a	2.16 a	4.08 a	5.48 a	8.17 a
	16		0.48 d	1.67 c	2.64 b	0.15 d	0.78 d	2.32 c	3.4 a	5.39 a	0.37 d	1.33 c	3.06 b	5.37 a	6.77 a	1.65 b	3.65 a	5.08 a	7.8 a
	24			1.05 e	2.1 d			1.65 d	2.8 c	4.8 b		0.41 d	2.29 d	4.49 c	6.14 a	0.64 d	2.8 c	4.28 b	7.07 a
12	12		0.32 e	1.36 d	2.18 c	0.01 e	0.65 d	1.86 d	2.76 c	4.35 a	0.2 e	1.06 d	2.44 c	4.32 b	5.45 a	1.34 c	2.94 b	4.11 a	6.35 a
	16			0.97 e	1.85 d		0.09 e	1.45 e	2.4 d	4 c		0.47 e	1.99 d	3.79 c	5.08 b	0.68 d	2.43 d	3.63 c	5.91 a
	24			0.2 f	1.19 e			0.63 f	1.68 e	3.29 d			1.07 e	2.74 e	4.35 d		1.4 e	2.68 d	5.04 c
14	12			0.79 e	1.52 e		0.04 f	1.17 e	1.95 e	3.23 d		0.36 e	1.6 e	3.05 d	4.1 c	0.55 e	1.96 d	2.95 c	4.8 b
	16			0.35 f	1.15 f			0.71 f	1.55 e	2.84 e			1.09 e	2.47 e	3.69 d		1.39 e	2.41 d	4.31 c
	24				0.39 f				0.74 f	2.06 f			0.07 f	1.3 f	2.88 e		0.24 f	1.35 e	3.35 e
16	12			0.32 f	0.98 f			0.62 f	1.31 f	2.34 e			0.93 f	2.06 e	3.05 d		1.18 e	2.03 e	3.58 d
	16				0.57 f			0.12 f	0.87 f	1.93 f			0.38 f	1.44 f	2.61 e		0.57 f	1.46 e	3.06 e
	24									1.09 f				0.19 f	1.74 f			0.31 f	2.02 f

25 psf Lateral Load

Wall Height (ft)	Spacing (in.) o.c.	362S300-(mils)			600S137-(mils)					600S162-(mils)						600S200-(mils)	
		50 ksi			33 ksi		50 ksi			33 ksi		50 ksi				33 ksi	
		54	68	97	33	43	54	68	97	33	43	54	68	97	118	33	43
8	12	5.08 a	7.28 a	11.16 a	1.36 a	2.11 a	3.47 a	4.71 a	7.23 a	2.01 a	2.99 a	5.2 a	7.05 a	10.96 a	13.79 a	2.39 a	3.79 a
	16	4.79 a	6.98 a	10.88 a	1.19 a	1.94 a	3.34 a	4.57 a	7.11 a	1.83 a	2.82 a	5.03 a	6.89 a	10.8 a	13.63 a	2.19 a	3.59 a
	24	4.2 a	6.38 a	10.33 a	0.84 a	1.61 a	3.06 a	4.31 a	6.87 a	1.47 a	2.47 a	4.7 a	6.58 a	10.47 a	13.29 a	1.79 a	3.18 a
9	12	4.64 a	6.64 a	10.36 a	1.22 a	1.98 a	3.36 a	4.6 a	7.14 a	1.85 a	2.85 a	5.06 a	6.92 a	10.83 a	13.66 a	2.22 a	3.6 a
	16	4.28 a	6.29 a	10.03 a	1.01 a	1.77 a	3.19 a	4.43 a	6.98 a	1.63 a	2.63 a	4.86 a	6.72 a	10.63 a	13.45 a	1.97 a	3.34 a
	24	3.56 a	5.57 a	9.37 a	0.57 a	1.35 a	2.85 a	4.09 a	6.68 a	1.17 a	2.2 a	4.44 a	6.33 a	10.21 a	13.03 a	1.47 a	2.83 a
10	12	4.17 a	5.99 a	9.38 a	1.07 a	1.83 a	3.24 a	4.48 a	7.03 a	1.68 a	2.68 a	4.9 a	6.78 a	10.69 a	13.51 a	2.02 a	3.38 a
	16	3.75 a	5.57 a	9 a	0.8 a	1.57 a	3.03 a	4.27 a	6.84 a	1.4 a	2.41 a	4.65 a	6.54 a	10.43 a	13.25 a	1.72 a	3.07 a
	24	2.91 c	4.74 a	8.24 a	0.26 b	1.05 a	2.61 a	3.86 a	6.46 a	0.85 a	1.88 a	4.13 a	6.05 a	9.93 a	12.73 a	1.11 a	2.44 a
12	12	3.25 b	4.69 a	7.36 a	0.72 a	1.49 a	2.96 a	4.21 a	6.78 a	1.29 a	2.28 a	4.43 a	6.33 a	10.35 a	13.17 a	1.58 a	2.88 a
	16	2.71 c	4.18 b	6.91 a	0.33 b	1.11 a	2.66 a	3.91 a	6.51 a	0.9 b	1.9 a	4.07 a	5.99 a	9.99 a	12.79 a	1.16 a	2.44 a
	24	1.62 e	3.14 d	6.01 b		0.36 c	2.05 b	3.31 a	5.97 a	0.12 d	1.15 b	3.35 a	5.3 a	9.26 a	12.04 a	0.3 c	1.56 b
14	12	2.28 d	3.44 c	5.64 a	0.3 c	1.08 b	2.63 a	3.88 a	6.49 a	0.84 c	1.81 a	3.85 a	5.68 a	9.64 a	12.76 a	1.08 b	2.3 a
	16	1.65 e	2.85 d	5.13 c		0.57 c	2.22 b	3.47 a	6.12 a	0.32 d	1.32 c	3.38 b	5.23 a	9.16 a	12.25 a	0.52 c	1.73 b
	24	0.38 f	1.68 e	4.13 d			1.39 d	2.66 c	5.38 b		0.32 d	2.45 d	4.33 c	8.2 a	11.23 a		0.58 d
16	12	1.42 e	2.4 d	4.27 c		0.61 d	2.25 c	3.51 b	6.15 a	0.35 d	1.29 c	3.19 b	4.91 a	8.54 a	11.37 a	0.54 d	1.68 c
	16	0.73 f	1.77 e	3.73 d			1.71 d	2.97 c	5.67 b		0.67 d	2.62 d	4.36 c	7.96 a	10.75 a		0.97 d
	24		0.5 f	2.64 e			0.63 e	1.91 e	4.71 d			1.49 e	3.27 d	6.79 c	9.52 b		

See Combined Axial and Lateral Load Table Notes

25 psf Lateral Load

Wall Height (ft)	Spacing (in.) o.c.	600S200-(mils)				600S250-(mils)					600S300-(mils)				600S350-(mils)			
		50 ksi				33 ksi	50 ksi				50 ksi				50 ksi			
		54	68	97	118	43	54	68	97	118	54	68	97	118	54	68	97	118
8	12	6.88 a	9.3 a	14.78 a	19.06 a	4.14 a	7.12 a	10.41 a	17.35 a	22.22 a	7.43 a	10.6 a	18.67 a	24.32 a	9.71 a	14.18 a	23.26 a	30.8 a
	16	6.68 a	9.1 a	14.59 a	18.86 a	3.93 a	6.93 a	10.19 a	17.11 a	21.98 a	7.23 a	10.39 a	18.43 a	24.08 a	9.5 a	13.95 a	23.01 a	30.54 a
	24	6.28 a	8.7 a	14.2 a	18.45 a	3.5 a	6.54 a	9.76 a	16.65 a	21.5 a	6.84 a	9.97 a	17.97 a	23.6 a	9.08 a	13.5 a	22.51 a	30.03 a
9	12	6.63 a	9.02 a	14.44 a	18.65 a	3.94 a	6.89 a	10.1 a	16.89 a	21.67 a	7.18 a	10.3 a	18.17 a	23.75 a	9.4 a	13.8 a	22.7 a	29.94 a
	16	6.38 a	8.77 a	14.2 a	18.4 a	3.67 a	6.64 a	9.83 a	16.59 a	21.37 a	6.94 a	10.04 a	17.89 a	23.45 a	9.14 a	13.52 a	22.39 a	29.63 a
	24	5.89 a	8.28 a	13.72 a	17.89 a	3.14 a	6.15 a	9.29 a	16.01 a	20.77 a	6.44 a	9.51 a	17.31 a	22.85 a	8.62 a	12.95 a	21.77 a	28.99 a
10	12	6.35 a	8.7 a	14.04 a	18.16 a	3.72 a	6.62 a	9.75 a	16.35 a	21.03 a	6.91 a	9.96 a	17.61 a	23.1 a	9.06 a	13.37 a	22.07 a	28.98 a
	16	6.05 a	8.4 a	13.75 a	17.86 a	3.39 a	6.32 a	9.42 a	16 a	20.67 a	6.61 a	9.64 a	17.27 a	22.74 a	8.74 a	13.03 a	21.7 a	28.6 a
	24	5.45 a	7.8 a	13.17 a	17.25 a	2.74 a	5.73 a	8.77 a	15.3 a	19.94 a	6.01 a	9 a	16.57 a	22.01 a	8.1 a	12.34 a	20.95 a	27.83 a
12	12	5.69 a	7.94 a	13.05 a	16.94 a	3.21 a	5.99 a	8.93 a	15.08 a	19.48 a	6.27 a	9.21 a	16.31 a	21.59 a	8.27 a	12.38 a	20.68 a	26.77 a
	16	5.28 a	7.53 a	12.65 a	16.52 a	2.75 a	5.58 a	8.48 a	14.6 a	18.99 a	5.85 a	8.76 a	15.83 a	21.1 a	7.84 a	11.91 a	20.16 a	26.25 a
	24	4.45 a	6.7 a	11.85 a	15.69 a	1.83 a	4.76 a	7.58 a	13.64 a	18 a	5.02 a	7.87 a	14.88 a	20.1 a	6.96 a	10.96 a	19.13 a	25.22 a
14	12	4.92 a	7.03 a	11.82 a	15.41 a	2.62 a	5.31 a	7.99 a	13.58 a	17.64 a	5.54 a	8.35 a	14.82 a	19.94 a	7.39 a	11.26 a	18.93 a	24.27 a
	16	4.39 a	6.5 a	11.31 a	14.88 a	2.02 a	4.77 a	7.41 a	12.97 a	17.01 a	5 a	7.77 a	14.21 a	19.3 a	6.83 a	10.65 a	18.27 a	23.62 a
	24	3.33 c	5.44 b	10.29 a	13.81 a	0.81 c	3.7 b	6.25 a	11.75 a	15.76 a	3.92 b	6.61 a	12.99 a	18.01 a	5.7 a	9.43 a	16.94 a	22.32 a
16	12	4.08 a	6.02 a	10.42 a	13.66 a	1.98 b	4.6 a	7 a	11.93 a	15.6 a	4.75 a	7.42 a	13.24 a	17.75 a	6.44 a	10.04 a	16.74 a	21.6 a
	16	3.44 c	5.38 b	9.81 a	13.02 a	1.22 c	3.93 b	6.29 a	11.2 a	14.86 a	4.09 b	6.7 a	12.5 a	16.98 a	5.75 a	9.29 a	15.95 a	20.83 a
	24	2.17 d	4.11 d	8.59 b	11.74 a		2.59 d	4.87 c	9.74 b	13.36 a	2.76 d	5.26 c	11.03 a	15.44 a	4.37 c	7.8 b	14.37 a	19.27 a

25 psf Lateral Load

Wall Height (ft)	Spacing (in.) o.c.	800S137-(mils)					800S162-(mils)						800S200-(mils)					
		33 ksi		50 ksi			33 ksi		50 ksi				33 ksi		50 ksi			
		33	43	54	68	97	33	43	54	68	97	118	33	43	54	68	97	118
8	12	1.36 a*	2.15 a	3.34 a	4.52 a	7.04 a	1.96 a*	3.02 a	5.13 a	6.95 a	10.98 a	14.05 a	2.5 a*	4.14 a	7.41 a	9.94 a	15.64 a	20.1 a
	16	1.22 a*	2.03 a	3.25 a	4.43 a	6.96 a	1.79 a*	2.88 a	5.01 a	6.83 a	10.88 a	13.94 a	2.32 a*	4 a	7.26 a	9.8 a	15.5 a	19.96 a
	24	0.93 a*	1.8 a	3.06 a	4.26 a	6.8 a	1.44 a*	2.6 a	4.76 a	6.59 a	10.66 a	13.72 a	1.94 a*	3.71 a	6.98 a	9.52 a	15.24 a	19.68 a
9	12	1.24 a*	2.06 a	3.27 a	4.45 a	6.98 a	1.83 a*	2.91 a	5.03 a	6.85 a	10.9 a	13.96 a	2.35 a*	4.03 a	7.29 a	9.83 a	15.53 a	19.99 a
	16	1.06 a*	1.91 a	3.15 a	4.34 a	6.87 a	1.61 a*	2.73 a	4.88 a	6.7 a	10.76 a	13.82 a	2.12 a*	3.85 a	7.12 a	9.65 a	15.36 a	19.81 a
	24	0.7 a*	1.62 a	2.92 a	4.12 a	6.67 a	1.17 a*	2.38 a	4.57 a	6.4 a	10.48 a	13.54 a	1.64 a*	3.48 a	6.76 a	9.3 a	15.02 a	19.46 a
10	12	1.12 a*	1.96 a	3.18 a	4.37 a	6.9 a	1.67 a*	2.79 a	4.92 a	6.75 a	10.8 a	13.86 a	2.19 a*	3.9 a	7.17 a	9.7 a	15.41 a	19.86 a
	16	0.89 a*	1.78 a	3.04 a	4.23 a	6.78 a	1.4 a*	2.57 a	4.73 a	6.56 a	10.63 a	13.69 a	1.89 a*	3.67 a	6.95 a	9.48 a	15.2 a	19.65 a
	24	0.45 a*	1.41 a	2.76 a	3.96 a	6.53 a	0.86 a*	2.13 a	4.35 a	6.19 a	10.29 a	13.35 a	1.31 a*	3.23 a	6.51 a	9.05 a	14.79 a	19.21 a
12	12	0.82 a*	1.72 a	3 a	4.19 a	6.74 a	1.31 a*	2.5 a	4.67 a	6.5 a	10.57 a	13.64 a	1.79 a*	3.59 a	6.87 a	9.41 a	15.14 a	19.58 a
	16	0.5 a*	1.46 a	2.79 a	3.99 a	6.56 a	0.92 a*	2.19 a	4.4 a	6.24 a	10.33 a	13.39 a	1.37 a*	3.27 a	6.55 a	9.1 a	14.84 a	19.26 a
	24		0.94 a	2.38 a	3.6 a	6.2 a	0.14 a*	1.56 a	3.85 a	5.7 a	9.84 a	12.9 a	0.53 a*	2.63 a	5.92 a	8.48 a	14.24 a	18.64 a
14	12	0.47 a*	1.44 a	2.77 a	3.98 a	6.55 a	0.89 a*	2.16 a	4.38 a	6.21 a	10.31 a	13.37 a	1.32 a*	3.19 a	6.38 a	8.91 a	14.73 a	19.24 a
	16	0.04 a*	1.08 a	2.49 a	3.71 a	6.3 a	0.36 a*	1.73 a	4 a	5.85 a	9.97 a	13.03 a	0.75 a*	2.76 a	5.96 a	8.49 a	14.32 a	18.81 a
	24		0.38 b	1.94 a	3.17 a	5.82 a		0.88 a	3.26 a	5.13 a	9.3 a	12.36 a		1.9 a	5.11 a	7.65 a	13.51 a	17.96 a
16	12	0.07 b*	1.11 a	2.52 a	3.73 a	6.32 a	0.4 a*	1.77 a	4.03 a	5.88 a	10 a	13.06 a	0.79 a*	2.73 a	5.78 a	8.23 a	13.86 a	18.3 a
	16		0.65 b	2.15 a	3.38 a	6.01 a		1.21 a	3.55 a	5.41 a	9.56 a	12.62 a	0.06 b*	2.18 a	5.25 a	7.7 a	13.35 a	17.76 a
	24			1.42 c	2.67 b	5.37 a		0.1 c	2.57 b	4.46 a	8.69 a	11.75 a		1.08 c	4.18 a	6.65 a	12.33 a	16.68 a

See Combined Axial and Lateral Load Table Notes

25 psf Lateral Load

Wall Height (ft)	Spacing (in.) o.c.	800S250-(mils)					800S300-(mils)				800S350-(mils)			
		33 ksi	50 ksi				50 ksi				50 ksi			
		43	54	68	97	118	54	68	97	118	54	68	97	118
8	12	4.52 a	7.78 a	11.36 a	19.14 a	25 a	8.11 a	11.64 a	20.9 a	27.36 a	10.55 a	15.34 a	25.42 a	33.86 a
	16	4.36 a	7.63 a	11.21 a	18.97 a	24.82 a	7.96 a	11.49 a	20.73 a	27.18 a	10.39 a	15.18 a	25.24 a	33.67 a
	24	4.05 a	7.33 a	10.9 a	18.63 a	24.46 a	7.65 a	11.18 a	20.38 a	26.82 a	10.06 a	14.85 a	24.87 a	33.28 a
9	12	4.38 a	7.63 a	11.2 a	18.93 a	24.72 a	7.95 a	11.46 a	20.62 a	27.04 a	10.34 a	15.11 a	25.14 a	33.48 a
	16	4.19 a	7.44 a	11.01 a	18.71 a	24.49 a	7.75 a	11.26 a	20.4 a	26.81 a	10.14 a	14.91 a	24.91 a	33.23 a
	24	3.79 a	7.07 a	10.62 a	18.28 a	24.04 a	7.36 a	10.88 a	19.96 a	26.35 a	9.74 a	14.49 a	24.45 a	32.75 a
10	12	4.23 a	7.45 a	11.02 a	18.69 a	24.38 a	7.76 a	11.25 a	20.29 a	26.65 a	10.12 a	14.85 a	24.78 a	33.03 a
	16	3.99 a	7.23 a	10.78 a	18.42 a	24.11 a	7.52 a	11.01 a	20.02 a	26.37 a	9.87 a	14.6 a	24.5 a	32.74 a
	24	3.5 a	6.77 a	10.3 a	17.89 a	23.55 a	7.05 a	10.54 a	19.49 a	25.81 a	9.37 a	14.1 a	23.93 a	32.15 a
12	12	3.87 a	7.05 a	10.57 a	18.09 a	23.53 a	7.32 a	10.74 a	19.47 a	25.69 a	9.57 a	14.23 a	23.82 a	31.99 a
	16	3.52 a	6.72 a	10.23 a	17.71 a	23.14 a	6.98 a	10.4 a	19.09 a	25.3 a	9.23 a	13.87 a	23.43 a	31.58 a
	24	2.83 a	6.07 a	9.55 a	16.96 a	22.35 a	6.31 a	9.74 a	18.34 a	24.51 a	8.53 a	13.16 a	22.63 a	30.74 a
14	12	3.44 a	6.54 a	9.93 a	17.15 a	22.4 a	6.78 a	10.11 a	18.44 a	24.49 a	8.94 a	13.47 a	22.69 a	30.45 a
	16	2.98 a	6.11 a	9.48 a	16.65 a	21.88 a	6.34 a	9.67 a	17.95 a	23.97 a	8.47 a	13 a	22.16 a	29.91 a
	24	2.05 a	5.25 a	8.58 a	15.66 a	20.85 a	5.44 a	8.79 a	16.96 a	22.93 a	7.55 a	12.05 a	21.11 a	28.81 a
16	12	2.96 a	5.96 a	9.18 a	15.99 a	21 a	6.17 a	9.39 a	17.24 a	23.07 a	8.22 a	12.6 a	21.42 a	28.5 a
	16	2.37 a	5.41 a	8.61 a	15.37 a	20.35 a	5.61 a	8.83 a	16.62 a	22.42 a	7.63 a	12 a	20.76 a	27.82 a
	24	1.18 b	4.32 a	7.47 a	14.12 a	19.06 a	4.47 a	7.72 a	15.38 a	21.12 a	6.47 a	10.81 a	19.43 a	26.47 a

See Combined Axial and Lateral Load Table Notes



30 psf Lateral Load

Wall Height (ft)	Spacing (in.) o.c.	362S137-(mils)				362S162-(mils)					362S200-(mils)					362S250-(mils)			
		33 ksi		50 ksi		33 ksi		50 ksi			33 ksi		50 ksi			33 ksi	50 ksi		
		33	43	54	68	33	43	54	68	97	97	33	54	68	97	43	54	68	97
8	12	0.63 b	1.25 a	2.45 a	3.47 a	0.96 a	1.66 a	3.25 a	4.45 a	6.82 a	1.27 a	2.3 a	4.22 a	7.01 a	8.5 a	2.68 a	4.83 a	6.64 a	9.76 a
	16	0.31 c	0.92 b	2.18 a	3.24 a	0.6 b	1.31 a	2.96 a	4.19 a	6.55 a	0.87 b	1.92 a	3.88 a	6.62 a	8.22 a	2.26 a	4.47 a	6.29 a	9.43 a
	24		0.25 d	1.65 c	2.77 b		0.63 c	2.38 b	3.67 a	6.02 a	0.08 d	1.15 b	3.22 a	5.84 a	7.66 a	1.43 b	3.75 a	5.58 a	8.78 a
9	12	0.36 c	0.96 b	2.13 a	3.12 a	0.65 c	1.33 a	2.86 a	4 a	6.19 a	0.93 b	1.92 a	3.72 a	6.32 a	7.72 a	2.28 a	4.35 a	5.95 a	8.87 a
	16		0.55 d	1.81 c	2.84 b	0.21 d	0.91 c	2.51 b	3.69 a	5.87 a	0.44 c	1.45 b	3.32 a	5.85 a	7.39 a	1.77 a	3.91 a	5.53 a	8.49 a
	24			1.17 d	2.29 d		0.07 d	1.82 d	3.06 c	5.24 a		0.51 d	2.53 c	4.92 b	6.73 a	0.75 c	3.04 b	4.7 a	7.72 a
10	12	0.07 e	0.65 d	1.79 c	2.74 b	0.33 d	0.93 c	2.45 b	3.52 a	5.51 a	0.56 c	1.52 b	3.21 a	5.55 a	6.89 a	1.86 a	3.82 a	5.24 a	7.95 a
	16		0.16 e	1.42 d	2.42 c		0.47 d	2.05 c	3.16 b	5.15 a		0.96 d	2.75 c	5.02 b	6.52 a	1.25 c	3.31 b	4.76 a	7.51 a
	24			0.68 e	1.77 e			1.24 e	2.44 d	4.44 c			1.84 d	3.96 d	5.77 b	0.03 d	2.29 d	3.81 c	6.64 a
12	12			1.13 e	1.98 d		0.32 e	1.61 d	2.54 d	4.14 b		0.7 d	2.17 d	4 c	5.23 a	0.94 d	2.63 c	3.82 b	6.09 a
	16			0.66 e	1.58 e			1.12 e	2.11 e	3.72 d			1.62 e	3.37 d	4.79 c	0.16 e	2.02 d	3.25 c	5.56 b
	24				0.79 f			0.14 f	1.24 f	2.87 e			0.53 f	2.11 e	3.9 d		0.79 e	2.11 e	4.52 d
14	12			0.53 f	1.3 e			0.9 f	1.71 e	3 d			1.29 e	2.7 e	3.86 d	0.08 e	1.61 e	2.63 d	4.51 c
	16				0.84 f			0.35 f	1.22 f	2.53 e			0.68 f	2 e	3.37 e		0.93 e	1.99 e	3.93 d
	24								0.25 f	1.59 f				0.6 f	2.39 f		-0.44 f	0.72 f	2.77 e
16	12			0.03 f	0.73 f			0.32 f	1.04 f	2.09 e			0.6 f	1.69 f	2.79 e		0.81 f	1.68 e	3.27 d
	16				0.24 f				0.52 f	1.59 f				0.94 f	2.27 f		0.07 f	1 f	2.65 e
	24									0.59 f					1.22 f				1.4 f

30 psf Lateral Load

Wall Height (ft)	Spacing (in.) o.c.	362S300-(mils)			600S137-(mils)					600S162-(mils)						600S200-(mils)	
		50 ksi			33 ksi		50 ksi			33 ksi		50 ksi				33 ksi	
		54	68	97	33	43	54	68	97	33	43	54	68	97	118	33	43
8	12	4.9 a	7.1 a	10.99 a	1.26 a	2.01 a	3.39 a	4.63 a	7.16 a	1.9 a	2.89 a	5.1 a	6.95 a	10.86 a	13.69 a	2.27 a	3.67 a
	16	4.55 a	6.74 a	10.66 a	1.05 a	1.81 a	3.23 a	4.47 a	7.02 a	1.68 a	2.68 a	4.9 a	6.76 a	10.67 a	13.49 a	2.03 a	3.42 a
	24	3.84 a	6.02 a	10 a	0.64 a	1.41 a	2.9 a	4.15 a	6.73 a	1.25 a	2.27 a	4.5 a	6.39 a	10.28 a	13.09 a	1.56 a	2.93 a
9	12	4.42 a	6.43 a	10.16 a	1.09 a	1.85 a	3.26 a	4.5 a	7.04 a	1.72 a	2.72 a	4.94 a	6.8 a	10.71 a	13.54 a	2.07 a	3.45 a
	16	3.99 a	6 a	9.77 a	0.83 a	1.6 a	3.05 a	4.3 a	6.86 a	1.45 a	2.46 a	4.69 a	6.56 a	10.46 a	13.28 a	1.77 a	3.14 a
	24	3.14 b	5.13 a	8.97 a	0.31 a	1.09 a	2.64 a	3.89 a	6.5 a	0.9 a	1.94 a	4.19 a	6.09 a	9.97 a	12.78 a	1.17 a	2.52 a
10	12	3.91 a	5.74 a	9.15 a	0.91 a	1.67 a	3.12 a	4.36 a	6.92 a	1.52 a	2.52 a	4.75 a	6.63 a	10.53 a	13.36 a	1.84 a	3.19 a
	16	3.41 a	5.24 a	8.7 a	0.59 a	1.36 a	2.86 a	4.11 a	6.69 a	1.18 a	2.2 a	4.44 a	6.34 a	10.23 a	13.04 a	1.48 a	2.81 a
	24	2.41 c	4.24 b	7.79 a		0.74 a	2.35 a	3.61 a	6.24 a	0.52 b	1.56 a	3.82 a	5.75 a	9.62 a	12.42 a	0.74 a	2.06 a
12	12	2.92 c	4.38 a	7.09 a	0.48 b	1.26 a	2.78 a	4.03 a	6.62 a	1.05 a	2.05 a	4.21 a	6.13 a	10.13 a	12.94 a	1.33 a	2.61 a
	16	2.27 d	3.76 c	6.55 a	0.02 c	0.81 b	2.41 a	3.67 a	6.29 a	0.58 c	1.6 a	3.78 a	5.71 a	9.69 a	12.49 a	0.81 b	2.09 a
	24	0.97 e	2.52 d	5.47 c			1.68 c	2.95 b	5.64 a		0.7 c	2.92 b	4.88 a	8.82 a	11.59 a		1.03 c
14	12	1.9 e	3.09 d	5.34 b		0.78 c	2.38 b	3.64 a	6.27 a	0.53 c	1.51 b	3.57 a	5.41 a	9.35 a	12.46 a	0.75 c	1.96 a
	16	1.14 e	2.39 e	4.73 d		0.17 d	1.89 c	3.15 b	5.82 a		0.92 d	3.01 c	4.87 a	8.77 a	11.84 a	0.07 d	1.27 c
	24		0.98 f	3.52 e			0.89 e	2.17 d	4.94 c			1.89 d	3.79 c	7.62 b	10.62 a		
16	12	1 f	2.02 e	3.95 d		0.21 d	1.93 d	3.19 c	5.86 a		0.92 d	2.85 c	4.58 b	8.19 a	11 a	0.12 d	1.25 c
	16	0.18 f	1.26 f	3.29 e			1.28 e	2.55 d	5.28 c		0.18 e	2.17 d	3.92 c	7.49 b	10.26 a		0.4 d
	24			1.99 f				1.27 e	4.13 d			0.81 e	2.61 e	6.09 d	8.78 c		

See Combined Axial and Lateral Load Table Notes

30 psf Lateral Load

Wall Height (ft)	Spacing (in.) o.c.	600S200-(mils)				600S250-(mils)					600S300-(mils)				600S350-(mils)			
		50 ksi				33 ksi	50 ksi				50 ksi				50 ksi			
		54	68	97	118	43	54	68	97	118	54	68	97	118	54	68	97	118
8	12	6.76 a	9.18 a	14.66 a	18.94 a	4.01 a	7.01 a	10.28 a	17.21 a	22.07 a	7.31 a	10.48 a	18.53 a	24.18 a	9.58 a	14.04 a	23.11 a	30.65 a
	16	6.52 a	8.94 a	14.43 a	18.69 a	3.76 a	6.77 a	10.02 a	16.93 a	21.79 a	7.07 a	10.22 a	18.25 a	23.89 a	9.33 a	13.77 a	22.81 a	30.34 a
	24	6.04 a	8.46 a	13.97 a	18.21 a	3.25 a	6.3 a	9.51 a	16.37 a	21.21 a	6.6 a	9.72 a	17.69 a	23.32 a	8.83 a	13.23 a	22.22 a	29.73 a
9	12	6.48 a	8.87 a	14.29 a	18.5 a	3.78 a	6.74 a	9.94 a	16.71 a	21.49 a	7.04 a	10.14 a	18 a	23.57 a	9.24 a	13.63 a	22.51 a	29.75 a
	16	6.19 a	8.58 a	14.01 a	18.2 a	3.46 a	6.45 a	9.61 a	16.36 a	21.13 a	6.74 a	9.82 a	17.66 a	23.21 a	8.93 a	13.29 a	22.14 a	29.37 a
	24	5.59 a	7.98 a	13.43 a	17.59 a	2.82 a	5.86 a	8.97 a	15.67 a	20.41 a	6.15 a	9.19 a	16.96 a	22.49 a	8.3 a	12.61 a	21.4 a	28.61 a
10	12	6.17 a	8.52 a	13.86 a	17.98 a	3.52 a	6.44 a	9.55 a	16.14 a	20.81 a	6.73 a	9.76 a	17.4 a	22.88 a	8.87 a	13.16 a	21.85 a	28.75 a
	16	5.81 a	8.16 a	13.51 a	17.61 a	3.13 a	6.08 a	9.16 a	15.72 a	20.38 a	6.37 a	9.38 a	16.99 a	22.45 a	8.48 a	12.75 a	21.4 a	28.29 a
	24	5.09 a	7.44 a	12.82 a	16.88 a	2.34 a	5.37 a	8.38 a	14.88 a	19.51 a	5.65 a	8.61 a	16.15 a	21.58 a	7.72 a	11.93 a	20.5 a	27.38 a
12	12	5.44 a	7.69 a	12.81 a	16.69 a	2.93 a	5.75 a	8.66 a	14.79 a	19.18 a	6.02 a	8.94 a	16.02 a	21.3 a	8.01 a	12.1 a	20.37 a	26.46 a
	16	4.95 a	7.2 a	12.33 a	16.19 a	2.38 a	5.25 a	8.12 a	14.22 a	18.59 a	5.52 a	8.41 a	15.45 a	20.7 a	7.49 a	11.53 a	19.75 a	25.84 a
	24	3.95 b	6.2 a	11.37 a	15.18 a	1.28 b	4.26 a	7.04 a	13.06 a	17.41 a	4.52 a	7.34 a	14.31 a	19.5 a	6.43 a	10.4 a	18.51 a	24.6 a
14	12	4.6 a	6.71 a	11.51 a	15.09 a	2.26 a	4.99 a	7.64 a	13.21 a	17.26 a	5.22 a	8 a	14.46 a	19.55 a	7.05 a	10.89 a	18.53 a	23.88 a
	16	3.97 b	6.08 a	10.9 a	14.45 a	1.53 b	4.34 a	6.95 a	12.48 a	16.51 a	4.57 a	7.31 a	13.72 a	18.78 a	6.37 a	10.16 a	17.74 a	23.1 a
	24	2.7 d	4.8 c	9.68 a	13.17 a	0.08 d	3.05 c	5.55 b	11.02 a	15.01 a	3.27 c	5.92 b	12.26 a	17.24 a	5.02 b	8.7 a	16.15 a	21.53 a
16	12	3.7 b	5.64 a	10.06 a	13.27 a	1.53 c	4.2 b	6.57 a	11.49 a	15.15 a	4.35 a	6.99 a	12.8 a	17.29 a	6.03 a	9.59 a	16.27 a	21.14 a
	16	2.94 d	4.87 c	9.32 a	12.51 a	0.62 d	3.39 c	5.72 b	10.62 a	14.26 a	3.56 c	6.12 b	11.91 a	16.36 a	5.2 b	8.7 a	15.32 a	20.21 a
	24	1.41 e	3.35 d	7.86 c	10.98 b		1.78 e	4.01 d	8.87 c	12.46 b	1.96 d	4.4 d	10.14 b	14.52 a	3.54 d	6.9 c	13.43 a	18.34 a

30 psf Lateral Load

Wall Height (ft)	Spacing (in.) o.c.	800S137-(mils)					800S162-(mils)						800S200-(mils)					
		33 ksi		50 ksi			33 ksi		50 ksi				33 ksi		50 ksi			
		33	43	54	68	97	33	43	54	68	97	118	33	43	54	68	97	118
8	12	1.27 a*	2.08 a	3.28 a	4.47 a	6.99 a	1.86 a*	2.94 a	5.06 a	6.88 a	10.92 a	13.98 a	2.39 a*	4.06 a	7.32 a	9.85 a	15.56 a	20.02 a
	16	1.1 a*	1.94 a	3.17 a	4.36 a	6.9 a	1.65 a*	2.77 a	4.91 a	6.73 a	10.79 a	13.85 a	2.16 a*	3.88 a	7.15 a	9.69 a	15.4 a	19.85 a
	24	0.76 a*	1.67 a	2.96 a	4.15 a	6.7 a	1.23 a*	2.44 a	4.62 a	6.45 a	10.53 a	13.59 a	1.71 a*	3.54 a	6.81 a	9.35 a	15.08 a	19.51 a
9	12	1.14 a*	1.97 a	3.2 a	4.38 a	6.91 a	1.69 a*	2.8 a	4.94 a	6.76 a	10.81 a	13.88 a	2.21 a*	3.92 a	7.19 a	9.72 a	15.43 a	19.88 a
	16	0.92 a*	1.8 a	3.06 a	4.25 a	6.79 a	1.43 a*	2.59 a	4.76 a	6.58 a	10.65 a	13.71 a	1.93 a*	3.7 a	6.97 a	9.51 a	15.23 a	19.67 a
	24	0.48 a*	1.45 a	2.78 a	3.98 a	6.55 a	0.9 a*	2.17 a	4.39 a	6.22 a	10.32 a	13.38 a	1.35 a*	3.26 a	6.54 a	9.09 a	14.82 a	19.25 a
10	12	0.98 a*	1.85 a	3.1 a	4.29 a	6.83 a	1.51 a*	2.66 a	4.81 a	6.64 a	10.7 a	13.76 a	2.01 a*	3.76 a	7.04 a	9.57 a	15.29 a	19.73 a
	16	0.72 a*	1.63 a	2.93 a	4.12 a	6.68 a	1.18 a*	2.39 a	4.58 a	6.41 a	10.49 a	13.55 a	1.66 a*	3.49 a	6.77 a	9.31 a	15.04 a	19.47 a
	24	0.18 a*	1.2 a	2.59 a	3.79 a	6.38 a	0.53 a*	1.87 a	4.12 a	5.97 a	10.08 a	13.14 a	0.95 a*	2.96 a	6.24 a	8.79 a	14.54 a	18.95 a
12	12	0.63 a*	1.56 a	2.87 a	4.07 a	6.63 a	1.08 a*	2.31 a	4.51 a	6.34 a	10.43 a	13.49 a	1.54 a*	3.4 a	6.68 a	9.23 a	14.96 a	19.39 a
	16	0.24 a*	1.25 a	2.63 a	3.83 a	6.42 a	0.61 a*	1.94 a	4.18 a	6.02 a	10.13 a	13.19 a	1.03 a*	3.01 a	6.3 a	8.85 a	14.6 a	19.01 a
	24		0.63 a	2.13 a	3.36 a	5.99 a		1.19 a	3.52 a	5.38 a	9.54 a	12.6 a	0.02 a*	2.24 a	5.54 a	8.1 a	13.88 a	18.26 a
14	12	0.21 a*	1.22 a	2.61 a	3.81 a	6.4 a	0.57 a*	1.9 a	4.15 a	6 a	10.11 a	13.17 a	0.98 a*	2.93 a	6.12 a	8.66 a	14.48 a	18.98 a
	16		0.8 a	2.27 a	3.49 a	6.11 a		1.39 a	3.7 a	5.56 a	9.7 a	12.76 a	0.3 a*	2.42 a	5.62 a	8.15 a	14 a	18.47 a
	24			1.6 b	2.84 a	5.52 a		0.37 b	2.81 a	4.69 a	8.9 a	11.96 a		1.38 a	4.61 a	7.15 a	13.03 a	17.44 a
16	12		0.84 a	2.3 a	3.52 a	6.13 a		1.44 a	3.74 a	5.6 a	9.74 a	12.8 a	0.35 a*	2.4 a	5.46 a	7.91 a	13.56 a	17.98 a
	16		0.28 c	1.86 b	3.09 a	5.75 a		0.77 b	3.16 a	5.03 a	9.21 a	12.27 a		1.74 a	4.82 a	7.28 a	12.94 a	17.33 a
	24			0.98 d	2.25 c	4.99 a			1.99 c	3.89 b	8.16 a	11.22 a		0.42 c	3.55 b	6.01 a	11.72 a	16.03 a

See Combined Axial and Lateral Load Table Notes

30 psf Lateral Load

Wall Height (ft)	Spacing (in.) o.c.	800S250-(mils)					800S300-(mils)				800S350-(mils)			
		33 ksi	50 ksi				50 ksi				50 ksi			
		43	54	68	97	118	54	68	97	118	54	68	97	118
8	12	4.43 a	7.69 a	11.27 a	19.04 a	24.89 a	8.02 a	11.55 a	20.8 a	27.25 a	10.45 a	15.24 a	25.31 a	33.74 a
	16	4.24 a	7.51 a	11.09 a	18.83 a	24.68 a	7.83 a	11.37 a	20.59 a	27.03 a	10.26 a	15.05 a	25.09 a	33.51 a
	24	3.86 a	7.16 a	10.72 a	18.42 a	24.25 a	7.46 a	11 a	20.17 a	26.6 a	9.87 a	14.65 a	24.65 a	33.05 a
9	12	4.26 a	7.51 a	11.08 a	18.8 a	24.58 a	7.83 a	11.34 a	20.49 a	26.9 a	10.22 a	14.99 a	25 a	33.33 a
	16	4.03 a	7.29 a	10.85 a	18.54 a	24.31 a	7.6 a	11.11 a	20.23 a	26.62 a	9.98 a	14.74 a	24.73 a	33.04 a
	24	3.55 a	6.85 a	10.38 a	18.02 a	23.77 a	7.13 a	10.65 a	19.7 a	26.08 a	9.49 a	14.25 a	24.17 a	32.46 a
10	12	4.08 a	7.32 a	10.87 a	18.53 a	24.22 a	7.62 a	11.11 a	20.13 a	26.48 a	9.97 a	14.7 a	24.61 a	32.86 a
	16	3.79 a	7.04 a	10.59 a	18.21 a	23.88 a	7.33 a	10.82 a	19.81 a	26.15 a	9.67 a	14.4 a	24.27 a	32.5 a
	24	3.21 a	6.5 a	10.01 a	17.57 a	23.22 a	6.76 a	10.26 a	19.17 a	25.48 a	9.07 a	13.79 a	23.59 a	31.8 a
12	12	3.66 a	6.85 a	10.36 a	17.86 a	23.3 a	7.12 a	10.54 a	19.24 a	25.46 a	9.37 a	14.02 a	23.58 a	31.74 a
	16	3.25 a	6.46 a	9.96 a	17.41 a	22.82 a	6.71 a	10.14 a	18.79 a	24.99 a	8.95 a	13.59 a	23.11 a	31.24 a
	24	2.42 a	5.69 a	9.14 a	16.51 a	21.88 a	5.9 a	9.34 a	17.89 a	24.04 a	8.11 a	12.73 a	22.15 a	30.24 a
14	12	3.17 a	6.28 a	9.66 a	16.85 a	22.09 a	6.52 a	9.85 a	18.14 a	24.17 a	8.66 a	13.19 a	22.37 a	30.13 a
	16	2.61 a	5.77 a	9.12 a	16.25 a	21.47 a	5.98 a	9.32 a	17.55 a	23.55 a	8.1 a	12.62 a	21.74 a	29.47 a
	24	1.5 a	4.74 a	8.04 a	15.06 a	20.23 a	4.9 a	8.26 a	16.36 a	22.3 a	7 a	11.49 a	20.48 a	28.16 a
16	12	2.6 a	5.63 a	8.83 a	15.62 a	20.61 a	5.83 a	9.05 a	16.86 a	22.68 a	7.87 a	12.24 a	21.02 a	28.1 a
	16	1.89 a	4.98 a	8.15 a	14.87 a	19.84 a	5.15 a	8.38 a	16.12 a	21.9 a	7.17 a	11.52 a	20.23 a	27.28 a
	24	0.47 c	3.67 b	6.79 a	13.38 a	18.28 a	3.79 a	7.05 a	14.63 a	20.34 a	5.77 a	10.09 a	18.64 a	25.65 a

See Combined Axial and Lateral Load Table Notes



35 psf Lateral Load

Wall Height (ft)	Spacing (in.) o.c.	362S137-(mils)				362S162-(mils)					362S200-(mils)					362S250-(mils)			
		33 ksi		50 ksi		33 ksi		50 ksi			33 ksi		50 ksi			33 ksi	50 ksi		
		33	43	54	68	33	43	54	68	97	97	33	54	68	97	43	54	68	97
8	12	0.47 b	1.08 a	2.32 a	3.35 a	0.78 b	1.49 a	3.11 a	4.32 a	6.68 a	1.07 a	2.11 a	4.05 a	6.82 a	8.36 a	2.47 a	4.65 a	6.46 a	9.59 a
	16	0.09 d	0.69 c	2.01 b	3.08 a	0.36 c	1.09 b	2.77 a	4.02 a	6.37 a	0.61 b	1.66 a	3.66 a	6.36 a	8.04 a	1.99 a	4.23 a	6.05 a	9.21 a
	24			1.39 d	2.54 c		0.28 d	2.09 c	3.4 b	5.75 a		0.76 c	2.88 b	5.46 a	7.38 a	1.02 b	3.39 a	5.23 a	8.46 a
9	12	0.16 d	0.75 c	1.97 b	2.98 a	0.43 c	1.12 b	2.69 a	3.84 a	6.03 a	0.68 c	1.68 a	3.52 a	6.08 a	7.55 a	2.02 a	4.13 a	5.74 a	8.68 a
	16		0.27 d	1.6 c	2.66 b		0.63 d	2.28 c	3.48 b	5.66 a	0.11 d	1.14 c	3.06 b	5.54 a	7.17 a	1.43 b	3.62 a	5.25 a	8.23 a
	24			0.85 e	2.01 d			1.47 d	2.75 d	4.93 b		0.04 d	2.13 d	4.46 c	6.4 a	0.24 d	2.6 c	4.28 b	7.34 a
10	12		0.4 d	1.61 c	2.58 c	0.07 e	0.7 d	2.25 c	3.34 b	5.33 a	0.27 d	1.24 c	2.98 b	5.29 a	6.7 a	1.55 b	3.57 a	5 a	7.73 a
	16			1.17 d	2.2 d		0.16 e	1.78 d	2.92 c	4.91 b		0.6 d	2.45 c	4.67 b	6.27 a	0.84 d	2.97 c	4.44 b	7.22 a
	24			0.3 e	1.45 e			0.84 e	2.08 e	4.08 d			1.38 e	3.43 d	5.39 c		1.78 d	3.33 d	6.2 b
12	12			0.9 e	1.78 e			1.37 e	2.33 d	3.93 c		0.35 e	1.9 d	3.69 d	5.01 b	0.55 d	2.33 d	3.54 c	5.83 a
	16			0.35 f	1.32 e			0.8 e	1.82 e	3.43 d			1.26 e	2.95 e	4.49 d		1.61 e	2.87 d	5.22 c
	24				0.39 f				0.81 f	2.44 e				1.48 f	3.46 e		0.18 f	1.54 e	4 d
14	12			0.26 f	1.07 f			0.62 f	1.47 e	2.76 e			0.99 e	2.35 e	3.61 d		1.27 e	2.31 e	4.22 d
	16				0.54 f				0.9 f	2.21 e			0.27 f	1.54 f	3.04 e		0.47 f	1.57 e	3.54 e
	24									1.12 f					1.91 f			0.08 f	2.19 f
16	12				0.49 f			0.02 f	0.78 f	1.84 f			0.27 f	1.31 f	2.53 e		0.44 f	1.34 f	2.96 e
	16								0.17 f	1.26 f				0.44 f	1.92 f			0.54 f	2.23 f
	24									0.09					0.7 f				0.78 f

35 psf Lateral Load

Wall Height (ft)	Spacing (in.) o.c.	362S300-(mils)			600S137-(mils)					600S162-(mils)						600S200-(mils)	
		50 ksi			33 ksi		50 ksi			33 ksi		50 ksi				33 ksi	
		54	68	97	33	43	54	68	97	33	43	54	68	97	118	33	43
8	12	4.73 a	6.92 a	10.83 a	1.15 a	1.91 a	3.31 a	4.55 a	7.09 a	1.79 a	2.78 a	5 a	6.86 a	10.77 a	13.59 a	2.15 a	3.55 a
	16	4.31 a	6.5 a	10.44 a	0.91 a	1.68 a	3.12 a	4.36 a	6.92 a	1.54 a	2.54 a	4.77 a	6.64 a	10.54 a	13.36 a	1.87 a	3.26 a
	24	3.49 a	5.66 a	9.67 a	0.43 a	1.21 a	2.74 a	3.99 a	6.58 a	1.04 a	2.06 a	4.3 a	6.2 a	10.08 a	12.89 a	1.32 a	2.68 a
9	12	4.21 a	6.21 a	9.96 a	0.96 a	1.72 a	3.16 a	4.4 a	6.95 a	1.58 a	2.59 a	4.81 a	6.68 a	10.58 a	13.41 a	1.92 a	3.29 a
	16	3.71 a	5.71 a	9.5 a	0.66 a	1.43 a	2.92 a	4.16 a	6.74 a	1.27 a	2.28 a	4.52 a	6.41 a	10.3 a	13.11 a	1.57 a	2.93 a
	24	2.71 c	4.7 a	8.58 a	0.05 b	0.84 a	2.44 a	3.69 a	6.31 a	0.63 a	1.67 a	3.94 a	5.85 a	9.72 a	12.52 a	0.87 a	2.21 a
10	12	3.66 a	5.49 a	8.92 a	0.75 a	1.52 a	2.99 a	4.23 a	6.8 a	1.35 a	2.36 a	4.59 a	6.49 a	10.38 a	13.2 a	1.66 a	3 a
	16	3.08 b	4.91 a	8.39 a	0.37 a	1.15 a	2.69 a	3.94 a	6.54 a	0.96 a	1.98 a	4.23 a	6.14 a	10.03 a	12.84 a	1.23 a	2.56 a
	24	1.9 d	3.74 c	7.34 a		0.43 b	2.1 a	3.36 a	6.01 a	0.18 c	1.24 a	3.51 a	5.46 a	9.32 a	12.11 a	0.38 b	1.68 a
12	12	2.6 c	4.07 b	6.82 a	0.25 c	1.04 a	2.6 a	3.85 a	6.46 a	0.82 b	1.83 a	3.99 a	5.92 a	9.91 a	12.72 a	1.07 a	2.35 a
	16	1.84 d	3.35 d	6.19 b		0.51 c	2.17 b	3.43 a	6.08 a	0.27 c	1.3 b	3.49 a	5.43 a	9.4 a	12.19 a	0.47 c	1.73 a
	24	0.32 e	1.9 e	4.93 d			1.32 d	2.59 c	5.32 a		0.24 d	2.49 c	4.47 b	8.38 a	11.14 a		0.5 c
14	12	1.52 e	2.74 d	5.03 c		0.47 d	2.14 c	3.39 a	6.05 a	0.22 d	1.22 c	3.29 b	5.14 a	9.06 a	12.15 a	0.41 c	1.61 b
	16	0.63 f	1.92 e	4.33 d			1.55 d	2.82 c	5.53 a		0.52 d	2.64 c	4.51 b	8.39 a	11.43 a		0.81 d
	24		0.28 f	2.92 e			0.39 e	1.68 d	4.5 c			1.33 e	3.26 d	7.04 c	10 b		
16	12	0.59 f	1.64 e	3.62 d			1.6 d	2.87 c	5.57 b		0.55 d	2.51 d	4.25 c	7.84 a	10.63 a		0.83 d
	16		0.75 f	2.86 e			0.84 e	2.12 d	4.9 c			1.71 e	3.49 d	7.02 c	9.76 b		
	24			1.34 f				0.63 e	3.55 e			0.13 f	1.96 e	5.39 d	8.04 d		

See Combined Axial and Lateral Load Table Notes

35 psf Lateral Load

Wall Height (ft)	Spacing (in.) o.c.	600S200-(mils)				600S250-(mils)					600S300-(mils)				600S350-(mils)			
		50 ksi				33 ksi	50 ksi				50 ksi				50 ksi			
		54	68	97	118	43	54	68	97	118	54	68	97	118	54	68	97	118
8	12	6.64 a	9.06 a	14.55 a	18.82 a	3.88 a	6.89 a	10.15 a	17.07 a	21.93 a	7.19 a	10.35 a	18.39 a	24.04 a	9.46 a	13.91 a	22.96 a	30.49 a
	16	6.36 a	8.78 a	14.28 a	18.53 a	3.59 a	6.62 a	9.85 a	16.74 a	21.59 a	6.92 a	10.05 a	18.06 a	23.7 a	9.16 a	13.59 a	22.61 a	30.13 a
	24	5.81 a	8.22 a	13.74 a	17.97 a	2.99 a	6.07 a	9.25 a	16.09 a	20.92 a	6.36 a	9.46 a	17.42 a	23.03 a	8.58 a	12.96 a	21.92 a	29.42 a
9	12	6.33 a	8.72 a	14.15 a	18.35 a	3.62 a	6.59 a	9.78 a	16.54 a	21.31 a	6.89 a	9.98 a	17.83 a	23.39 a	9.09 a	13.46 a	22.33 a	29.56 a
	16	5.99 a	8.38 a	13.82 a	17.99 a	3.24 a	6.25 a	9.4 a	16.13 a	20.89 a	6.54 a	9.61 a	17.43 a	22.97 a	8.72 a	13.06 a	21.89 a	29.12 a
	24	5.29 a	7.68 a	13.15 a	17.29 a	2.5 a	5.57 a	8.65 a	15.32 a	20.05 a	5.85 a	8.88 a	16.62 a	22.14 a	7.99 a	12.27 a	21.03 a	28.23 a
10	12	5.99 a	8.34 a	13.69 a	17.8 a	3.32 a	6.26 a	9.36 a	15.93 a	20.59 a	6.55 a	9.57 a	17.2 a	22.66 a	8.67 a	12.96 a	21.62 a	28.52 a
	16	5.57 a	7.92 a	13.28 a	17.37 a	2.87 a	5.85 a	8.9 a	15.44 a	20.09 a	6.13 a	9.12 a	16.71 a	22.16 a	8.23 a	12.48 a	21.1 a	27.99 a
	24	4.73 a	7.08 a	12.47 a	16.51 a	1.95 a	5.01 a	7.99 a	14.46 a	19.07 a	5.29 a	8.23 a	15.73 a	21.14 a	7.34 a	11.52 a	20.05 a	26.92 a
12	12	5.2 a	7.44 a	12.57 a	16.44 a	2.66 a	5.5 a	8.39 a	14.5 a	18.89 a	5.77 a	8.67 a	15.74 a	21 a	7.75 a	11.82 a	20.06 a	26.15 a
	16	4.62 a	6.86 a	12.01 a	15.85 a	2.01 a	4.92 a	7.76 a	13.83 a	18.2 a	5.19 a	8.05 a	15.07 a	20.3 a	7.13 a	11.15 a	19.33 a	25.42 a
	24	3.46 b	5.7 a	10.89 a	14.68 a	0.73 c	3.77 b	6.5 a	12.49 a	16.81 a	4.02 a	6.81 a	13.74 a	18.91 a	5.91 a	9.83 a	17.89 a	23.98 a
14	12	4.28 a	6.39 a	11.21 a	14.77 a	1.9 a	4.66 a	7.29 a	12.85 a	16.89 a	4.89 a	7.66 a	14.09 a	19.17 a	6.71 a	10.53 a	18.13 a	23.49 a
	16	3.54 c	5.65 b	10.49 a	14.02 a	1.05 c	3.91 b	6.48 a	11.99 a	16.01 a	4.14 b	6.84 a	13.24 a	18.27 a	5.92 a	9.67 a	17.21 a	22.58 a
	24	2.07 d	4.17 d	9.07 b	12.53 a	-0.65 d	2.41 d	4.86 c	10.29 a	14.26 a	2.63 d	5.22 b	11.53 a	16.47 a	4.34 c	7.96 a	15.35 a	20.75 a
16	12	3.32 c	5.25 b	9.69 a	12.89 a	1.07 c	3.8 c	6.15 a	11.06 a	14.71 a	3.95 b	6.55 a	12.36 a	16.82 a	5.61 a	9.14 a	15.8 a	20.67 a
	16	2.43 d	4.36 c	8.83 b	12 a	0.01 d	2.86 d	5.15 c	10.03 a	13.66 a	3.02 d	5.55 b	11.32 a	15.75 a	4.65 c	8.1 a	14.69 a	19.58 a
	24	0.65 e	2.58 e	7.13 d	10.21 c	-2.11 e	0.98 e	3.16 d	7.99 c	11.57 b	1.17 e	3.54 d	9.25 c	13.6 b	2.71 d	6 c	12.48 b	17.41 a

35 psf Lateral Load

Wall Height (ft)	Spacing (in.) o.c.	800S137-(mils)					800S162-(mils)						800S200-(mils)					
		33 ksi		50 ksi			33 ksi		50 ksi				33 ksi		50 ksi			
		33	43	54	68	97	33	43	54	68	97	118	33	43	54	68	97	118
8	12	1.19 a*	2.01 a	3.23 a	4.42 a	6.94 a	1.76 a*	2.85 a	4.98 a	6.8 a	10.85 a	13.91 a	2.28 a*	3.97 a	7.24 a	9.77 a	15.48 a	19.93 a
	16	0.99 a*	1.85 a	3.1 a	4.29 a	6.83 a	1.51 a*	2.66 a	4.81 a	6.64 a	10.7 a	13.76 a	2.01 a*	3.77 a	7.04 a	9.57 a	15.29 a	19.74 a
	24	0.59 a*	1.53 a	2.85 a	4.05 a	6.61 a	1.03 a*	2.27 a	4.47 a	6.31 a	10.39 a	13.45 a	1.49 a*	3.37 a	6.64 a	9.19 a	14.92 a	19.35 a
9	12	1.03 a*	1.88 a	3.13 a	4.32 a	6.85 a	1.56 a*	2.7 a	4.85 a	6.67 a	10.73 a	13.79 a	2.07 a*	3.81 a	7.08 a	9.61 a	15.33 a	19.78 a
	16	0.77 a*	1.68 a	2.97 a	4.16 a	6.71 a	1.25 a*	2.45 a	4.63 a	6.46 a	10.54 a	13.6 a	1.74 a*	3.55 a	6.83 a	9.37 a	15.09 a	19.53 a
	24	0.27 a*	1.27 a	2.64 a	3.85 a	6.43 a	0.64 a*	1.96 a	4.2 a	6.04 a	10.15 a	13.21 a	1.07 a*	3.04 a	6.33 a	8.88 a	14.62 a	19.04 a
10	12	0.85 a*	1.74 a	3.01 a	4.21 a	6.76 a	1.35 a*	2.52 a	4.7 a	6.53 a	10.6 a	13.66 a	1.83 a*	3.63 a	6.9 a	9.44 a	15.16 a	19.6 a
	16	0.54 a*	1.49 a	2.81 a	4.01 a	6.58 a	0.97 a*	2.22 a	4.43 a	6.27 a	10.36 a	13.42 a	1.42 a*	3.32 a	6.59 a	9.14 a	14.87 a	19.3 a
	24		0.98 a	2.41 a	3.63 a	6.23 a	0.21 a*	1.61 a	3.9 a	5.75 a	9.88 a	12.94 a	0.6 a*	2.69 a	5.98 a	8.53 a	14.29 a	18.69 a
12	12	0.44 a*	1.41 a	2.75 a	3.95 a	6.53 a	0.84 a*	2.12 a	4.34 a	6.18 a	10.28 a	13.34 a	1.29 a*	3.21 a	6.49 a	9.04 a	14.78 a	19.2 a
	16		1.04 a	2.46 a	3.68 a	6.28 a	0.3 a*	1.69 a	3.96 a	5.81 a	9.93 a	12.99 a	0.7 a*	2.75 a	6.05 a	8.6 a	14.36 a	18.76 a
	24		0.32 a	1.89 a	3.12 a	5.77 a		0.81 a	3.19 a	5.06 a	9.25 a	12.3 a		1.85 a	5.16 a	7.72 a	13.52 a	17.88 a
14	12		1.01 a	2.44 a	3.65 a	6.25 a	0.25 a*	1.65 a	3.93 a	5.78 a	9.91 a	12.97 a	0.64 a*	2.67 a	5.87 a	8.41 a	14.24 a	18.72 a
	16		0.52 b	2.05 a	3.27 a	5.91 a		1.05 a	3.41 a	5.27 a	9.44 a	12.5 a		2.07 a	5.28 a	7.82 a	13.67 a	18.13 a
	24			1.26 c	2.52 a	5.23 a			2.36 b	4.26 a	8.5 a	11.56 a		0.86 b	4.1 a	6.65 a	12.54 a	16.93 a
16	12		0.56 b	2.08 a	3.31 a	5.94 a		1.1 b	3.45 a	5.31 a	9.47 a	12.53 a		2.07 a	5.14 a	7.6 a	13.25 a	17.65 a
	16			1.57 c	2.81 a	5.5 a		0.32 c	2.77 b	4.65 a	8.86 a	11.92 a		1.3 b	4.4 a	6.86 a	12.54 a	16.89 a
	24			0.55 d	1.83 c	4.61 b			1.4 d	3.32 c	7.64 a	10.69 a			2.91 c	5.38 b	11.1 a	15.38 a

See Combined Axial and Lateral Load Table Notes

35 psf Lateral Load

Wall Height (ft)	Spacing (in.) o.c.	800S250-(mils)					800S300-(mils)				800S350-(mils)			
		33 ksi	50 ksi				50 ksi				50 ksi			
		43	54	68	97	118	54	68	97	118	54	68	97	118
8	12	4.33 a	7.6 a	11.18 a	18.93 a	24.79 a	7.93 a	11.46 a	20.69 a	27.14 a	10.35 a	15.14 a	25.2 a	33.63 a
	16	4.11 a	7.39 a	10.96 a	18.7 a	24.53 a	7.71 a	11.24 a	20.45 a	26.89 a	10.13 a	14.91 a	24.94 a	33.36 a
	24	3.68 a	6.98 a	10.53 a	18.22 a	24.03 a	7.28 a	10.82 a	19.96 a	26.38 a	9.68 a	14.46 a	24.43 a	32.82 a
9	12	4.15 a	7.4 a	10.97 a	18.67 a	24.45 a	7.71 a	11.23 a	20.36 a	26.76 a	10.1 a	14.87 a	24.86 a	33.19 a
	16	3.87 a	7.14 a	10.7 a	18.37 a	24.13 a	7.44 a	10.96 a	20.05 a	26.44 a	9.82 a	14.58 a	24.54 a	32.85 a
	24	3.32 a	6.62 a	10.15 a	17.76 a	23.49 a	6.9 a	10.42 a	19.44 a	25.8 a	9.25 a	14 a	23.89 a	32.18 a
10	12	3.94 a	7.18 a	10.73 a	18.37 a	24.05 a	7.47 a	10.96 a	19.97 a	26.32 a	9.82 a	14.55 a	24.44 a	32.68 a
	16	3.6 a	6.86 a	10.39 a	18 a	23.66 a	7.14 a	10.64 a	19.59 a	25.92 a	9.47 a	14.2 a	24.04 a	32.27 a
	24	2.92 a	6.22 a	9.72 a	17.25 a	22.88 a	6.47 a	9.98 a	18.84 a	25.14 a	8.78 a	13.49 a	23.25 a	31.44 a
12	12	3.46 a	6.66 a	10.16 a	17.64 a	23.06 a	6.91 a	10.34 a	19.02 a	25.22 a	9.16 a	13.8 a	23.35 a	31.49 a
	16	2.97 a	6.2 a	9.68 a	17.11 a	22.51 a	6.44 a	9.87 a	18.49 a	24.67 a	8.67 a	13.3 a	22.79 a	30.91 a
	24	2 a	5.3 a	8.73 a	16.05 a	21.41 a	5.5 a	8.94 a	17.44 a	23.57 a	7.69 a	12.31 a	21.67 a	29.75 a
14	12	2.89 a	6.03 a	9.39 a	16.55 a	21.78 a	6.25 a	9.58 a	17.85 a	23.86 a	8.38 a	12.9 a	22.06 a	29.8 a
	16	2.24 a	5.42 a	8.76 a	15.86 a	21.05 a	5.62 a	8.97 a	17.15 a	23.14 a	7.73 a	12.24 a	21.32 a	29.03 a
	24	0.94 b	4.22 a	7.5 a	14.46 a	19.61 a	4.37 a	7.73 a	15.77 a	21.68 a	6.44 a	10.92 a	19.85 a	27.5 a
16	12	2.25 a	5.3 a	8.49 a	15.24 a	20.22 a	5.49 a	8.72 a	16.49 a	22.29 a	7.52 a	11.88 a	20.62 a	27.69 a
	16	1.42 b	4.54 a	7.7 a	14.37 a	19.32 a	4.7 a	7.94 a	15.63 a	21.38 a	6.7 a	11.05 a	19.7 a	26.74 a
	24	-0.24 d	3.02 c	6.11 a	12.63 a	17.5 a	3.11 b	6.38 a	13.89 a	19.55 a	5.07 a	9.38 a	17.84 a	24.84 a

See Combined Axial and Lateral Load Table Notes

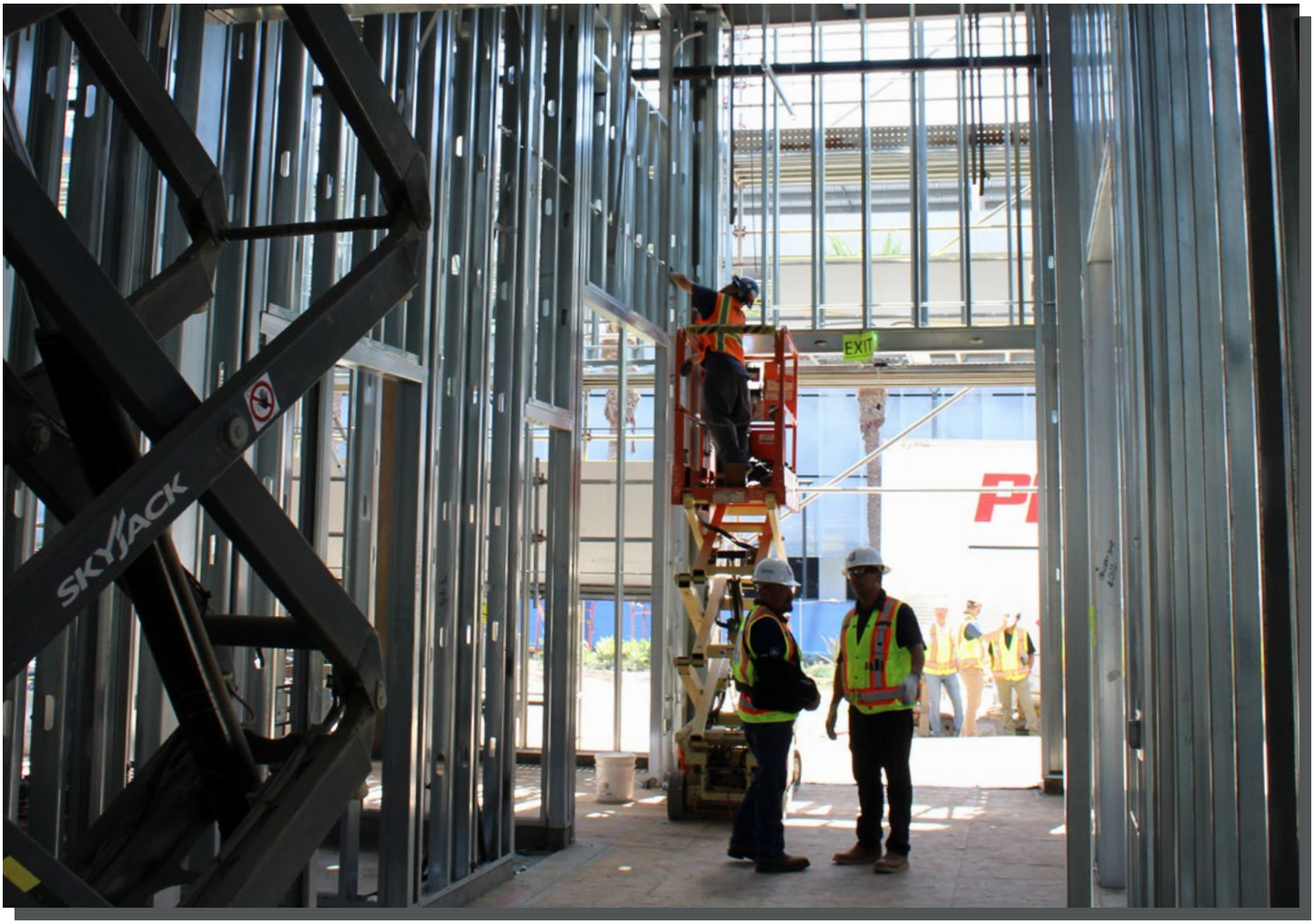

40 psf Lateral Load

Wall Height (ft)	Spacing (in.) o.c.	362S137-(mils)				362S162-(mils)					362S200-(mils)					362S250-(mils)			
		33 ksi		50 ksi		33 ksi		50 ksi			33 ksi		50 ksi			33 ksi	50 ksi		
		33	43	54	68	33	43	54	68	97	97	33	54	68	97	43	54	68	97
8	12	0.31 c	0.92 b	2.18 a	3.24 a	0.6 b	1.31 a	2.96 a	4.19 a	6.55 a	0.87 b	1.92 a	3.88 a	6.62 a	8.22 a	2.26 a	4.47 a	6.29 a	9.43 a
	16		0.47 c	1.83 b	2.93 a	0.12 d	0.86 c	2.57 b	3.84 a	6.2 a	0.35 c	1.4 b	3.44 a	6.1 a	7.85 a	1.71 a	3.99 a	5.81 a	9 a
	24			1.12 d	2.31 c		-0.06 d	1.8 d	3.14 c	5.49 a		0.38 d	2.55 c	5.07 b	7.1 a	0.6 c	3.03 b	4.87 a	8.13 a
9	12		0.55 d	1.81 c	2.84 b	0.21 d	0.91 c	2.51 b	3.69 a	5.87 a	0.44 c	1.45 b	3.32 a	5.85 a	7.39 a	1.77 a	3.91 a	5.53 a	8.49 a
	16			1.38 d	2.47 c		0.35 d	2.05 c	3.27 b	5.45 a		0.82 c	2.8 c	5.23 a	6.95 a	1.09 c	3.33 b	4.98 a	7.98 a
	24			0.53 e	1.73 e			1.12 e	2.43 d	4.61 c			1.74 d	4 c	6.07 b		2.16 d	3.86 c	6.95 a
10	12		0.16 e	1.42 d	2.42 c		0.47 d	2.05 c	3.16 b	5.15 a		0.96 d	2.75 c	5.02 b	6.52 a	1.25 c	3.31 b	4.76 a	7.51 a
	16			0.93 e	1.99 d			1.51 d	2.68 d	4.68 b		0.23 e	2.14 d	4.31 c	6.02 a	0.43 d	2.63 c	4.12 b	6.93 a
	24				1.13 e			0.43 e	1.72 e	3.72 d			0.92 e	2.9 e	5.02 c		1.27 e	2.85 d	5.76 c
12	12			0.66 e	1.58 e			1.12 e	2.11 e	3.72 d			1.62 e	3.37 d	4.79 c	0.16 e	2.02 d	3.25 c	5.56 b
	16			0.04 f	1.05 f			0.47 f	1.53 e	3.15 e			0.89 e	2.53 e	4.2 d		1.2 e	2.49 d	4.87 c
	24								0.38 f	2.02 f				0.85 f	3.02 e			0.97 e	3.48 e
14	12				0.84 f			0.35 f	1.22 f	2.53 e			0.68 f	2 e	3.37 e		0.93 e	1.99 e	3.93 d
	16				0.24 f				0.58 f	1.9 f				1.07 f	2.72 e		0.01 f	1.14 f	3.16 e
	24									0.65 f					1.42 f				1.61 f
16	12				0.24 f					1.59 f				0.94 f	2.27 f		0.07 f	1 f	2.65 e
	16									0.92 f					1.57 f			0.08 f	1.82 f
	24														0.18				0.16 f

40 psf Lateral Load

Wall Height (ft)	Spacing (in.) o.c.	362S300-(mils)			600S137-(mils)					600S162-(mils)						600S200-(mils)	
		50 ksi			33 ksi		50 ksi			33 ksi		50 ksi				33 ksi	
		54	68	97	33	43	54	68	97	33	43	54	68	97	118	33	43
8	12	4.55 a	6.74 a	10.66 a	1.05 a	1.81 a	3.23 a	4.47 a	7.02 a	1.68 a	2.68 a	4.9 a	6.76 a	10.67 a	13.49 a	2.03 a	3.42 a
	16	4.08 a	6.26 a	10.22 a	0.78 a	1.54 a	3.01 a	4.25 a	6.82 a	1.4 a	2.4 a	4.64 a	6.51 a	10.41 a	13.23 a	1.72 a	3.1 a
	24	3.13 b	5.3 a	9.34 a	0.22 a	1.01 a	2.58 a	3.83 a	6.44 a	0.82 a	1.85 a	4.11 a	6.01 a	9.89 a	12.69 a	1.08 a	2.44 a
9	12	3.99 a	6 a	9.77 a	0.83 a	1.6 a	3.05 a	4.3 a	6.86 a	1.45 a	2.46 a	4.69 a	6.56 a	10.46 a	13.28 a	1.77 a	3.14 a
	16	3.42 a	5.42 a	9.24 a	0.48 a	1.26 a	2.78 a	4.03 a	6.62 a	1.08 a	2.11 a	4.35 a	6.25 a	10.13 a	12.94 a	1.37 a	2.72 a
	24	2.28 c	4.27 b	8.18 a		0.59 a	2.23 a	3.49 a	6.13 a	0.36 b	1.41 a	3.69 a	5.61 a	9.47 a	12.27 a	0.57 a	1.9 a
10	12	3.41 a	5.24 a	8.7 a	0.59 a	1.36 a	2.86 a	4.11 a	6.69 a	1.18 a	2.2 a	4.44 a	6.34 a	10.23 a	13.04 a	1.48 a	2.81 a
	16	2.74 c	4.57 b	8.09 a	0.16 b	0.95 a	2.52 a	3.77 a	6.39 a	0.74 a	1.77 a	4.03 a	5.95 a	9.82 a	12.63 a	0.99 a	2.31 a
	24	1.4 d	3.24 d	6.88 b		0.12 c	1.85 b	3.11 a	5.79 a		0.92 b	3.21 a	5.17 a	9.01 a	11.79 a	0.01 c	1.3 a
12	12	2.27 d	3.76 c	6.55 a	0.02 c	0.81 b	2.41 a	3.67 a	6.29 a	0.58 c	1.6 a	3.78 a	5.71 a	9.69 a	12.49 a	0.81 b	2.09 a
	16	1.4 e	2.93 d	5.83 c		0.22 c	1.93 b	3.19 a	5.86 a		1 c	3.2 b	5.16 a	9.11 a	11.89 a	0.13 c	1.38 b
	24		1.28 e	4.39 d			0.95 d	2.23 c	4.99 b			2.06 d	4.05 c	7.94 a	10.69 a		
14	12	1.14 e	2.39 e	4.73 d		0.17 d	1.89 c	3.15 b	5.82 a		0.92 d	3.01 c	4.87 a	8.77 a	11.84 a	0.07 d	1.27 c
	16	0.13 f	1.45 e	3.92 e			1.22 d	2.49 d	5.23 b		0.12 e	2.26 d	4.15 c	8 a	11.03 a		0.35 d
	24			2.31 f				1.19 e	4.06 d			0.77 e	2.72 d	6.46 c	9.39 c		
16	12	0.18 f	1.26 f	3.29 e			1.28 e	2.55 d	5.28 c		0.18 e	2.17 d	3.92 c	7.49 b	10.26 a		0.4 d
	16		0.25 f	2.43 f			0.41 e	1.69 e	4.51 d			1.26 e	3.05 d	6.56 c	9.27 c		
	24			0.69 f					2.97 e				1.3 e	4.69 e	7.3 d		

See Combined Axial and Lateral Load Table Notes

40 psf Lateral Load

Wall Height (ft)	Spacing (in.) o.c.	600S200-(mils)				600S250-(mils)					600S300-(mils)				600S350-(mils)			
		50 ksi				33 ksi	50 ksi				50 ksi				50 ksi			
		54	68	97	118	43	54	68	97	118	54	68	97	118	54	68	97	118
8	12	6.52 a	8.94 a	14.43 a	18.69 a	3.76 a	6.77 a	10.02 a	16.93 a	21.79 a	7.07 a	10.22 a	18.25 a	23.89 a	9.33 a	13.77 a	22.81 a	30.34 a
	16	6.2 a	8.62 a	14.13 a	18.37 a	3.42 a	6.46 a	9.68 a	16.55 a	21.4 a	6.76 a	9.89 a	17.88 a	23.51 a	8.99 a	13.41 a	22.41 a	29.93 a
	24	5.57 a	7.99 a	13.51 a	17.73 a	2.73 a	5.83 a	8.99 a	15.81 a	20.63 a	6.13 a	9.21 a	17.14 a	22.74 a	8.32 a	12.69 a	21.62 a	29.11 a
9	12	6.19 a	8.58 a	14.01 a	18.2 a	3.46 a	6.45 a	9.61 a	16.36 a	21.13 a	6.74 a	9.82 a	17.66 a	23.21 a	8.93 a	13.29 a	22.14 a	29.37 a
	16	5.79 a	8.18 a	13.62 a	17.79 a	3.03 a	6.06 a	9.18 a	15.9 a	20.65 a	6.34 a	9.4 a	17.2 a	22.73 a	8.51 a	12.84 a	21.65 a	28.87 a
	24	5 a	7.38 a	12.86 a	16.99 a	2.18 a	5.27 a	8.33 a	14.97 a	19.69 a	5.55 a	8.56 a	16.27 a	21.78 a	7.67 a	11.93 a	20.66 a	27.85 a
10	12	5.81 a	8.16 a	13.51 a	17.61 a	3.13 a	6.08 a	9.16 a	15.72 a	20.38 a	6.37 a	9.38 a	16.99 a	22.45 a	8.48 a	12.75 a	21.4 a	28.29 a
	16	5.33 a	7.68 a	13.05 a	17.12 a	2.61 a	5.61 a	8.64 a	15.16 a	19.8 a	5.89 a	8.87 a	16.43 a	21.87 a	7.98 a	12.2 a	20.8 a	27.68 a
	24	4.37 a	6.72 a	12.12 a	16.15 a	1.56 a	4.66 a	7.59 a	14.03 a	18.64 a	4.93 a	7.84 a	15.31 a	20.71 a	6.96 a	11.11 a	19.6 a	26.46 a
12	12	4.95 a	7.2 a	12.33 a	16.19 a	2.38 a	5.25 a	8.12 a	14.22 a	18.59 a	5.52 a	8.41 a	15.45 a	20.7 a	7.49 a	11.53 a	19.75 a	25.84 a
	16	4.29 a	6.53 a	11.69 a	15.52 a	1.64 a	4.59 a	7.4 a	13.45 a	17.8 a	4.85 a	7.69 a	14.69 a	19.9 a	6.78 a	10.78 a	18.92 a	25.01 a
	24	2.96 c	5.2 b	10.41 a	14.17 a	0.17 c	3.27 b	5.96 a	11.91 a	16.22 a	3.52 b	6.27 a	13.16 a	18.31 a	5.38 a	9.26 a	17.27 a	23.36 a
14	12	3.97 b	6.08 a	10.9 a	14.45 a	1.53 b	4.34 a	6.95 a	12.48 a	16.51 a	4.57 a	7.31 a	13.72 a	18.78 a	6.37 a	10.16 a	17.74 a	23.1 a
	16	3.12 c	5.23 b	10.09 a	13.6 a	0.56 d	3.48 c	6.02 a	11.5 a	15.51 a	3.71 b	6.38 a	12.75 a	17.76 a	5.47 a	9.19 a	16.68 a	22.05 a
	24	1.43 e	3.53 d	8.46 c	11.89 b		1.76 d	4.16 c	9.55 b	13.51 a	1.98 d	4.53 c	10.8 a	15.7 a	3.66 c	7.23 b	14.56 a	19.97 a
16	12	2.94 d	4.87 c	9.32 a	12.51 a	0.62 d	3.39 c	5.72 b	10.62 a	14.26 a	3.56 c	6.12 b	11.91 a	16.36 a	5.2 b	8.7 a	15.32 a	20.21 a
	16	1.92 e	3.85 d	8.35 c	11.49 b		2.32 d	4.58 c	9.45 b	13.06 a	2.49 d	4.98 c	10.73 a	15.13 a	4.09 c	7.5 b	14.06 a	18.96 a
	24		1.82 e	6.39 d	9.45 d		0.18 e	2.31 e	7.12 d	10.67 c	0.37 e	2.68 e	8.37 c	12.67 b	1.88 e	5.1 d	11.53 c	16.48 b

40 psf Lateral Load

Wall Height (ft)	Spacing (in.) o.c.	800S137-(mils)					800S162-(mils)						800S200-(mils)					
		33 ksi		50 ksi			33 ksi		50 ksi				33 ksi		50 ksi			
		33	43	54	68	97	33	43	54	68	97	118	33	43	54	68	97	118
8	12	1.1 a*	1.94 a	3.17 a	4.36 a	6.9 a	1.65 a*	2.77 a	4.91 a	6.73 a	10.79 a	13.85 a	2.16 a*	3.88 a	7.15 a	9.69 a	15.4 a	19.85 a
	16	0.87 a*	1.76 a	3.03 a	4.22 a	6.77 a	1.37 a*	2.55 a	4.72 a	6.54 a	10.61 a	13.67 a	1.86 a*	3.65 a	6.93 a	9.46 a	15.18 a	19.63 a
	24	0.42 a*	1.39 a	2.74 a	3.94 a	6.51 a	0.82 a*	2.1 a	4.33 a	6.17 a	10.26 a	13.32 a	1.26 a*	3.19 a	6.48 a	9.02 a	14.76 a	19.18 a
9	12	0.92 a*	1.8 a	3.06 a	4.25 a	6.79 a	1.43 a*	2.59 a	4.76 a	6.58 a	10.65 a	13.71 a	1.93 a*	3.7 a	6.97 a	9.51 a	15.23 a	19.67 a
	16	0.63 a*	1.56 a	2.87 a	4.07 a	6.63 a	1.08 a*	2.31 a	4.51 a	6.34 a	10.43 a	13.49 a	1.55 a*	3.41 a	6.69 a	9.23 a	14.96 a	19.39 a
	24	0.05 a*	1.09 a	2.5 a	3.72 a	6.31 a	0.38 a*	1.75 a	4.02 a	5.86 a	9.98 a	13.04 a	0.78 a*	2.83 a	6.12 a	8.66 a	14.42 a	18.82 a
10	12	0.72 a*	1.63 a	2.93 a	4.12 a	6.68 a	1.18 a*	2.39 a	4.58 a	6.41 a	10.49 a	13.55 a	1.66 a*	3.49 a	6.77 a	9.31 a	15.04 a	19.47 a
	16	0.36 a*	1.34 a	2.7 a	3.9 a	6.48 a	0.75 a*	2.05 a	4.28 a	6.12 a	10.22 a	13.28 a	1.19 a*	3.14 a	6.42 a	8.96 a	14.7 a	19.12 a
	24		0.77 a	2.24 a	3.46 a	6.08 a		1.35 a	3.67 a	5.53 a	9.67 a	12.73 a	0.25 a*	2.42 a	5.71 a	8.27 a	14.04 a	18.43 a
12	12	0.24 a*	1.25 a	2.63 a	3.83 a	6.42 a	0.61 a*	1.94 a	4.18 a	6.02 a	10.13 a	13.19 a	1.03 a*	3.01 a	6.3 a	8.85 a	14.6 a	19.01 a
	16		0.84 a	2.3 a	3.52 a	6.13 a		1.44 a	3.74 a	5.6 a	9.74 a	12.8 a	0.36 a*	2.5 a	5.79 a	8.35 a	14.12 a	18.51 a
	24		0.01 b	1.64 a	2.88 a	5.56 a		0.43 a	2.86 a	4.74 a	8.95 a	12.01 a		1.46 a	4.78 a	7.35 a	13.16 a	17.51 a
14	12		0.8 a	2.27 a	3.49 a	6.11 a		1.39 a	3.7 a	5.56 a	9.7 a	12.76 a	0.3 a*	2.42 a	5.62 a	8.15 a	14 a	18.47 a
	16		0.24 b	1.82 a	3.06 a	5.72 a		0.71 b	3.11 a	4.98 a	9.17 a	12.23 a		1.72 a	4.94 a	7.49 a	13.35 a	17.78 a
	24			0.93 c	2.2 b	4.94 a			1.91 c	3.82 a	8.1 a	11.15 a		0.34 c	3.59 b	6.15 a	12.05 a	16.42 a
16	12		0.28 c	1.86 b	3.09 a	5.75 a		0.77 b	3.16 a	5.03 a	9.21 a	12.27 a		1.74 a	4.82 a	7.28 a	12.94 a	17.33 a
	16			1.28 c	2.53 b	5.24 a			2.38 c	4.27 a	8.51 a	11.57 a		0.86 c	3.97 b	6.44 a	12.13 a	16.46 a
	24			0.11 e	1.4 d	4.22 c			0.82 d	2.75 c	7.11 b	10.17 a			2.27 d	4.75 c	10.49 a	14.73 a

See Combined Axial and Lateral Load Table Notes

40 psf Lateral Load

Wall Height (ft)	Spacing (in.) o.c.	800S250-(mils)					800S300-(mils)				800S350-(mils)			
		33 ksi	50 ksi				50 ksi				50 ksi			
		43	54	68	97	118	54	68	97	118	54	68	97	118
8	12	4.24 a	7.51 a	11.09 a	18.83 a	24.68 a	7.83 a	11.37 a	20.59 a	27.03 a	10.26 a	15.05 a	25.09 a	33.51 a
	16	3.99 a	7.27 a	10.84 a	18.56 a	24.39 a	7.59 a	11.12 a	20.31 a	26.74 a	10 a	14.78 a	24.8 a	33.21 a
	24	3.49 a	6.8 a	10.34 a	18.01 a	23.81 a	7.09 a	10.63 a	19.75 a	26.16 a	9.48 a	14.26 a	24.21 a	32.59 a
9	12	4.03 a	7.29 a	10.85 a	18.54 a	24.31 a	7.6 a	11.11 a	20.23 a	26.62 a	9.98 a	14.74 a	24.73 a	33.04 a
	16	3.71 a	6.99 a	10.54 a	18.2 a	23.95 a	7.29 a	10.8 a	19.88 a	26.26 a	9.66 a	14.41 a	24.36 a	32.66 a
	24	3.08 a	6.4 a	9.92 a	17.5 a	23.22 a	6.67 a	10.19 a	19.18 a	25.53 a	9.01 a	13.75 a	23.62 a	31.89 a
10	12	3.79 a	7.04 a	10.59 a	18.21 a	23.88 a	7.33 a	10.82 a	19.81 a	26.15 a	9.67 a	14.4 a	24.27 a	32.5 a
	16	3.4 a	6.68 a	10.2 a	17.78 a	23.44 a	6.95 a	10.45 a	19.38 a	25.7 a	9.27 a	13.99 a	23.82 a	32.03 a
	24	2.63 a	5.95 a	9.44 a	16.94 a	22.55 a	6.19 a	9.7 a	18.52 a	24.81 a	8.48 a	13.19 a	22.91 a	31.09 a
12	12	3.25 a	6.46 a	9.96 a	17.41 a	22.82 a	6.71 a	10.14 a	18.79 a	24.99 a	8.95 a	13.59 a	23.11 a	31.24 a
	16	2.7 a	5.95 a	9.41 a	16.81 a	22.2 a	6.17 a	9.61 a	18.19 a	24.36 a	8.39 a	13.02 a	22.47 a	30.58 a
	24	1.59 a	4.91 a	8.32 a	15.6 a	20.94 a	5.09 a	8.54 a	16.99 a	23.1 a	7.27 a	11.88 a	21.2 a	29.25 a
14	12	2.61 a	5.77 a	9.12 a	16.25 a	21.47 a	5.98 a	9.32 a	17.55 a	23.55 a	8.1 a	12.62 a	21.74 a	29.47 a
	16	1.87 a	5.08 a	8.4 a	15.46 a	20.64 a	5.26 a	8.61 a	16.76 a	22.72 a	7.37 a	11.87 a	20.9 a	28.6 a
	24	0.39 b	3.7 a	6.96 a	13.87 a	18.98 a	3.83 a	7.2 a	15.17 a	21.06 a	5.89 a	10.35 a	19.22 a	26.85 a
16	12	1.89 a	4.98 a	8.15 a	14.87 a	19.84 a	5.15 a	8.38 a	16.12 a	21.9 a	7.17 a	11.52 a	20.23 a	27.28 a
	16	0.94 b	4.11 a	7.24 a	13.87 a	18.8 a	4.25 a	7.49 a	15.13 a	20.86 a	6.24 a	10.57 a	19.17 a	26.19 a
	24		2.36 c	5.43 b	11.88 a	16.73 a	2.44 c	5.71 b	13.15 a	18.77 a	4.37 b	8.66 a	17.05 a	24.02 a

See Combined Axial and Lateral Load Table Notes

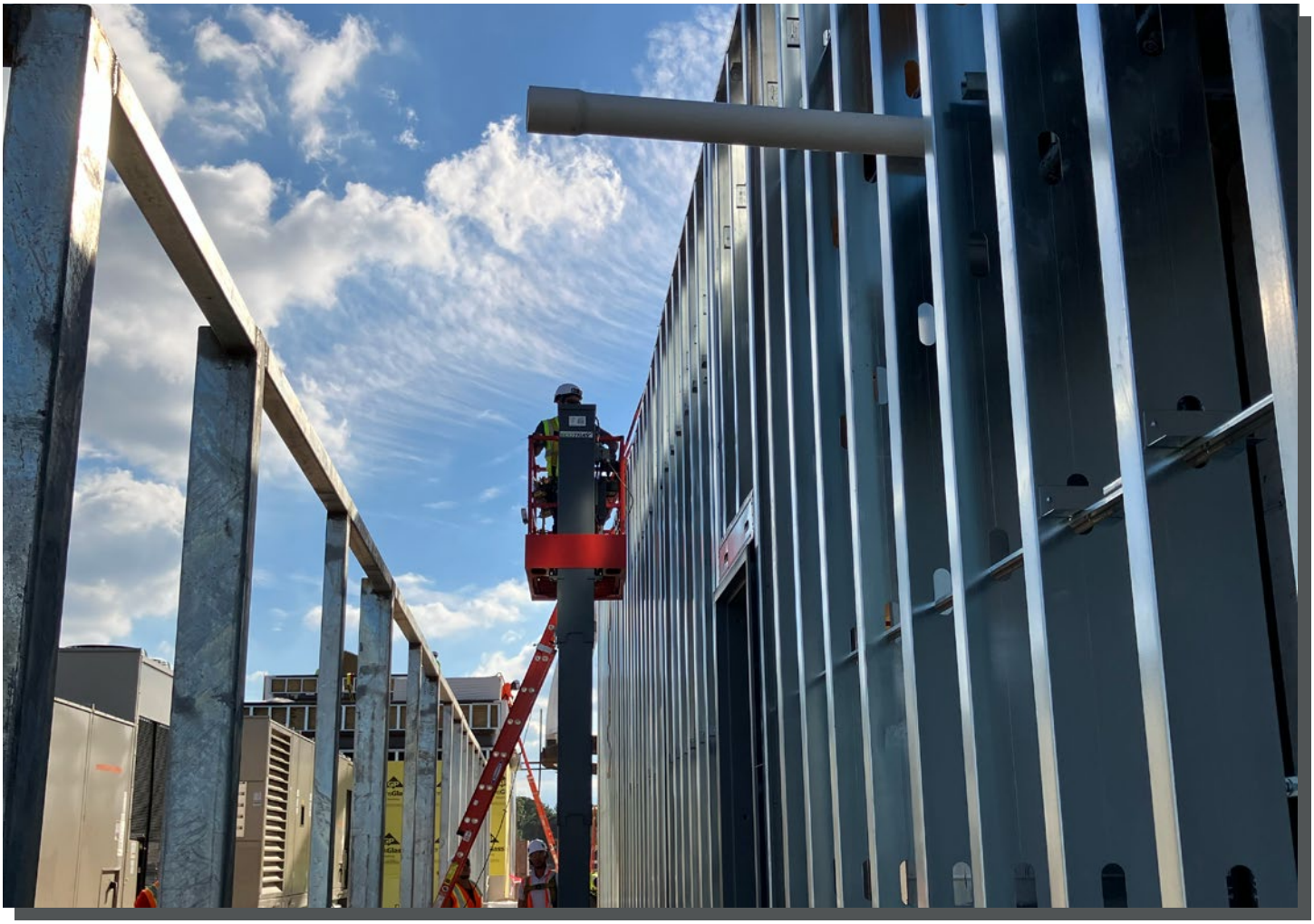

50 psf Lateral Load

Wall Height (ft)	Spacing (in.) o.c.	362S137-(mils)				362S162-(mils)					362S200-(mils)					362S250-(mils)			
		33 ksi		50 ksi		33 ksi		50 ksi			33 ksi	50 ksi				33 ksi	50 ksi		
		33	43	54	68	33	43	54	68	97	97	33	54	68	97	43	54	68	97
8	12		0.58 c	1.92 b	3 a	0.24 c	0.97 b	2.67 a	3.93 a	6.28 a	0.48 c	1.53 a	3.55 a	6.23 a	7.94 a	1.85 a	4.11 a	5.93 a	9.11 a
	16		0.03 d	1.47 c	2.62 b		0.4 d	2.18 c	3.49 b	5.84 a		0.89 c	3 b	5.59 a	7.48 a	1.15 b	3.51 a	5.34 a	8.56 a
	24			0.59 e	1.84 d			1.21 d	2.62 d	4.96 b			1.89 d	4.29 c	6.54 a		2.31 c	4.17 b	7.48 a
9	12		0.14 d	1.49 d	2.56 c		0.49 d	2.16 c	3.37 b	5.56 a		0.98 c	2.93 b	5.39 a	7.06 a	1.26 b	3.47 a	5.11 a	8.1 a
	16			0.96 e	2.1 d			1.58 d	2.85 c	5.03 b		0.2 d	2.27 d	4.61 c	6.51 a	0.41 d	2.74 c	4.42 b	7.46 a
	24				1.17 e			0.42 e	1.81 e	3.99 d			0.94 e	3.07 d	5.41 c		1.29 d	3.02 d	6.18 b
10	12			1.05 e	2.1 d			1.65 d	2.8 c	4.8 b		0.41 d	2.29 d	4.49 c	6.14 a	0.64 d	2.8 c	4.28 b	7.07 a
	16			0.43 e	1.56 e			0.97 e	2.2 d	4.2 c			1.53 e	3.6 d	5.52 c		1.95 d	3.49 c	6.34 b
	24				0.48 f				1 e	3 e			0.01 f	1.83 e	4.27 d		0.25 e	1.89 e	4.88 d
12	12			0.2 f	1.19 e			0.63 f	1.68 e	3.29 d			1.07 e	2.74 e	4.35 d		1.4 e	2.68 d	5.04 c
	16				0.52 f				0.95 f	2.59 e			0.16 f	1.69 e	3.61 e		0.38 f	1.73 e	4.18 d
	24									1.17 f					2.14 f				2.44 e
14	12				0.39 f				0.74 f	2.06 f			0.07 f	1.3 f	2.88 e		0.24 f	1.35 e	3.35 e
	16									1.27 f				0.14 f	2.07 f			0.29 f	2.38 e
	24														0.44 f				0.46 f
16	12									1.09 f				0.19 f	1.74 f			0.31 f	2.02 f
	16									0.26					0.88 f				0.99 f
	24																		

50 psf Lateral Load

Wall Height (ft)	Spacing (in.) o.c.	362S300-(mils)			600S137-(mils)					600S162-(mils)						600S200-(mils)	
		50 ksi			33 ksi		50 ksi			33 ksi		50 ksi				33 ksi	
		54	68	97	33	43	54	68	97	33	43	54	68	97	118	33	43
8	12	4.55 a	6.74 a	10.66 a	1.05 a	1.81 a	3.23 a	4.47 a	7.02 a	1.68 a	2.68 a	4.9 a	6.76 a	10.67 a	13.49 a	2.03 a	3.42 a
	16	4.08 a	6.26 a	10.22 a	0.78 a	1.54 a	3.01 a	4.25 a	6.82 a	1.4 a	2.4 a	4.64 a	6.51 a	10.41 a	13.23 a	1.72 a	3.1 a
	24	3.13 b	5.3 a	9.34 a	0.22 a	1.01 a	2.58 a	3.83 a	6.44 a	0.82 a	1.85 a	4.11 a	6.01 a	9.89 a	12.69 a	1.08 a	2.44 a
9	12	3.99 a	6 a	9.77 a	0.83 a	1.6 a	3.05 a	4.3 a	6.86 a	1.45 a	2.46 a	4.69 a	6.56 a	10.46 a	13.28 a	1.77 a	3.14 a
	16	3.42 a	5.42 a	9.24 a	0.48 a	1.26 a	2.78 a	4.03 a	6.62 a	1.08 a	2.11 a	4.35 a	6.25 a	10.13 a	12.94 a	1.37 a	2.72 a
	24	2.28 c	4.27 b	8.18 a		0.59 a	2.23 a	3.49 a	6.13 a	0.36 b	1.41 a	3.69 a	5.61 a	9.47 a	12.27 a	0.57 a	1.9 a
10	12	3.41 a	5.24 a	8.7 a	0.59 a	1.36 a	2.86 a	4.11 a	6.69 a	1.18 a	2.2 a	4.44 a	6.34 a	10.23 a	13.04 a	1.48 a	2.81 a
	16	2.74 c	4.57 b	8.09 a	0.16 b	0.95 a	2.52 a	3.77 a	6.39 a	0.74 a	1.77 a	4.03 a	5.95 a	9.82 a	12.63 a	0.99 a	2.31 a
	24	1.4 d	3.24 d	6.88 b		0.12 c	1.85 b	3.11 a	5.79 a		0.92 b	3.21 a	5.17 a	9.01 a	11.79 a	0.01 c	1.3 a
12	12	2.27 d	3.76 c	6.55 a	0.02 c	0.81 b	2.41 a	3.67 a	6.29 a	0.58 c	1.6 a	3.78 a	5.71 a	9.69 a	12.49 a	0.81 b	2.09 a
	16	1.4 e	2.93 d	5.83 c		0.22 c	1.93 b	3.19 a	5.86 a		1 c	3.2 b	5.16 a	9.11 a	11.89 a	0.13 c	1.38 b
	24		1.28 e	4.39 d			0.95 d	2.23 c	4.99 b			2.06 d	4.05 c	7.94 a	10.69 a		
14	12	1.14 e	2.39 e	4.73 d		0.17 d	1.89 c	3.15 b	5.82 a		0.92 d	3.01 c	4.87 a	8.77 a	11.84 a	0.07 d	1.27 c
	16	0.13 f	1.45 e	3.92 e			1.22 d	2.49 d	5.23 b		0.12 e	2.26 d	4.15 c	8 a	11.03 a		0.35 d
	24			2.31 f				1.19 e	4.06 d			0.77 e	2.72 d	6.46 c	9.39 c		
16	12	0.18 f	1.26 f	3.29 e			1.28 e	2.55 d	5.28 c		0.18 e	2.17 d	3.92 c	7.49 b	10.26 a		0.4 d
	16		0.25 f	2.43 f			0.41 e	1.69 e	4.51 d			1.26 e	3.05 d	6.56 c	9.27 c		
	24			0.69 f					2.97 e				1.3 e	4.69 e	7.3 d		

See Combined Axial and Lateral Load Table Notes

50 psf Lateral Load

Wall Height (ft)	Spacing (in.) o.c.	600S200-(mils)				600S250-(mils)					600S300-(mils)				600S350-(mils)			
		50 ksi				33 ksi	50 ksi				50 ksi				50 ksi			
		54	68	97	118	43	54	68	97	118	54	68	97	118	54	68	97	118
8	12	6.28 a	8.7 a	14.2 a	18.45 a	3.5 a	6.54 a	9.76 a	16.65 a	21.5 a	6.84 a	9.97 a	17.97 a	23.6 a	9.08 a	13.5 a	22.51 a	30.03 a
	16	5.88 a	8.3 a	13.82 a	18.05 a	3.08 a	6.15 a	9.33 a	16.18 a	21.02 a	6.44 a	9.55 a	17.51 a	23.12 a	8.66 a	13.05 a	22.02 a	29.52 a
	24	5.09 a	7.51 a	13.06 a	17.24 a	2.22 a	5.36 a	8.47 a	15.25 a	20.06 a	5.65 a	8.71 a	16.58 a	22.16 a	7.82 a	12.14 a	21.03 a	28.5 a
9	12	5.89 a	8.28 a	13.72 a	17.89 a	3.14 a	6.15 a	9.29 a	16.01 a	20.77 a	6.44 a	9.51 a	17.31 a	22.85 a	8.62 a	12.95 a	21.77 a	28.99 a
	16	5.39 a	7.78 a	13.24 a	17.39 a	2.6 a	5.66 a	8.76 a	15.43 a	20.17 a	5.95 a	8.98 a	16.73 a	22.25 a	8.09 a	12.39 a	21.15 a	28.36 a
	24	4.4 a	6.79 a	12.29 a	16.38 a	1.53 a	4.69 a	7.68 a	14.27 a	18.98 a	4.96 a	7.93 a	15.58 a	21.06 a	7.05 a	11.26 a	19.91 a	27.09 a
10	12	5.45 a	7.8 a	13.17 a	17.25 a	2.74 a	5.73 a	8.77 a	15.3 a	19.94 a	6.01 a	9 a	16.57 a	22.01 a	8.1 a	12.34 a	20.95 a	27.83 a
	16	4.85 a	7.2 a	12.59 a	16.64 a	2.08 a	5.13 a	8.12 a	14.6 a	19.22 a	5.41 a	8.36 a	15.87 a	21.29 a	7.47 a	11.66 a	20.2 a	27.07 a
	24	3.65 a	5.99 a	11.43 a	15.41 a	0.78 b	3.94 a	6.81 a	13.19 a	17.77 a	4.2 a	7.08 a	14.48 a	19.84 a	6.2 a	10.29 a	18.7 a	25.54 a
12	12	4.45 a	6.7 a	11.85 a	15.69 a	1.83 a	4.76 a	7.58 a	13.64 a	18 a	5.02 a	7.87 a	14.88 a	20.1 a	6.96 a	10.96 a	19.13 a	25.22 a
	16	3.62 b	5.87 a	11.05 a	14.85 a	0.91 b	3.93 a	6.68 a	12.68 a	17.01 a	4.19 a	6.98 a	13.93 a	19.11 a	6.08 a	10.02 a	18.09 a	24.18 a
	24	1.97 d	4.21 c	9.45 a	13.17 a		2.28 c	4.88 b	10.76 a	15.04 a	2.52 c	5.2 b	12.02 a	17.11 a	4.33 b	8.13 a	16.03 a	22.12 a
14	12	3.33 c	5.44 b	10.29 a	13.81 a	0.81 c	3.7 b	6.25 a	11.75 a	15.76 a	3.92 b	6.61 a	12.99 a	18.01 a	5.7 a	9.43 a	16.94 a	22.32 a
	16	2.28 d	4.38 c	9.27 b	12.74 a		2.62 d	5.09 c	10.53 a	14.51 a	2.84 c	5.45 b	11.78 a	16.73 a	4.57 c	8.21 a	15.62 a	21.01 a
	24	0.16 e	2.26 e	7.24 d	10.61 c		0.47 e	2.77 d	8.09 c	12.01 b	0.68 e	3.14 d	9.34 c	14.16 a	2.31 d	5.77 c	12.97 b	18.41 a
16	12	2.17 d	4.11 d	8.59 b	11.74 a		2.59 d	4.87 c	9.74 b	13.36 a	2.76 d	5.26 c	11.03 a	15.44 a	4.37 c	7.8 b	14.37 a	19.27 a
	16	0.9 e	2.84 e	7.37 d	10.47 c		1.25 e	3.44 d	8.28 c	11.87 b	1.43 e	3.83 d	9.55 b	13.9 a	2.99 d	6.3 c	12.79 b	17.72 a
	24		0.29 f	4.93 e	7.91 d			0.6 e	5.36 e	8.88 d		0.96 e	6.59 d	10.83 c	0.22 e	3.31 e	9.63 d	14.61 c

50 psf Lateral Load

Wall Height (ft)	Spacing (in.) o.c.	800S137-(mils)					800S162-(mils)						800S200-(mils)					
		33 ksi		50 ksi			33 ksi		50 ksi				33 ksi		50 ksi			
		33	43	54	68	97	33	43	54	68	97	118	33	43	54	68	97	118
8	12	0.93 a*	1.8 a	3.06 a	4.26 a	6.8 a	1.44 a*	2.6 a	4.76 a	6.59 a	10.66 a	13.72 a	1.94 a*	3.71 a	6.98 a	9.52 a	15.24 a	19.68 a
	16	0.64 a*	1.57 a	2.88 a	4.08 a	6.64 a	1.1 a*	2.33 a	4.52 a	6.35 a	10.44 a	13.5 a	1.56 a*	3.42 a	6.7 a	9.24 a	14.97 a	19.4 a
	24	0.07 a*	1.11 a	2.52 a	3.73 a	6.32 a	0.4 a*	1.77 a	4.03 a	5.88 a	10 a	13.06 a	0.81 a*	2.85 a	6.14 a	8.68 a	14.44 a	18.84 a
9	12	0.7 a*	1.62 a	2.92 a	4.12 a	6.67 a	1.17 a*	2.38 a	4.57 a	6.4 a	10.48 a	13.54 a	1.64 a*	3.48 a	6.76 a	9.3 a	15.02 a	19.46 a
	16	0.34 a*	1.33 a	2.69 a	3.89 a	6.47 a	0.73 a*	2.03 a	4.26 a	6.1 a	10.21 a	13.27 a	1.16 a*	3.12 a	6.4 a	8.95 a	14.69 a	19.11 a
	24		0.74 a	2.23 a	3.45 a	6.07 a		1.33 a	3.64 a	5.5 a	9.65 a	12.71 a	0.21 a*	2.39 a	5.69 a	8.24 a	14.01 a	18.4 a
10	12	0.45 a*	1.41 a	2.76 a	3.96 a	6.53 a	0.86 a*	2.13 a	4.35 a	6.19 a	10.29 a	13.35 a	1.31 a*	3.23 a	6.51 a	9.05 a	14.79 a	19.21 a
	16		1.05 a	2.47 a	3.68 a	6.28 a	0.32 a*	1.7 a	3.97 a	5.82 a	9.95 a	13.01 a	0.72 a*	2.78 a	6.07 a	8.62 a	14.37 a	18.77 a
	24		0.33 a	1.9 a	3.13 a	5.79 a		0.83 a	3.21 a	5.08 a	9.26 a	12.32 a		1.88 a	5.18 a	7.75 a	13.54 a	17.9 a
12	12		0.94 a	2.38 a	3.6 a	6.2 a	0.14 a*	1.56 a	3.85 a	5.7 a	9.84 a	12.9 a	0.53 a*	2.63 a	5.92 a	8.48 a	14.24 a	18.64 a
	16		0.42 a	1.97 a	3.2 a	5.85 a		0.93 a	3.3 a	5.17 a	9.34 a	12.4 a		1.98 a	5.29 a	7.85 a	13.64 a	18.01 a
	24			1.15 b	2.41 a	5.13 a			2.21 a	4.1 a	8.36 a	11.42 a		0.69 b	4.02 a	6.6 a	12.44 a	16.75 a
14	12		0.38 b	1.94 a	3.17 a	5.82 a		0.88 a	3.26 a	5.13 a	9.3 a	12.36 a		1.9 a	5.11 a	7.65 a	13.51 a	17.96 a
	16			1.38 b	2.63 a	5.33 a		0.03 c	2.51 b	4.4 a	8.63 a	11.69 a		1.03 b	4.27 a	6.82 a	12.7 a	17.1 a
	24			0.26 d	1.55 c	4.36 b			1.02 d	2.95 c	7.29 a	10.35 a			2.58 c	5.14 b	11.08 a	15.39 a
16	12			1.42 c	2.67 b	5.37 a		0.1 c	2.57 b	4.46 a	8.69 a	11.75 a		1.08 c	4.18 a	6.65 a	12.33 a	16.68 a
	16			0.69 d	1.97 c	4.73 b			1.6 d	3.51 c	7.81 a	10.87 a			3.12 c	5.59 b	11.31 a	15.59 a
	24				0.56 e	3.46 d				1.62 d	6.06 c	9.12 b			1 d	3.48 d	9.26 b	13.43 a

See Combined Axial and Lateral Load Table Notes

50 psf Lateral Load

Wall Height (ft)	Spacing (in.) o.c.	800S250-(mils)					800S300-(mils)				800S350-(mils)			
		33 ksi	50 ksi				50 ksi				50 ksi			
		43	54	68	97	118	54	68	97	118	54	68	97	118
8	12	4.05 a	7.33 a	10.9 a	18.63 a	24.46 a	7.65 a	11.18 a	20.38 a	26.82 a	10.06 a	14.85 a	24.87 a	33.28 a
	16	3.74 a	7.04 a	10.59 a	18.28 a	24.1 a	7.34 a	10.88 a	20.03 a	26.45 a	9.74 a	14.52 a	24.5 a	32.9 a
	24	3.11 a	6.45 a	9.97 a	17.6 a	23.38 a	6.72 a	10.27 a	19.34 a	25.73 a	9.1 a	13.87 a	23.77 a	32.13 a
9	12	3.79 a	7.07 a	10.62 a	18.28 a	24.04 a	7.36 a	10.88 a	19.96 a	26.35 a	9.74 a	14.49 a	24.45 a	32.75 a
	16	3.4 a	6.7 a	10.23 a	17.85 a	23.59 a	6.98 a	10.5 a	19.53 a	25.89 a	9.33 a	14.08 a	23.99 a	32.27 a
	24	2.61 a	5.95 a	9.45 a	16.99 a	22.68 a	6.2 a	9.73 a	18.65 a	24.98 a	8.52 a	13.26 a	23.06 a	31.31 a
10	12	3.5 a	6.77 a	10.3 a	17.89 a	23.55 a	7.05 a	10.54 a	19.49 a	25.81 a	9.37 a	14.1 a	23.93 a	32.15 a
	16	3.02 a	6.31 a	9.82 a	17.36 a	22.99 a	6.57 a	10.07 a	18.95 a	25.25 a	8.88 a	13.59 a	23.36 a	31.56 a
	24	2.05 a	5.4 a	8.86 a	16.3 a	21.88 a	5.62 a	9.13 a	17.88 a	24.13 a	7.88 a	12.58 a	22.23 a	30.38 a
12	12	2.83 a	6.07 a	9.55 a	16.96 a	22.35 a	6.31 a	9.74 a	18.34 a	24.51 a	8.53 a	13.16 a	22.63 a	30.74 a
	16	2.14 a	5.43 a	8.87 a	16.2 a	21.57 a	5.63 a	9.08 a	17.59 a	23.73 a	7.83 a	12.45 a	21.83 a	29.91 a
	24	0.76 a	4.13 a	7.5 a	14.7 a	20 a	4.28 a	7.75 a	16.09 a	22.15 a	6.43 a	11.02 a	20.24 a	28.25 a
14	12	2.05 a	5.25 a	8.58 a	15.66 a	20.85 a	5.44 a	8.79 a	16.96 a	22.93 a	7.55 a	12.05 a	21.11 a	28.81 a
	16	1.13 a	4.39 a	7.68 a	14.66 a	19.81 a	4.55 a	7.91 a	15.97 a	21.89 a	6.63 a	11.11 a	20.06 a	27.72 a
	24	-0.73 c	2.67 b	5.87 a	12.67 a	17.74 a	2.76 b	6.15 a	13.99 a	19.81 a	4.78 a	9.22 a	17.96 a	25.54 a
16	12	1.18 b	4.32 a	7.47 a	14.12 a	19.06 a	4.47 a	7.72 a	15.38 a	21.12 a	6.47 a	10.81 a	19.43 a	26.47 a
	16	-0.01 c	3.23 b	6.33 a	12.88 a	17.76 a	3.34 b	6.6 a	14.14 a	19.81 a	5.3 a	9.62 a	18.11 a	25.11 a
	24	-2.38 e	1.06 d	4.06 c	10.39 b	15.17 a	1.08 d	4.38 c	11.66 a	17.21 a	2.97 c	7.23 b	15.46 a	22.39 a

See Combined Axial and Lateral Load Table Notes

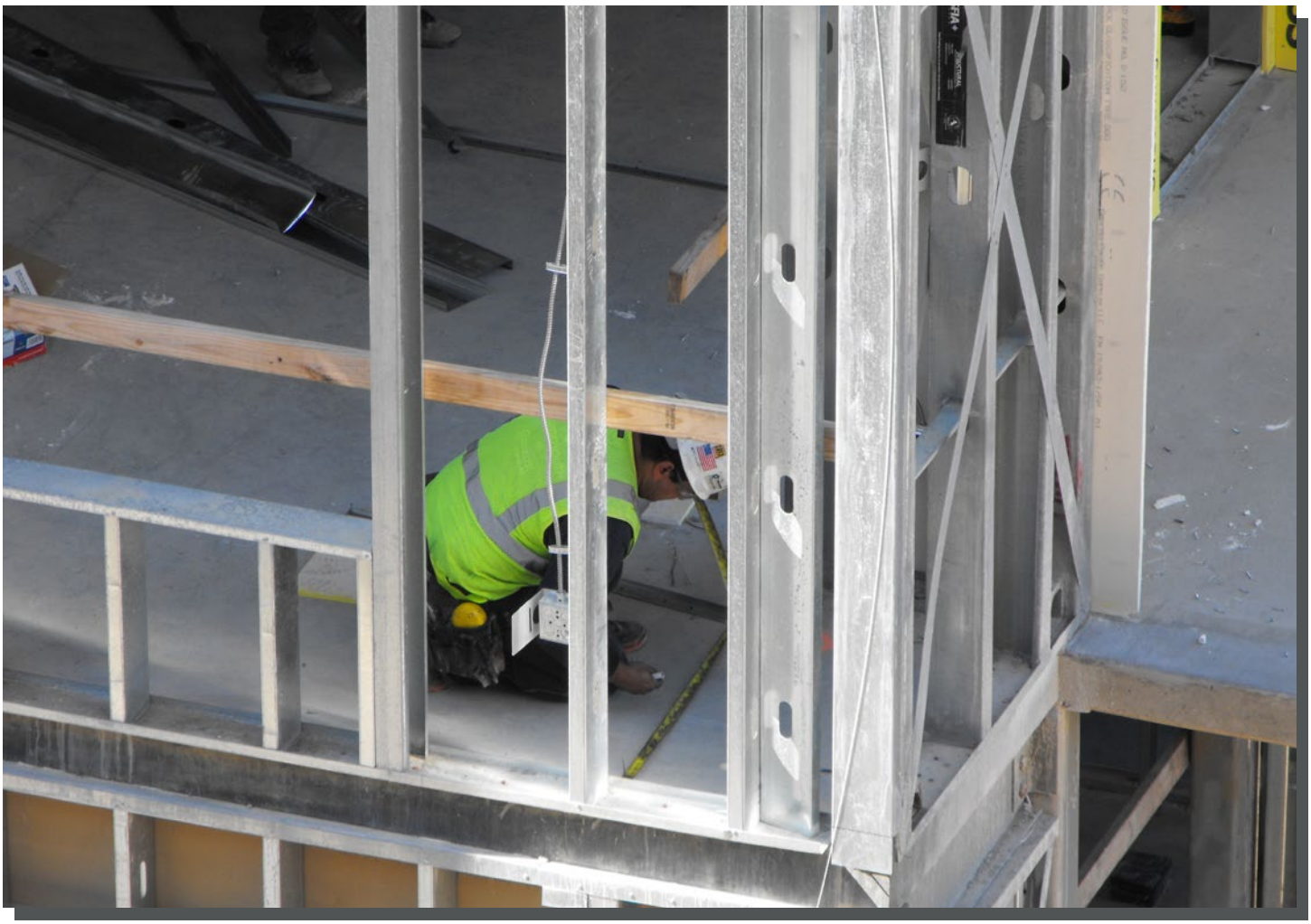

Floor and Roof Joist Span Tables

Allowable Floor and Roof Joist Span Table Notes

1. All loads are computed in accordance with AISI S100-16/S2-20, North American Standard for Design of Cold-Formed Steel Structural Members.
2. Total loads are for single span condition and are limited by allowable bending stress or allowable end shear. Live loads are limited by allowable bending stress, allowable end shear, or by deflection on 1/360 of span.
3. Total load values in table are based on maximum allowable stress only. To limit total load deflection to 1/240 of span, multiply live load value shown by 1.5.
4. For two equal continuous spans, the total load shown in these tables will not change. The live load shown may be increased by a factor of 2.4 to maintain the L/360 live load deflection limit, however neither the live load nor total load can exceed the total load shown. Combined bending and shear stresses should be investigated by the designer.
5. Joists must be braced against rotation at all supports.
6. End web crippling check is based on 3.5 inch end bearing. Joist flanges must be fastened to the support.
7. Spans are based on continuous support of compression flange over the full length of the joist.
8. End shear and web crippling capacity have not been reduced for punchouts.
9. "a" indicates that web stiffeners are required at all supports.
10. Allowable flexural strength values in the tables are based on the minimum of local, distortional, and lateral-torsional buckling. Distortional buckling strength is based on a $k\varphi=0$. Higher values may be obtained when sheathing is applied to the joists resulting in a higher $k\varphi$ value.

Allowable Uniform Load Table (plf) - Simple Span Joists

BLACK numbers = Total Load; RED numbers = Live Load (See Note 3)

Member	Fy (ksi)	Span (ft)																
		6'-0''	7'-0''	8'-0''	9'-0''	10'-0''	11'-0''	12'-0''	13'-0''	14'-0''	15'-0''	16'-0''	17'-0''	18'-0''	19'-0''	20'-0''	22'-0''	24'-0''
600S162-33	33	168	124	95	75	61	50	42	36	31	27	24	21	19	17	15	13	11
		168	124	95	75	61	50	42	36	29	23	19	16	13	11	10	7	6
600S200-33	33	193	142	109	86	70	57	48	41	35	31	27	24	21	19	17	14	12
		193	142	109	86	70	57	48	41	33	27	22	18	15	13	11	8	7
600S162-43	33	252	185	142	112	91	75	63	54	46	40	35	31	28	25	23	19	16
		252	185	142	112	91	75	59	46	37	30	25	21	17	15	13	10	7
600S200-43	33	276	203	155	123	99	82	69	59	51	44	39	34	31	27	25	21	17
		276	203	155	123	99	82	68	53	43	35	29	24	20	17	15	11	8
600S250-43	33	291	214	164	129	105	87	73	62	53	47	41	36	32	29	26	22	18
		291	214	164	129	105	87	73	61	49	40	33	27	23	20	17	13	10
600S162-54	50	426	313	240	189	153	127	107	91	78	68	60	53	47	43	38	32	27
		426	313	240	172	125	94	72	57	46	37	31	25	21	18	16	12	9
600S200-54	50	487	358	274	217	175	145	122	104	90	78	69	61	54	49	44	36	30
		487	358	274	199	145	109	84	66	53	43	35	30	25	21	18	14	10
600S250-54	50	513	377	289	228	185	153	128	109	94	82	72	64	57	51	46	38	32
		513	377	289	226	165	124	95	75	60	49	40	34	28	24	21	15	12
600S162-68	50	612	450	344	272	220	182	153	130	112	98	86	76	68	61	55	46	38
		612	449	301	211	154	116	89	70	56	46	38	31	26	22	19	14	11
600S200-68	50	657	483	370	292	237	195	164	140	121	105	92	82	73	66	59	49	41
		657	483	350	246	179	135	104	82	65	53	44	36	31	26	22	17	13
600S250-68	50	697	512	392	310	251	207	174	148	128	111	98	87	77	69	63	52	44
		697	512	392	283	207	155	120	94	75	61	50	42	35	30	26	19	15
600S162-97	50	1005	738	565	447	362	299	251	214	185	161	141	125	112	100	90	75	63
		971	612	410	288	210	158	121	95	76	62	51	43	36	31	26	20	15
600S200-97	50	1127	828	634	501	406	335	282	240	207	180	158	140	125	112	101	84	70
		1127	715	479	337	245	184	142	112	89	73	60	50	42	36	31	23	18
600S250-97	50	1096	805	616	487	395	326	274	233	201	175	154	137	122	109	99	82	68
		1096	805	555	390	284	213	164	129	104	84	69	58	49	41	36	27	21
600S162-118	50	1207 a	933	714	564	457	378	317	271	233	203	179	158	141	127	114	94	79
		1145 a	721	483	339	247	186	143	113	90	73	60	50	42	36	31	23	18
600S200-118	50	1207 a	1035 a	811	641	519	429	361	307	265	231	203	180	160	144	130	107	90
		1207 a	847 a	567	398	290	218	168	132	106	86	71	59	50	42	36	27	21
600S250-118	50	1207 a	1026	785	620	503	415	349	297	256	223	196	174	155	139	126	104	87
		1207 a	983	659	463	337	253	195	154	123	100	82	69	58	49	42	32	24
800S162-33[1]	33	126 a	108 a	95 a	84	68	56	47	40	35	30	26	23	21	19	17	14	12
		126 a	108 a	95 a	84	68	56	47	40	35	30	26	23	21	19	17	14	11
800S200-33[1]	33	126 a	108 a	95 a	84 a	76 a	65	54	46	40	35	31	27	24	22	20	16	14
		126 a	108 a	95 a	84 a	76 a	65	54	46	40	35	31	27	24	22	20	16	13
800S162-43	33	326	240	184	145	117	97	82	70	60	52	46	41	36	33	29	24	20
		326	240	184	145	117	97	82	70	60	52	46	40	34	29	25	18	14
800S200-43	33	350 a	277	212	167	136	112	94	80	69	60	53	47	42	38	34	28	24
		350 a	277	212	167	136	112	94	80	69	60	53	47	40	34	29	22	17
800S250-43	33	350 a	291	223	176	143	118	99	84	73	63	56	49	44	40	36	29	25
		350 a	291	223	176	143	118	99	84	73	63	56	49	44	38	33	25	19
800S162-54	50	580	426	326	258	209	173	145	124	107	93	82	72	64	58	52	43	36
		580	426	326	258	209	173	142	112	89	73	60	50	42	36	31	23	18
800S200-54	50	667	490	375	296	240	198	167	142	122	107	94	83	74	67	60	50	42
		667	490	375	296	240	198	166	131	105	85	70	58	49	42	36	27	21
800S250-54	50	697 a	515	394	311	252	208	175	149	129	112	99	87	78	70	63	52	44
		697 a	515	394	311	252	208	175	147	118	96	79	66	55	47	40	30	23
800S162-68	50	794	584	447	353	286	236	199	169	146	127	112	99	88	79	71	59	50
		794	584	447	353	286	232	179	141	113	92	75	63	53	45	39	29	22
800S200-68	50	910	668	512	404	328	271	227	194	167	146	128	113	101	91	82	68	57
		910	668	512	404	328	267	206	162	130	105	87	72	61	52	44	33	26
800S250-68	50	960	705	540	427	346	286	240	205	176	154	135	120	107	96	86	71	60
		960	705	540	427	346	286	234	184	147	120	99	82	69	59	51	38	29

See Allowable Floor Joist Span Table Notes

Allowable Uniform Load Table (plf) - Simple Span Joists

BLACK numbers = Total Load; RED numbers = Live Load (See Note 3)

Member	Fy (ksi)	Span (ft)																
		6'-0''	7'-0''	8'-0''	9'-0''	10'-0''	11'-0''	12'-0''	13'-0''	14'-0''	15'-0''	16'-0''	17'-0''	18'-0''	19'-0''	20'-0''	22'-0''	24'-0''
800S162-97	50	1385	1017	779	615	498	412	346	295	254	222	195	172	154	138	125	103	87
		1385	1017	779	583	425	319	246	193	155	126	104	86	73	62	53	40	31
800S200-97	50	1589	1168	894	706	572	473	397	339	292	254	224	198	177	159	143	118	99
		1589	1168	894	672	490	368	283	223	178	145	120	100	84	71	61	46	35
800S250-97	50	1537	1129	865	683	553	457	384	327	282	246	216	192	171	153	138	114	96
		1537	1129	865	683	553	420	324	254	204	166	136	114	96	82	70	53	40
800S162-118	50	1868	1372	1051	830	672	556	467	398	343	299	263	233	208	186	168	139	117
		1868	1372	983	690	503	378	291	229	183	149	123	102	86	73	63	47	36
800S200-118	50	2080	1528	1170	925	749	619	520	443	382	333	293	259	231	207	187	155	130
		2080	1528	1137	799	582	437	337	265	212	173	142	119	100	85	73	55	42
800S250-118	50	1982	1456	1115	881	714	590	496	422	364	317	279	247	220	198	178	147	124
		1982	1456	1115	881	666	501	386	303	243	197	163	136	114	97	83	63	48

See Allowable Floor Joist Span Table Notes



Allowable Uniform Load Table (plf) - Simple Span Joists

BLACK numbers = Total Load; RED numbers = Live Load (See Note 3)

Member	Fy (ksi)	Span (ft)																
		11'-0''	12'-0''	13'-0''	14'-0''	15'-0''	16'-0''	17'-0''	18'-0''	19'-0''	20'-0''	22'-0''	24'-0''	26'-0''	28'-0''	30'-0''	32'-0''	34'-0''
1000S162-43[1]	33	100	84	71	62	54	47	42	37	33	30	25	21	18	15	13	12	10
		100	84	71	62	54	47	42	37	33	30	25	21	18	15	12	10	8
1000S200-43[1]	33	117	98	84	72	63	55	49	44	39	35	29	25	21	18	16	14	12
		117	98	84	72	63	55	49	44	39	35	29	25	21	17	14	11	10
1000S250-43[1]	33	122 a	104	88	76	66	58	52	46	41	37	31	26	22	19	17	15	13
		122 a	104	88	76	66	58	52	46	41	37	31	26	22	19	17	14	11
1000S162-54	50	213	179	153	132	115	101	89	80	71	64	53	45	38	33	29	25	22
		213	179	153	132	115	100	84	71	60	51	39	30	23	19	15	13	10
1000S200-54	50	248	209	178	153	134	117	104	93	83	75	62	52	44	38	33	29	26
		248	209	178	153	134	115	96	81	69	59	44	34	27	21	17	14	12
1000S250-54	50	263	221	188	162	141	124	110	98	88	79	66	55	47	41	35	31	27
		263	221	188	162	141	124	110	95	81	69	52	40	32	25	21	17	14
1000S162-68	50	296	249	212	183	159	140	124	111	99	90	74	62	53	46	40	35	31
		296	249	212	183	155	128	107	90	76	65	49	38	30	24	19	16	13
1000S200-68	50	342	288	245	211	184	162	143	128	115	104	86	72	61	53	46	40	36
		342	288	245	211	177	146	122	102	87	75	56	43	34	27	22	18	15
1000S250-68	50	363	305	260	224	195	172	152	136	122	110	91	76	65	56	49	43	38
		363	305	260	224	195	168	140	118	100	86	65	50	39	31	25	21	18
1000S162-97	50	483	406	346	298	260	228	202	180	162	146	121	102	86	75	65	57	51
		483	406	338	270	220	181	151	127	108	93	70	54	42	34	27	23	19
1000S200-97	50	554	465	396	342	298	262	232	207	186	167	138	116	99	85	74	65	58
		554	465	385	308	250	206	172	145	123	106	79	61	48	39	31	26	22
1000S250-97	50	590	496	423	364	317	279	247	220	198	179	148	124	106	91	79	70	62
		590	496	423	348	283	233	194	164	139	119	90	69	54	43	35	29	24
1000S162-118	50	664	558	476	410	357	314	278	248	223	201	166	140	119	103	89	78	70
		663	510	401	321	261	215	179	151	129	110	83	64	50	40	33	27	22
1000S200-118	50	759	638	543	469	408	359	318	283	254	230	190	159	136	117	102	90	79
		757	583	459	367	299	246	205	173	147	126	95	73	57	46	37	31	26
1000S250-118	50	769	646	551	475	414	364	322	287	258	233	192	162	138	119	103	91	81
		769	646	519	416	338	278	232	195	166	143	107	82	65	52	42	35	29
1200S162-54[1]	50	200 a	174	148	128	111	98	87	77	69	63	52	43	37	32	28	24	22
		200 a	174	148	128	111	98	87	77	69	63	52	43	36	29	23	19	16
1200S200-54[1]	50	200 a	184 a	170 a	151	131	115	102	91	82	74	61	51	44	38	33	29	26
		200 a	184 a	170 a	151	131	115	102	91	82	74	61	51	41	33	26	22	18
1200S250-54[1]	50	200 a	184 a	170 a	157 a	140	123	109	97	87	79	65	55	47	40	35	31	27
		200 a	184 a	170 a	157 a	140	123	109	97	87	79	65	55	46	37	30	25	21
1200S162-68	50	348	293	249	215	187	165	146	130	117	105	87	73	62	54	47	41	36
		348	293	249	215	187	165	146	130	117	101	76	58	46	37	30	25	20
1200S200-68	50	407	342	292	251	219	193	171	152	137	123	102	86	73	63	55	48	43
		407	342	292	251	219	193	171	152	133	114	86	66	52	42	34	28	23
1200S250-68	50	436	366	312	269	234	206	182	163	146	132	109	91	78	67	59	51	46
		436	366	312	269	234	206	182	163	146	129	97	75	59	47	38	31	26
1200S162-97	50	581	488	416	358	312	274	243	217	195	176	145	122	104	90	78	69	61
		581	488	416	358	312	274	238	200	170	146	110	85	67	53	43	36	30
1200S200-97	50	671	564	481	414	361	317	281	251	225	203	168	141	120	104	90	79	70
		671	564	481	414	361	317	269	226	192	165	124	95	75	60	49	40	34
1200S250-97	50	719	604	515	444	387	340	301	269	241	218	180	151	129	111	97	85	75
		719	604	515	444	387	340	301	254	216	185	139	107	84	67	55	45	38

See Allowable Floor Joist Span Table Notes

Allowable Uniform Load Table (plf) - Simple Span Joists

BLACK numbers = Total Load; RED numbers = Live Load (See Note 3)

Member	Fy (ksi)	Span (ft)																	
		11'-0''	12'-0''	13'-0''	14'-0''	15'-0''	16'-0''	17'-0''	18'-0''	19'-0''	20'-0''	22'-0''	24'-0''	26'-0''	28'-0''	30'-0''	32'-0''	34'-0''
1200S162-118	50	765	643	548	472	411	362	320	286	256	231	191	161	137	118	103	90	80
		765	643	548	472	411	343	286	241	205	176	132	102	80	64	52	43	36
1200S200-118	50	881	740	631	544	474	416	369	329	295	266	220	185	158	136	118	104	92
		881	740	631	544	471	388	323	272	232	199	149	115	90	72	59	48	40
1200S250-118	50	947	796	678	585	509	448	396	354	317	286	237	199	169	146	127	112	99
		947	796	678	585	509	435	362	305	260	223	167	129	101	81	66	54	45
1200S300-118	50	993	834	711	613	534	469	416	371	333	300	248	209	178	153	134	117	104
		993	834	711	613	534	469	401	338	287	246	185	143	112	90	73	60	50
1200S350-118	50	1197	1006	857	739	644	566	501	447	401	362	299	252	214	185	161	141	125
		1197	1006	857	739	644	555	463	390	331	284	213	164	129	104	84	69	58
1400S200-54[1]	50	171 a	157 a	145 a	134 a	125 a	118 a	111 a	103	92	83	69	58	49	43	37	33	29
		171 a	157 a	145 a	134 a	125 a	118 a	111 a	103	92	83	69	58	49	43	37	31	26
1400S250-54[1]	50	171 a	157 a	145 a	134 a	125 a	118 a	111 a	105 a	99 a	90	74	63	53	46	40	35	31
		171 a	157 a	145 a	134 a	125 a	118 a	111 a	105 a	99 a	90	74	63	53	46	40	35	29
1400S300-54[1]	50	171 a	157 a	145 a	134 a	125 a	118 a	111 a	105 a	99 a	94 a	78	65	56	48	42	37	33
		171 a	157 a	145 a	134 a	125 a	118 a	111 a	105 a	99 a	94 a	78	65	56	48	42	36	30
1400S200-68	50	430 a	390	332	287	250	219	194	173	156	140	116	98	83	72	62	55	49
		430 a	390	332	287	250	219	194	173	156	140	116	94	74	59	48	40	33
1400S250-68	50	430 a	394 a	359	310	270	237	210	187	168	152	125	105	90	77	67	59	53
		430 a	394 a	359	310	270	237	210	187	168	152	125	105	84	67	54	45	37
1400S300-68	50	430 a	394 a	364 a	325	283	249	220	196	176	159	131	110	94	81	71	62	55
		430 a	394 a	364 a	325	283	249	220	196	176	159	131	110	91	73	59	49	41
1400S200-97	50	778	654	557	480	419	368	326	291	261	235	195	163	139	120	105	92	81
		778	654	557	480	419	368	326	291	261	235	179	138	109	87	71	58	49
1400S250-97	50	840	706	602	519	452	397	352	314	282	254	210	177	150	130	113	99	88
		840	706	602	519	452	397	352	314	282	254	200	154	121	97	79	65	54
1400S300-97	50	883	742	632	545	475	417	370	330	296	267	221	185	158	136	119	104	92
		883	742	632	545	475	417	370	330	296	267	219	169	133	106	86	71	59
1400S200-118	50	1032	867	739	637	555	488	432	385	346	312	258	217	185	159	139	122	108
		1032	867	739	637	555	488	432	385	341	293	220	169	133	107	87	71	60
1400S250-118	50	1116	938	799	689	600	528	467	417	374	338	279	235	200	172	150	132	117
		1116	938	799	689	600	528	467	417	374	325	244	188	148	119	96	79	66
1400S300-118	50	1175	988	842	726	632	556	492	439	394	356	294	247	210	181	158	139	123
		1175	988	842	726	632	556	492	439	394	356	269	207	163	131	106	87	73
1600S200-68[1]	50	300 a	275 a	254 a	236 a	220 a	203	180	160	144	130	107	90	77	66	58	51	45
		300 a	275 a	254 a	236 a	220 a	203	180	160	144	130	107	90	77	66	58	51	45
1600S250-68[1]	50	300 a	275 a	254 a	236 a	220 a	206 a	194 a	175	157	142	117	98	84	72	63	55	49
		300 a	275 a	254 a	236 a	220 a	206 a	194 a	175	157	142	117	98	84	72	63	55	49
1600S300-68[1]	50	300 a	275 a	254 a	236 a	220 a	206 a	194 a	183 a	166	150	124	104	88	76	66	58	52
		300 a	275 a	254 a	236 a	220 a	206 a	194 a	183 a	166	150	124	104	88	76	66	58	52
1600S350-68[1]	50	300 a	275 a	254 a	236 a	220 a	206 a	194 a	183 a	174 a	165 a	150 a	130	111	96	83	73	65
		300 a	275 a	254 a	236 a	220 a	206 a	194 a	183 a	174 a	165 a	150 a	130	111	96	83	73	64
1600S200-97	50	874	734	626	539	470	413	366	326	293	264	218	184	156	135	117	103	91
		874	734	626	539	470	413	366	326	293	264	218	184	149	119	97	80	67
1600S250-97	50	951	799	681	587	511	450	398	355	319	288	238	200	170	147	128	112	100
		951	799	681	587	511	450	398	355	319	288	238	200	166	133	108	89	74
1600S300-97	50	1006	845	720	621	541	475	421	376	337	304	251	211	180	155	135	119	105
		1006	845	720	621	541	475	421	376	337	304	251	211	180	145	118	97	81
1600S350-97	50	1099 a	1007 a	883	761	663	583	516	461	413	373	308	259	221	190	166	146	129
		1099 a	1007 a	883	761	663	583	516	461	413	373	308	259	208	167	136	112	93

See Allowable Floor Joist Span Table Notes

Allowable Uniform Load Table (plf) - Simple Span Joists

BLACK numbers = Total Load; RED numbers = Live Load (See Note 3)

Member	Fy (ksi)	Span (ft)																
		11'-0''	12'-0''	13'-0''	14'-0''	15'-0''	16'-0''	17'-0''	18'-0''	19'-0''	20'-0''	22'-0''	24'-0''	26'-0''	28'-0''	30'-0''	32'-0''	34'-0''
1600S200-118	50	1170	983	837	722	629	553	490	437	392	354	292	246	209	181	157	138	122
		1170	983	837	722	629	553	490	437	392	354	292	234	184	148	120	99	82
1600S250-118	50	1274	1071	912	787	685	602	533	476	427	385	319	268	228	197	171	151	133
		1274	1071	912	787	685	602	533	476	427	385	319	259	204	163	133	109	91
1600S300-118	50	1349	1134	966	833	726	638	565	504	452	408	337	283	241	208	181	159	141
		1349	1134	966	833	726	638	565	504	452	408	337	283	224	179	146	120	100
1600S350-118	50	1633	1372	1169	1008	878	772	684	610	547	494	408	343	292	252	220	193	171
		1633	1372	1169	1008	878	772	684	610	547	494	408	324	255	204	166	137	114

See Allowable Floor Joist Span Table Notes



Header Load Tables

Header Load Table Notes

1. Calculated properties are based on AISI S100-16/S2-20, North American Standard for Design of Cold-Formed Steel Structural Members.
2. Allowable deflection limit is L/360.
3. Allowable capacities have not been modified for wind or earthquake loading.
4. Headers are made from two "boxed" or back-to-back members.
5. Allowable moment, shear, and web crippling capacities are based on twice the capacity of a single member. The moment of inertia is based on twice the value of the single member.
6. Minimum bearing length for web crippling = 1-inch.
7. Capacities are calculated for unpunched members only.
8. Members are assumed adequately braced for bending.
9. Allowable loads are for simply supported headers with unitform bending loads only.
10. "e" web stiffeners are required at each support.

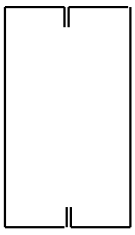

Boxed Header

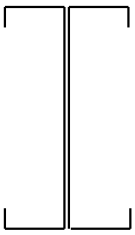

Back-to-Back “I” Header

Header Allowable Uniform Loads (lb/ft)

Section	Yield, Fy, ksi	Span						
		3 (ft)	4 (ft)	5 (ft)	6 (ft)	8 (ft)	10 (ft)	12 (ft)
550S162-33	33	931 e	698 e	535 e	371 e	209 e	127 e	74 e
550S162-43	33	2066 e	1203 e	770 e	535 e	301 e	165 e	95 e
550S162-54	33	2761 e	1553 e	994 e	690 e	388 e	203 e	118
550S162-54	50	3617 e	2034 e	1302 e	904 e	397 e	203 e	118
550S162-68	50	5032 e	2831 e	1812 e	1158 e	489 e	250 e	145
600S137-33	33	850 e	638 e	465 e	323 e	182 e	116 e	78 e
600S162-33	33	851 e	638 e	510 e	420 e	236 e	151 e	91 e
600S200-33	33	851 e	638 e	510 e	425 e	251 e	161 e	104 e
600S137-43	33	1860 e	1046 e	670 e	465 e	262 e	167 e	103 e
600S162-43	33	1887 e	1357 e	869 e	603 e	339 e	202 e	117 e
600S200-43	33	1887 e	1415 e	915 e	636 e	358 e	229 e	136 e
600S250-43	33	1887 e	1415 e	958 e	665 e	374 e	240 e	156 e
600S137-54	33	2419 e	1361 e	871 e	605 e	340 e	218 e	127
600S137-54	50	3393 e	1909 e	1222 e	848 e	430 e	220 e	127
600S162-54	33	3119 e	1754 e	1123 e	780 e	439 e	250 e	145 e
600S162-54	50	3763 e	2299 e	1472 e	1022 e	488 e	250 e	145 e
600S200-54	33	3550 e	1997 e	1278 e	887 e	499 e	290 e	168 e
600S200-54	50	3763 e	2514 e	1609 e	1117 e	567 e	290 e	168 e
600S250-54	33	3364 e	1892 e	1211 e	841 e	473 e	303 e	193 e
600S250-54	50	3763 e	2630 e	1683 e	1169 e	644 e	330 e	191 e
600S137-68	50	4540 e	2554 e	1635 e	1135 e	528 e	271 e	157
600S162-68	50	5685 e	3198 e	2046 e	1421 e	602 e	308 e	178
600S200-68	50	5906 e	3322 e	2126 e	1476 e	700 e	358 e	207 e
600S250-68	50	6089 e	3425 e	2192 e	1522 e	807 e	413 e	239 e
600S137-97	50	7480 e	4208 e	2693 e	1696 e	715	366	212
600S162-97	50	8358 e	4702 e	3009 e	1942 e	819	420	243
600S200-97	50	9517 e	5353 e	3426 e	2272 e	959 e	491	284
600S250-97	50	9174 e	5160 e	3303 e	2293 e	1110 e	568	329
600S162-118	50	10159 e	5715 e	3657 e	2289 e	966	495	286
600S200-118	50	11568 e	6507 e	4165 e	2690 e	1135	581	336
600S250-118	50	11321 e	6368 e	4076 e	2830 e	1318 e	675	390
800S137-33[1]	33	632 e	474 e	379 e	316 e	208 e	133 e	93 e
800S162-33[1]	33	632 e	474 e	379 e	316 e	237 e	153 e	106 e
800S200-33[1]	33	632 e	474 e	379 e	316 e	237 e	174 e	121 e
800S137-43	33	1401 e	1051 e	841 e	641 e	361 e	231 e	160 e
800S162-43	33	1401 e	1051 e	841 e	701 e	412 e	264 e	183 e
800S200-43	33	1401 e	1051 e	841 e	701 e	526 e	339 e	236 e
800S250-43	33	1401 e	1051 e	841 e	701 e	526 e	341 e	237 e
800S137-54	33	2788 e	1916 e	1226 e	852 e	479 e	307 e	213 e
800S137-54	50	2788 e	2091 e	1673 e	1173 e	660 e	422 e	252 e
800S162-54	33	2788 e	2091 e	1391 e	966 e	543 e	348 e	241 e
800S162-54	50	2788 e	2091 e	1673 e	1336 e	752 e	481 e	284 e
800S200-54	33	2788 e	2091 e	1673 e	1321 e	743 e	476 e	330 e
800S200-54	50	2788 e	2091 e	1673 e	1394 e	925 e	575 e	332 e
800S250-54	33	2788 e	2091 e	1673 e	1246 e	701 e	449 e	312 e
800S250-54	50	2788 e	2091 e	1673 e	1394 e	929 e	595 e	374 e
800S137-68	50	5627 e	3621 e	2318 e	1610 e	905 e	550 e	318 e
800S162-68	50	5627 e	4110 e	2631 e	1827 e	1028 e	618 e	358 e
800S200-68	50	5627 e	4220 e	3176 e	2205 e	1240 e	712 e	412 e
800S250-68	50	5627 e	4220 e	3268 e	2270 e	1277 e	809 e	468 e
800S137-97	50	10850 e	6103 e	3906 e	2712 e	1468 e	752 e	435
800S162-97	50	12255 e	6894 e	4412 e	3064 e	1659 e	849 e	491
800S200-97	50	14283 e	8034 e	5142 e	3571 e	1913 e	980 e	567
800S250-97	50	13603 e	7652 e	4897 e	3401 e	1913 e	1118 e	647 e
800S162-118	50	15551 e	8748 e	5598 e	3888 e	1965 e	1006 e	582
800S200-118	50	17437 e	9808 e	6277 e	4359 e	2274 e	1164 e	674
800S250-118	50	16794 e	9447 e	6046 e	4199 e	2362 e	1333 e	771

1 e = web stiffeners required at each support

See Header Load Table Notes

Header Allowable Uniform Loads (lb/ft)

Section	Yield, Fy, ksi	Span						
		3 (ft)	4 (ft)	5 (ft)	6 (ft)	8 (ft)	10 (ft)	12 (ft)
1000S162-43[1]	33	1115 e	836 e	669 e	557 e	418 e	280 e	194 e
1000S200-43[1]	33	1115 e	836 e	669 e	557 e	418 e	317 e	220 e
1000S250-43[1]	33	1115 e	836 e	669 e	557 e	418 e	334 e	241 e
1000S162-54	33	2213 e	1660 e	1328 e	1107 e	697 e	446 e	310 e
1000S162-54	50	2213 e	1660 e	1328 e	1107 e	830 e	611 e	424 e
1000S200-54	33	2213 e	1660 e	1328 e	1107 e	806 e	516 e	358 e
1000S200-54	50	2213 e	1660 e	1328 e	1107 e	830 e	663 e	460 e
1000S250-54	33	2213 e	1660 e	1328 e	1107 e	830 e	594 e	412 e
1000S250-54	50	2213 e	1660 e	1328 e	1107 e	830 e	664 e	505 e
1000S162-68	50	4460 e	3345 e	2676 e	2230 e	1323 e	847 e	588 e
1000S200-68	50	4460 e	3345 e	2676 e	2230 e	1490 e	954 e	662 e
1000S250-68	50	4460 e	3345 e	2676 e	2230 e	1673 e	1092 e	759 e
1000S162-97	50	13149 e	8120 e	5197 e	3609 e	2030 e	1299 e	858 e
1000S200-97	50	13149 e	9298 e	5950 e	4132 e	2324 e	1488 e	978 e
1000S250-97	50	13149 e	9862 e	6709 e	4659 e	2621 e	1677 e	1104 e
1000S162-118	50	19372 e	10897 e	6974 e	4843 e	2724 e	1743 e	1021 e
1000S200-118	50	21652 e	12453 e	7970 e	5534 e	3113 e	1992 e	1166 e
1000S250-118	50	21652 e	12938 e	8280 e	5750 e	3234 e	2070 e	1320 e
1200S162-54[1]	33	1836 e	1377 e	1102 e	918 e	689 e	454 e	315 e
1200S162-54[1]	50	1836 e	1377 e	1102 e	918 e	689 e	551 e	433 e
1200S200-54[1]	33	1836 e	1377 e	1102 e	918 e	689 e	524 e	364 e
1200S200-54[1]	50	1836 e	1377 e	1102 e	918 e	689 e	551 e	459 e
1200S250-54[1]	33	1836 e	1377 e	1102 e	918 e	689 e	534 e	371 e
1200S250-54[1]	50	1836 e	1377 e	1102 e	918 e	689 e	551 e	459 e
1200S162-68	50	3693 e	2770 e	2216 e	1847 e	1385 e	1034 e	718 e
1200S200-68	50	3693 e	2770 e	2216 e	1847 e	1385 e	1108 e	807 e
1200S250-68	50	3693 e	2770 e	2216 e	1847 e	1385 e	1108 e	814 e
1200S162-97	50	10860 e	8145 e	6476 e	4497 e	2530 e	1619 e	1124 e
1200S200-97	50	10860 e	8145 e	6516 e	5130 e	2886 e	1847 e	1283 e
1200S250-97	50	10860 e	8145 e	6516 e	5430 e	3117 e	1995 e	1385 e
1200S162-118	50	19976 e	12852 e	8225 e	5712 e	3213 e	2056 e	1428 e
1200S200-118	50	19976 e	14591 e	9338 e	6485 e	3648 e	2335 e	1621 e
1200S250-118	50	19976 e	14982 e	10438 e	7249 e	4077 e	2609 e	1812 e
1200S300-118	50	19976 e	14982 e	11551 e	8022 e	4512 e	2888 e	2005 e
1200S350-118	50	19976 e	14982 e	11986 e	9241 e	5198 e	3327 e	2310 e
1400S200-54[1]	33	1568 e	1176 e	941 e	784 e	588 e	470 e	392 e
1400S200-54[1]	50	1568 e	1176 e	941 e	784 e	588 e	470 e	392 e
1400S250-54[1]	33	1568 e	1176 e	941 e	784 e	588 e	470 e	392 e
1400S250-54[1]	50	1568 e	1176 e	941 e	784 e	588 e	470 e	392 e
1400S300-54[1]	33	1568 e	1176 e	941 e	784 e	588 e	470 e	392 e
1400S300-54[1]	50	1568 e	1176 e	941 e	784 e	588 e	470 e	392 e
1400S200-68	50	3152 e	2364 e	1891 e	1576 e	1182 e	946 e	788 e
1400S250-68	50	3152 e	2364 e	1891 e	1576 e	1182 e	946 e	788 e
1400S300-68	50	3152 e	2364 e	1891 e	1576 e	1182 e	946 e	788 e
1400S200-97	50	9251 e	6938 e	5550 e	4625 e	3444 e	2204 e	1531 e
1400S250-97	50	9251 e	6938 e	5550 e	4625 e	3469 e	2373 e	1648 e
1400S300-97	50	9251 e	6938 e	5550 e	4625 e	3469 e	2516 e	1747 e
1400S200-118	50	16991 e	12743 e	10194 e	7825 e	4401 e	2817 e	1956 e
1400S250-118	50	16991 e	12743 e	10194 e	8495 e	4899 e	3135 e	2177 e
1400S300-118	50	16991 e	12743 e	10194 e	8495 e	5224 e	3344 e	2322 e
1600S200-68[1]	50	2749 e	2062 e	1650 e	1375 e	1031 e	825 e	687 e
1600S250-68[1]	50	2749 e	2062 e	1650 e	1375 e	1031 e	825 e	687 e
1600S300-68[1]	50	2749 e	2062 e	1650 e	1375 e	1031 e	825 e	687 e
1600S350-68[1]	50	2749 e	2062 e	1650 e	1375 e	1031 e	825 e	687 e

1 e = web stiffeners required at each support

See Header Load Table Notes

Header Allowable Uniform Loads (lb/ft)

Section	Yield, Fy, ksi	Span						
		3 (ft)	4 (ft)	5 (ft)	6 (ft)	8 (ft)	10 (ft)	12 (ft)
1600S200-97	50	8056 e	6042 e	4834 e	4028 e	3021 e	2417 e	1778 e
1600S250-97	50	8056 e	6042 e	4834 e	4028 e	3021 e	2417 e	1909 e
1600S300-97	50	8056 e	6042 e	4834 e	4028 e	3021 e	2417 e	2014 e
1600S350-97	50	8056 e	6042 e	4834 e	4028 e	3021 e	2417 e	2014 e
1600S200-118	50	14781 e	11086 e	8869 e	7391 e	5153 e	3298 e	2290 e
1600S250-118	50	14781 e	11086 e	8869 e	7391 e	5543 e	3660 e	2541 e
1600S300-118	50	14781 e	11086 e	8869 e	7391 e	5543 e	3895 e	2705 e
1600S350-118	50	14781 e	11086 e	8869 e	7391 e	5543 e	4434 e	3115 e

1 e = web stiffeners required at each support

See Header Load Table Notes



Web Crippling Load Tables

Web Crippling Load Table Notes

1. All capacities listed are calculated using AISI S100-16/S2-20.
2. Web crippling capacities calculated are for studs with stiffened or partially stiffened flanges.
3. Tabulated web crippling capacities are for single members only. For multiple members, multiply the tabulated values by number of members in the assembly.
4. Listed allowable capacities are based on members 'fastened to supports', except back-to-back members under two-flange loading (condition 3 and 4) for which data for 'fastened to support' is unavailable in the AISI S100-16/S2-20.
5. Listed allowable capacities are for unpunched webs. Capacity reduction for end and interior one flange loading (conditions 1 and 2) near punchouts may be required per Section G6 of S100.

Web Crippling Conditions

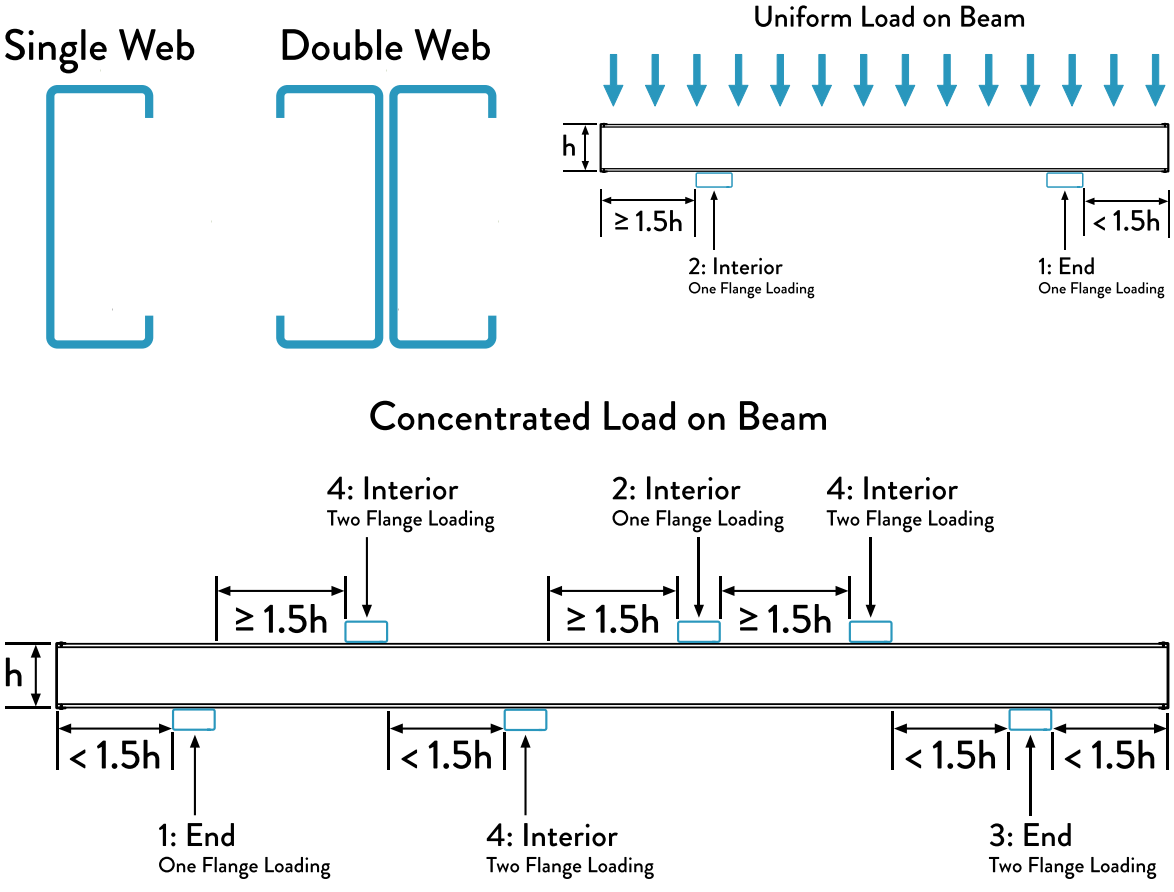

Allowable Web Crippling Loads (lbs) - Single Members

Member	Design Thickness	Inside Radius	Yield Str	Condition 1				Condition 2				Condition 3				Condition 4			
				1	3.5	4	6	1	3.5	4	6	1	3.5	4	6	1	3.5	4	6
162S - 18	0.0188	0.0843	33	55	90 [1]	95 [1,2]	112 [1,2]	87	125 [1]	131 [1,2]	151 [1,2]	45	64 [1]	67 [1,2]	76 [1,2]	122	161 [1]	166 [1,2]	187 [1,2]
162S - 27	0.0283	0.0796	33	122	194 [1]	205 [1]	242 [1,2]	218	304 [1]	317 [1]	361 [1,2]	111	151 [1]	157 [1]	178 [1,2]	290	371 [1]	383 [1]	425 [1,2]
162S - 30	0.0312	0.0781	33	148	233 [1]	246 [1]	290 [1]	269	373 [1]	388 [1]	442 [1]	137	185 [1]	192 [1]	217 [1]	356	452 [1]	466 [1]	516 [1]
162S - 33	0.0346	0.0764	33	180	282 [1]	297 [1]	350 [1]	336	462 [1]	481 [1]	546 [1]	170	229 [1]	237 [1]	267 [1]	441	557 [1]	574 [1]	634 [1]
162S - 43	0.0451	0.0712	33	298	459 [1]	483 [1]	566 [1]	589	793 [1]	823 [1]	929 [1]	297	390 [1]	404 [1]	452 [1]	764	946 [1]	973 [1]	1067 [1]
162S - 54	0.0566	0.0849	33	447	678 [1]	712 [1]	832 [1]	904	1196 [1]	1239 [1]	1390 [1]	471	609 [1]	629 [1]	700 [1]	1203	1466 [1]	1506 [1]	1642 [1]
162S - 54	0.0566	0.0849	50	677	1027 [1]	1079 [1]	1260 [1]	1370	1812 [1]	1877 [1]	2105 [1]	714	922 [1]	953 [1]	1061 [1]	1823	2222 [1]	2281 [1]	2487 [1]
162S - 68	0.0713	0.1069	33	672	1004 [1]	1054 [1]	1225 [1]	1386	1802 [1]	1863 [1]	2077 [1]	750	952 [1]	982 [1]	1087 [1]	1901	2282 [1]	2339 [1]	2536 [1]
162S - 68	0.0713	0.1069	50	1019	1522 [1]	1596 [1]	1856 [1]	2100	2730 [1]	2823 [1]	3148 [1]	1136	1443 [1]	1488 [1]	1646 [1]	2880	3458 [1]	3544 [1]	3842 [1]
250S - 18	0.0188	0.0843	33	52	84	89 [2]	106 [1,2]	85	122	128 [2]	147 [1,2]	37	51	54 [2]	61 [1,2]	109	145	150 [2]	168 [1,2]
250S - 27	0.0283	0.0796	33	117	186	196	231 [1,2]	213	298	310	354 [1,2]	96	130	135	153 [1,2]	268	343	354	393 [1,2]
250S - 30	0.0312	0.0781	33	141	223	235	277 [1]	264	366	381	433 [1]	119	161	167	189 [1]	330	420	433	479 [1]
250S - 33	0.0346	0.0764	33	173	271	285	336 [1]	330	453	472	535 [1]	150	201	209	235 [1]	411	519	535	591 [1]
250S - 43	0.0451	0.0712	33	287	443	466	547 [1]	580	780	810	913 [1]	267	351	364	407 [1]	720	892	918	1006 [1]
250S - 54	0.0566	0.0849	33	433	657	690	806 [1]	891	1178	1221	1369 [1]	430	556	574	639 [1]	1142	1392	1429	1558 [1]
250S - 54	0.0566	0.0849	50	656	996	1046	1222 [1]	1350	1785	1850	2075 [1]	652	842	870	968 [1]	1730	2109	2165	2361 [1]
250S - 68	0.0713	0.1069	33	654	977	1024	1191 [1]	1368	1778	1839	2050 [1]	693	880	907	1004 [1]	1815	2179	2233	2421 [1]
250S - 68	0.0713	0.1069	50	990	1480	1552	1805 [1]	2073	2694	2786	3106 [1]	1049	1333	1375	1521 [1]	2750	3302	3384	3669 [1]
350S - 18	0.0188	0.0843	33	49	80	84 [2]	100 [2]	83	119	124 [2]	143 [2]	28	40	42 [2]	48 [2]	98	130	134 [2]	151 [2]
350S - 27	0.0283	0.0796	33	112	177	187	221 [2]	209	292	304	347 [2]	81	111	115	130 [2]	247	316	327	362 [2]
350S - 30	0.0312	0.0781	33	135	214	226	266	259	359	374	425	103	139	144	163	306	389	402	445
350S - 33	0.0346	0.0764	33	166	260	274	323	324	445	463	526	131	175	182	205	384	484	499	551
350S - 43	0.0451	0.0712	33	278	428	451	528	571	768	798	900	240	315	326	365	680	842	866	949
350S - 54	0.0566	0.0849	33	420	638	670	783	879	1162	1204	1351	392	507	524	583	1086	1324	1359	1482
350S - 54	0.0566	0.0849	50	637	967	1016	1186	1331	1761	1825	2046	594	768	794	883	1645	2005	2059	2245
350S - 68	0.0713	0.1069	33	637	951	998	1160	1351	1756	1816	2025	640	813	839	928	1737	2085	2137	2317
350S - 68	0.0713	0.1069	50	965	1441	1512	1758	2047	2661	2752	3068	970	1232	1271	1406	2631	3159	3238	3510
350S - 97	0.1017	0.1525	33	1209	1760	1841	2126	2629	3328	3431	3792	1343	1663	1710	1876	3562	4184	4276	4597
350S - 97	0.1017	0.1525	50	1831	2666	2790	3221	3983	5042	5199	5745	2035	2520	2592	2842	5397	6339	6479	6966
362S - 18	0.0188	0.0843	33	49	79	84 [2]	99 [2]	82	119	124 [2]	143 [2]	27	39	40 [2]	46 [2]	97	128	133 [2]	149 [2]
362S - 27	0.0283	0.0796	33	111	177	186	220 [2]	209	291	303	346 [2]	80	108	113	127 [2]	245	313	324	359 [2]
362S - 30	0.0312	0.0781	33	135	213	224	265	258	358	373	424	101	136	141	160	304	386	398	441
362S - 33	0.0346	0.0764	33	165	259	273	322	323	444	462	525	129	173	179	202	381	480	495	547
362S - 43	0.0451	0.0712	33	277	427	449	526	570	767	796	898	236	311	322	360	675	836	860	943
362S - 54	0.0566	0.0849	33	419	636	668	780	877	1160	1202	1348	388	501	518	577	1079	1316	1351	1473
362S - 54	0.0566	0.0849	50	634	963	1012	1182	1329	1758	1822	2043	588	760	785	874	1635	1994	2047	2232
362S - 68	0.0713	0.1069	33	635	948	995	1157	1349	1754	1813	2022	635	806	831	920	1728	2074	2126	2305
362S - 68	0.0713	0.1069	50	962	1437	1507	1753	2044	2657	2748	3064	961	1221	1259	1393	2618	3143	3221	3492
362S - 97	0.1017	0.1525	33	1206	1755	1837	2120	2626	3324	3427	3787	1333	1651	1698	1862	3547	4166	4258	4578
362S - 97	0.1017	0.1525	50	1827	2659	2783	3212	3979	5036	5192	5738	2020	2501	2573	2821	5374	6313	6452	6937
400S - 27	0.0283	0.0796	33	109	174	183	217 [2]	207	289	301	344 [2]	75	102	106	120 [2]	238	305	315	349 [2]
400S - 30	0.0312	0.0781	33	133	210	221	261	257	356	370	421	95	129	134	151	296	376	388	429
400S - 33	0.0346	0.0764	33	163	256	269	317	322	442	460	522	122	164	170	192	372	469	483	534
400S - 43	0.0451	0.0712	33	274	422	444	520	567	763	792	893	227	299	309	346	662	819	843	924
400S - 54	0.0566	0.0849	33	415	629	661	772	873	1155	1197	1342	376	485	502	558	1061	1293	1328	1448
400S - 54	0.0566	0.0849	50	628	954	1002	1170	1323	1750	1813	2034	569	735	760	846	1607	1960	2012	2194
400S - 68	0.0713	0.1069	33	629	940	986	1147	1344	1746	1806	2014	617	784	809	895	1702	2044	2094	2271
400S - 68	0.0713	0.1069	50	953	1424	1494	1737	2036	2646	2737	3051	936	1188	1226	1356	2579	3097	3173	3441
400S - 97	0.1017	0.1525	33	1197	1742	1823	2105	2617	3312	3415	3774	1305	1616	1662	1823	3504	4116	4207	4523
400S - 97	0.1017	0.1525	50	1814	2640	2762	3189	3965	5018	5175	5718	1978	2449	2518	2761	5309	6236	6374	6853
550S - 27	0.0283	0.0796	33	103	164	173	205 [2]	202	282	294	336 [2]	58	79	82	93 [2]	214	274	283	314 [2]
550S - 30	0.0312	0.0781	33	126	199	210	248	251	348	362	412	76	103	107	120	268	341	351	389
550S - 33	0.0346	0.0764	33	155	243	256	302	315	432	450	511	100	134	139	157	339	428	441	487
550S - 43	0.0451	0.0712	33	262	405	426	499	556	749	778	877	195	256	265	297	614	760	782	858
550S - 54	0.0566	0.0849	33	400	607	638	745	859	1136	1177	1320	331	428	443	493	995	1213	1246	1358
550S - 54	0.0566	0.0849	50	606	920	966	1128	1302	1722	1784	2001	502	649	671	746	1508	1838	1887	2058

1 Bearing length to web height ratio, N/h, exceeds limit of 2.0

2 Bearing length to thickness ratio, N/t, exceeds limit of 210

See Web Crippling Load Table Notes

Allowable Web Crippling Loads (lbs) - Single Members

Member	Design Thickness	Inside Radius	Yield Str	Condition 1				Condition 2				Condition 3				Condition 4			
				1	3.5	4	6	1	3.5	4	6	1	3.5	4	6	1	3.5	4	6
550S - 68	0.0713	0.1069	33	609	911	955	1111	1324	1721	1780	1985	557	707	729	807	1611	1934	1982	2149
550S - 68	0.0713	0.1069	50	923	1380	1447	1683	2007	2608	2697	3007	844	1071	1105	1223	2441	2931	3003	3256
550S - 97	0.1017	0.1525	33	1166	1697	1776	2050	2585	3272	3374	3728	1205	1492	1535	1683	3352	3937	4024	4326
550S - 97	0.1017	0.1525	50	1766	2571	2691	3106	3917	4957	5112	5649	1826	2261	2326	2550	5079	5966	6097	6555
600S - 30	0.0312	0.0781	33	124	196	206	244	249	345	360	409	70	95	98	111	260	330	340	377
600S - 33	0.0346	0.0764	33	153	240	253	297	313	430	447	507	93	125	130	146	330	416	429	473
600S - 43	0.0451	0.0712	33	259	400	420	493	553	745	773	872	185	243	252	282	600	743	764	838
600S - 54	0.0566	0.0849	33	395	600	631	736	855	1131	1172	1314	318	411	425	473	975	1189	1221	1331
600S - 54	0.0566	0.0849	50	599	909	956	1116	1295	1713	1775	1991	482	623	644	716	1478	1802	1850	2017
600S - 68	0.0713	0.1069	33	604	902	946	1100	1319	1714	1772	1976	539	684	706	781	1584	1901	1949	2113
600S - 68	0.0713	0.1069	50	914	1366	1433	1666	1998	2596	2685	2994	816	1036	1069	1183	2399	2881	2952	3201
600S - 97	0.1017	0.1525	50	1752	2551	2669	3081	3902	4939	5093	5628	1781	2205	2268	2487	5010	5885	6014	6466
600S - 118	0.1242	0.1863	50	2528	3625	3788	4354	5698	7108	7318	8046	2734	3339	3429	3741	7555	8772	8952	9581
800S - 43	0.0451	0.0712	33	247	381	401	470	542	730	757	854	150	197	204	228	548	678	698	765
800S - 54	0.0566	0.0849	33	379	576	605	706	839	1110	1150	1290	270	349	361	402	904	1102	1131	1234
800S - 54	0.0566	0.0849	50	575	872	917	1070	1272	1682	1743	1955	409	529	547	608	1370	1670	1714	1869
800S - 68	0.0713	0.1069	33	582	870	912	1061	1297	1686	1744	1944	473	601	619	685	1485	1783	1827	1981
800S - 68	0.0713	0.1069	50	882	1318	1382	1607	1966	2555	2642	2946	716	910	939	1038	2250	2701	2768	3001
800S - 97	0.1017	0.1525	50	1702	2477	2592	2992	3850	4873	5025	5553	1618	2003	2060	2259	4761	5593	5716	6146
800S - 118	0.1242	0.1863	50	2462	3531	3689	4241	5629	7023	7229	7949	2518	3075	3158	3445	7223	8387	8559	9160
1000S - 54	0.0566	0.0849	33	365	554	582	680	826	1092	1132	1269	228	295	305	339	841	1026	1053	1148
1000S - 54	0.0566	0.0849	50	553	840	882	1031	1251	1655	1715	1923	346	447	462	514	1275	1554	1595	1740
1000S - 68	0.0713	0.1069	33	563	842	883	1027	1279	1662	1719	1917	415	527	544	602	1398	1679	1721	1866
1000S - 68	0.0713	0.1069	50	854	1275	1338	1556	1938	2518	2604	2904	629	799	824	912	2119	2544	2607	2827
1000S - 97	0.1017	0.1525	50	1657	2413	2525	2914	3805	4816	4966	5488	1476	1827	1879	2060	4545	5338	5456	5866
1000S - 118	0.1242	0.1863	50	2405	3449	3604	4143	5569	6948	7152	7864	2330	2845	2921	3187	6934	8051	8217	8794
1200S - 68	0.0713	0.1069	33	547	817	857	996	1262	1641	1697	1892	363	462	476	527	1320	1585	1625	1762
1200S - 68	0.0713	0.1069	50	828	1237	1298	1509	1913	2486	2571	2866	551	699	721	798	2001	2402	2462	2669
1200S - 97	0.1017	0.1525	50	1618	2355	2464	2844	3764	4764	4912	5429	1348	1668	1716	1882	4350	5109	5222	5614
1200S - 118	0.1242	0.1863	50	2354	3375	3527	4054	5515	6881	7083	7788	2161	2638	2709	2956	6675	7750	7910	8465
1400S - 68	0.0713	0.1069	33	531	793	832	968	1247	1621	1676	1869	316	401	414	458	1249	1500	1537	1666
1400S - 68	0.0713	0.1069	50	805	1202	1261	1466	1890	2456	2540	2832	479	608	627	694	1892	2272	2329	2525
1400S - 97	0.1017	0.1525	50	1581	2302	2408	2780	3727	4717	4864	5375	1230	1523	1567	1718	4171	4900	5008	5384
1400S - 118	0.1242	0.1863	50	2307	3308	3456	3973	5466	6819	7020	7719	2006	2449	2515	2744	6437	7474	7628	8164
1600S - 97	0.1017	0.1525	50	1547	2252	2357	2721	3692	4673	4818	5325	1121	1388	1428	1566	4005	4705	4809	5170
1600S - 118	0.1242	0.1863	50	2263	3245	3391	3898	5420	6762	6961	7654	1862	2274	2335	2548	6217	7219	7367	7884

1 Bearing length to web height ratio, N/h, exceeds limit of 2.0

2 Bearing length to thickness ratio, N/t, exceeds limit of 210

See Web Crippling Load Table Notes

Allowable Web Crippling Loads (lbs) - Back-to-Back Members

Member	Design Thickness	Inside Radius	Yield Str	Condition 1				Condition 2				Condition 3				Condition 4			
				1	3.5	4	6	1	3.5	4	6	1	3.5	4	6	1	3.5	4	6
162S - 18	0.0188	0.0843	33	124	196 [1]	207 [1,2]	244 [1,2]	156	217 [1]	226 [1,2]	257 [1,2]	76	100 [1]	103 [1,2]	116 [1,2]	153	202 [1]	209 [1,2]	234 [1,2]
162S - 27	0.0283	0.0796	33	268	413 [1]	435 [1]	510 [1,2]	363	489 [1]	507 [1]	572 [1,2]	184	236 [1]	244 [1]	270 [1,2]	386	494 [1]	510 [1]	566 [1,2]
162S - 30	0.0312	0.0781	33	321	493 [1]	518 [1]	606 [1]	443	592 [1]	614 [1]	690 [1]	227	288 [1]	298 [1]	329 [1]	478	608 [1]	628 [1]	695 [1]
162S - 33	0.0346	0.0764	33	389	593 [1]	623 [1]	729 [1]	547	724 [1]	750 [1]	842 [1]	283	357 [1]	368 [1]	406 [1]	600	757 [1]	781 [1]	862 [1]
162S - 43	0.0451	0.0712	33	638	953 [1]	1000 [1]	1163 [1]	933	1211 [1]	1252 [1]	1395 [1]	494	612 [1]	629 [1]	690 [1]	1066	1320 [1]	1358 [1]	1489 [1]
162S - 54	0.0566	0.0849	33	949	1395 [1]	1462 [1]	1692 [1]	1427	1820 [1]	1878 [1]	2081 [1]	784	956 [1]	982 [1]	1071 [1]	1696	2068 [1]	2123 [1]	2315 [1]
162S - 54	0.0566	0.0849	50	1438	2114 [1]	2215 [1]	2564 [1]	2162	2757 [1]	2846 [1]	3153 [1]	1188	1449 [1]	1488 [1]	1622 [1]	2570	3134 [1]	3217 [1]	3508 [1]
162S - 68	0.0713	0.1069	33	1418	2050 [1]	2144 [1]	2470 [1]	2188	2744 [1]	2826 [1]	3113 [1]	1250	1501 [1]	1538 [1]	1667 [1]	2703	3246 [1]	3326 [1]	3606 [1]
162S - 68	0.0713	0.1069	50	2148	3106 [1]	3248 [1]	3742 [1]	3315	4157 [1]	4282 [1]	4717 [1]	1894	2274 [1]	2330 [1]	2526 [1]	4096	4918 [1]	5040 [1]	5464 [1]
250S - 18	0.0188	0.0843	33	123	196 [1]	206 [1,2]	244 [1,2]	156	216 [1]	225 [1,2]	256 [1,2]	65	85 [1]	88 [1,2]	99 [1,2]	131	172 [1]	179 [1,2]	200 [1,2]
250S - 27	0.0283	0.0796	33	267	412 [1]	434 [1]	509 [1,2]	363	488 [1]	506 [1]	571 [1,2]	164	211 [1]	217 [1]	241 [1,2]	344	441 [1]	455 [1]	505 [1,2]
250S - 30	0.0312	0.0781	33	320	492 [1]	517 [1]	605 [1]	443	590 [1]	612 [1]	689 [1]	204	260 [1]	268 [1]	296 [1]	430	547 [1]	564 [1]	625 [1]
250S - 33	0.0346	0.0764	33	389	592 [1]	622 [1]	727 [1]	546	723 [1]	749 [1]	840 [1]	256	323 [1]	333 [1]	368 [1]	544	686 [1]	708 [1]	781 [1]
250S - 43	0.0451	0.0712	33	637	952 [1]	999 [1]	1162 [1]	932	1209 [1]	1250 [1]	1393 [1]	455	563 [1]	580 [1]	636 [1]	982	1216 [1]	1251 [1]	1371 [1]
250S - 54	0.0566	0.0849	33	947	1393 [1]	1460 [1]	1690 [1]	1425	1817 [1]	1876 [1]	2078 [1]	730	890 [1]	914 [1]	997 [1]	1579	1925 [1]	1977 [1]	2155 [1]
250S - 54	0.0566	0.0849	50	1435	2111 [1]	2212 [1]	2560 [1]	2159	2753 [1]	2842 [1]	3149 [1]	1106	1349 [1]	1385 [1]	1510 [1]	2393	2917 [1]	2995 [1]	3266 [1]
250S - 68	0.0713	0.1069	33	1416	2047 [1]	2141 [1]	2467 [1]	2185	2740 [1]	2823 [1]	3109 [1]	1174	1409 [1]	1444 [1]	1566 [1]	2539	3048 [1]	3124 [1]	3387 [1]
250S - 68	0.0713	0.1069	50	2145	3102 [1]	3244 [1]	3737 [1]	3311	4152 [1]	4277 [1]	4711 [1]	1778	2135 [1]	2188 [1]	2373 [1]	3846	4618 [1]	4733 [1]	5132 [1]
350S - 18	0.0188	0.0843	33	123	195 [1]	206 [1,2]	243 [1,2]	156	216 [1]	225 [1,2]	256 [1,2]	55	72 [1]	75 [1,2]	84 [1,2]	110	145 [1]	151 [1,2]	169 [1,2]
350S - 27	0.0283	0.0796	33	267	412 [1]	433 [1]	508 [1,2]	362	487 [1]	505 [1]	570 [1,2]	146	187 [1]	193 [1]	214 [1,2]	306	391 [1]	404 [1]	448 [1,2]
350S - 30	0.0312	0.0781	33	320	491 [1]	516 [1]	604 [1]	442	589 [1]	611 [1]	688 [1]	183	233 [1]	240 [1]	266 [1]	386	490 [1]	506 [1]	560 [1]
350S - 33	0.0346	0.0764	33	388	591 [1]	621 [1]	726 [1]	545	721 [1]	748 [1]	839 [1]	232	292 [1]	301 [1]	333 [1]	492	621 [1]	640 [1]	706 [1]
350S - 43	0.0451	0.0712	33	636	951 [1]	997 [1]	1160 [1]	931	1207 [1]	1248 [1]	1391 [1]	419	519 [1]	534 [1]	585 [1]	904	1119 [1]	1151 [1]	1263 [1]
350S - 54	0.0566	0.0849	33	946	1392 [1]	1458 [1]	1688 [1]	1423	1815 [1]	1873 [1]	2075 [1]	680	829 [1]	852 [1]	929 [1]	1471	1794 [1]	1842 [1]	2008 [1]
350S - 54	0.0566	0.0849	50	1434	2109 [1]	2209 [1]	2557 [1]	2156	2750 [1]	2838 [1]	3144 [1]	1031	1257 [1]	1290 [1]	1407 [1]	2229	2718 [1]	2791 [1]	3043 [1]
350S - 68	0.0713	0.1069	33	1414	2045 [1]	2138 [1]	2464 [1]	2183	2737 [1]	2819 [1]	3106 [1]	1104	1326 [1]	1359 [1]	1473 [1]	2388	2867 [1]	2939 [1]	3186 [1]
350S - 68	0.0713	0.1069	50	2143	3098 [1]	3240 [1]	3733 [1]	3307	4147 [1]	4272 [1]	4706 [1]	1673	2009 [1]	2059 [1]	2232 [1]	3618	4345 [1]	4452 [1]	4827 [1]
350S - 97	0.1017	0.1525	33	2641	3716 [1]	3876 [1]	4431 [1]	4235	5181 [1]	5321 [1]	5809 [1]	2305	2708 [1]	2768 [1]	2976 [1]	4986	5857 [1]	5986 [1]	6435 [1]
350S - 97	0.1017	0.1525	50	4002	5631 [1]	5873 [1]	6713 [1]	6416	7850 [1]	8062 [1]	8802 [1]	3493	4103 [1]	4194 [1]	4508 [1]	7555	8874 [1]	9070 [1]	9751 [1]
362S - 18	0.0188	0.0843	33	123	195 [1]	206 [1,2]	243 [1,2]	155	216 [1]	225 [1,2]	256 [1,2]	53	70 [1]	73 [1,2]	82 [1,2]	108	142 [1]	147 [1,2]	165 [1,2]
362S - 27	0.0283	0.0796	33	266	411 [1]	433 [1]	508 [1,2]	362	487 [1]	505 [1]	570 [1,2]	144	184 [1]	190 [1]	211 [1,2]	301	386 [1]	398 [1]	442 [1,2]
362S - 30	0.0312	0.0781	33	320	491 [1]	516 [1]	604 [1]	442	589 [1]	611 [1]	687 [1]	181	230 [1]	237 [1]	262 [1]	381	484 [1]	499 [1]	553 [1]
362S - 33	0.0346	0.0764	33	388	591 [1]	621 [1]	726 [1]	545	721 [1]	747 [1]	839 [1]	229	289 [1]	298 [1]	329 [1]	486	613 [1]	632 [1]	698 [1]
362S - 43	0.0451	0.0712	33	636	950 [1]	997 [1]	1160 [1]	930	1207 [1]	1248 [1]	1391 [1]	415	514 [1]	528 [1]	579 [1]	895	1109 [1]	1140 [1]	1250 [1]
362S - 54	0.0566	0.0849	33	946	1391 [1]	1458 [1]	1687 [1]	1423	1815 [1]	1873 [1]	2075 [1]	675	823 [1]	845 [1]	921 [1]	1459	1779 [1]	1826 [1]	1992 [1]
362S - 54	0.0566	0.0849	50	1433	2108 [1]	2208 [1]	2557 [1]	2156	2750 [1]	2838 [1]	3144 [1]	1022	1246 [1]	1280 [1]	1395 [1]	2211	2695 [1]	2767 [1]	3017 [1]
362S - 68	0.0713	0.1069	33	1414	2045 [1]	2138 [1]	2463 [1]	2182	2737 [1]	2819 [1]	3105 [1]	1096	1316 [1]	1349 [1]	1463 [1]	2371	2847 [1]	2918 [1]	3163 [1]
362S - 68	0.0713	0.1069	50	2143	3098 [1]	3239 [1]	3732 [1]	3307	4147 [1]	4271 [1]	4705 [1]	1661	1995 [1]	2044 [1]	2216 [1]	3592	4314 [1]	4421 [1]	4793 [1]
362S - 97	0.1017	0.1525	33	2641	3716 [1]	3875 [1]	4430 [1]	4234	5180 [1]	5320 [1]	5809 [1]	2292	2693 [1]	2752 [1]	2959 [1]	4957	5823 [1]	5952 [1]	6399 [1]
362S - 97	0.1017	0.1525	50	4001	5630 [1]	5872 [1]	6713 [1]	6416	7849 [1]	8061 [1]	8801 [1]	3473	4080 [1]	4170 [1]	4483 [1]	7511	8823 [1]	9018 [1]	9695 [1]
400S - 27	0.0283	0.0796	33	266	411	433 [1]	507 [1,2]	362	486	505 [1]	569 [1,2]	138	177	182 [1]	202 [1,2]	289	370	382 [1]	424 [1,2]
400S - 30	0.0312	0.0781	33	320	490	516 [1]	604 [1]	441	589	611 [1]	687 [1]	174	221	228 [1]	252 [1]	366	465	480 [1]	531 [1]
400S - 33	0.0346	0.0764	33	388	591	621 [1]	726 [1]	545	721	747 [1]	838 [1]	221	279	287 [1]	317 [1]	469	592	610 [1]	673 [1]
400S - 43	0.0451	0.0712	33	635	950	997 [1]	1159 [1]	930	1206	1247 [1]	1390 [1]	403	499	513 [1]	563 [1]	870	1077	1108 [1]	1215 [1]
400S - 54	0.0566	0.0849	33	946	1391	1457 [1]	1687 [1]	1422	1814	1872 [1]	2074 [1]	658	803	824 [1]	899 [1]	1424	1736	1782 [1]	1943 [1]
400S - 54	0.0566	0.0849	50	1433	2107	2207 [1]	2556 [1]	2155	2748	2836 [1]	3143 [1]	998	1216	1249 [1]	1361 [1]	2157	2630	2700 [1]	2944 [1]
400S - 68	0.0713	0.1069	33	1414	2044	2137 [1]	2462 [1]	2181	2736	2818 [1]	3104 [1]	1074	1289	1321 [1]	1432 [1]	2322	2788	2857 [1]	3098 [1]
400S - 68	0.0713	0.1069	50	2142	3097	3238 [1]	3731 [1]	3305	4145	4270 [1]	4703 [1]	1627	1953	2002 [1]	2170 [1]	3518	4224	4329 [1]	4694 [1]
400S - 97	0.1017	0.1525	33	2640	3715	3874 [1]	4429 [1]	4233	5178	5319 [1]	5807 [1]	2254	2648	2706 [1]	2909 [1]	4875	5726	5853 [1]	6292 [1]
400S - 97	0.1017	0.1525	50	4000	5628	5870 [1]	6711 [1]	6414	7846	8059 [1]	8798 [1]	3415	4012	4100 [1]	4408 [1]	7386	8676	8868 [1]	9534 [1]
550S - 27	0.0283	0.0796	33	266	410	432	506 [1,2]	361	485	504	568 [1,2]	116	149	154	171 [1,2]	244	312	322	357 [1,2]
550S - 30	0.0312	0.0781	33	319	489	515	603 [1]	441	588	610	686 [1]	149	189	195	216 [1]	314	399	411	455 [1]
550S - 33	0.0346	0.0764	33	387	590	620	724 [1]	544	720	746	836 [1]	192	242	250	276 [1]	408	514	530	585 [1]
550S - 43	0.0451	0.0712	33	634	948	995	1157 [1]	928	1204	1245	1388 [1]	361	447	459	504 [1]	778	964	991	1087 [1]
550S - 54	0.0566	0.0849	33	944	1389	1455	1684 [1]	1420	1811	1869	2071 [1]	600	732	751	819 [1]	1298	1582	1624	1771 [1]
550S - 54	0.0566	0.0849	50	1431	2104	2204	2552 [1]	2152	2744	2832	3138 [1]	909	1108	1138	1241 [1]	1966	2397	2461	2683 [1]

1 Bearing length to web height ratio, N/h, exceeds limit of 2.0

2 Bearing length to thickness ratio, N/t, exceeds limit of 210

See Web Crippling Load Table Notes

Allowable Web Crippling Loads (lbs) - Back-to-Back Members

Member	Design Thickness	Inside Radius	Yield Str	Condition 1				Condition 2				Condition 3				Condition 4			
				1	3.5	4	6	1	3.5	4	6	1	3.5	4	6	1	3.5	4	6
550S - 68	0.0713	0.1069	33	1412	2041	2134	2459 [1]	2179	2732	2814	3100 [1]	993	1192	1222	1324 [1]	2147	2578	2642	2864 [1]
550S - 68	0.0713	0.1069	50	2139	3092	3234	3726 [1]	3301	4139	4264	4697 [1]	1504	1806	1851	2007 [1]	3253	3906	4003	4340 [1]
550S - 97	0.1017	0.1525	33	2637	3710	3870	4424 [1]	4228	5172	5313	5800 [1]	2119	2489	2544	2735 [1]	4583	5383	5502	5915 [1]
550S - 97	0.1017	0.1525	50	3995	5622	5863	6703 [1]	6406	7837	8049	8788 [1]	3211	3771	3855	4144 [1]	6944	8157	8337	8963 [1]
600S - 30	0.0312	0.0781	33	319	489	514	602 [1]	440	587	609	685 [1]	141	180	185	205 [1]	298	379	391	433 [1]
600S - 33	0.0346	0.0764	33	387	589	619	724 [1]	543	719	745	836 [1]	183	231	238	263 [1]	389	491	506	559 [1]
600S - 43	0.0451	0.0712	33	634	948	995	1157 [1]	928	1204	1245	1387 [1]	348	431	443	486 [1]	751	930	956	1048 [1]
600S - 54	0.0566	0.0849	33	944	1388	1454	1683 [1]	1420	1810	1868	2070 [1]	583	710	729	795 [1]	1260	1536	1577	1719 [1]
600S - 54	0.0566	0.0849	50	1430	2103	2203	2551 [1]	2151	2743	2831	3136 [1]	883	1076	1105	1205 [1]	1909	2327	2389	2605 [1]
600S - 68	0.0713	0.1069	33	1411	2040	2133	2458 [1]	2178	2731	2813	3099 [1]	968	1163	1192	1292 [1]	2095	2515	2577	2794 [1]
600S - 68	0.0713	0.1069	50	2138	3091	3233	3724 [1]	3299	4138	4262	4695 [1]	1467	1762	1806	1958 [1]	3174	3811	3905	4234 [1]
600S - 97	0.1017	0.1525	50	3994	5620	5861	6701 [1]	6404	7834	8046	8785 [1]	3150	3700	3781	4065 [1]	6812	8002	8178	8792 [1]
600S - 118	0.1242	0.1863	50	5696	7892	8218	9351 [1]	9325	11257	11543	12540 [1]	4808	5583	5698	6097 [1]	10398	12074	12322	13187 [1]
800S - 43	0.0451	0.0712	33	633	946	993	1154	926	1202	1242	1384	302	374	384	421	651	806	829	909
800S - 54	0.0566	0.0849	33	942	1386	1452	1681	1417	1807	1865	2067	519	633	650	709	1123	1369	1405	1532
800S - 54	0.0566	0.0849	50	1428	2100	2200	2546	2147	2738	2826	3131	787	959	985	1074	1701	2074	2129	2322
800S - 68	0.0713	0.1069	33	1409	2037	2130	2455	2174	2727	2809	3094	881	1058	1084	1175	1905	2287	2344	2542
800S - 68	0.0713	0.1069	50	2135	3087	3228	3719	3295	4132	4256	4688	1335	1602	1642	1781	2886	3466	3552	3851
800S - 97	0.1017	0.1525	50	3989	5613	5854	6692	6396	7825	8036	8774	2929	3441	3517	3781	6335	7442	7606	8177
800S - 118	0.1242	0.1863	50	5690	7883	8209	9341	9314	11244	11530	12526	4514	5241	5349	5724	9762	11335	11568	12380
1000S - 54	0.0566	0.0849	33	941	1384	1450	1678	1415	1805	1863	2064	464	565	580	633	1003	1222	1255	1368
1000S - 54	0.0566	0.0849	50	1426	2097	2196	2543	2144	2735	2822	3127	702	856	879	959	1519	1852	1901	2073
1000S - 68	0.0713	0.1069	33	1407	2035	2128	2451	2172	2723	2805	3090	804	965	989	1073	1739	2088	2140	2320
1000S - 68	0.0713	0.1069	50	2132	3083	3224	3714	3290	4126	4250	4682	1218	1463	1499	1625	2635	3164	3242	3515
1000S - 97	0.1017	0.1525	50	3985	5607	5848	6685	6389	7816	8028	8764	2737	3215	3286	3533	5920	6953	7107	7640
1000S - 118	0.1242	0.1863	50	5684	7875	8200	9332	9305	11233	11519	12514	4257	4943	5045	5399	9208	10691	10911	11677
1200S - 68	0.0713	0.1069	33	1406	2032	2125	2449	2169	2720	2802	3086	735	883	904	981	1590	1909	1956	2121
1200S - 68	0.0713	0.1069	50	2130	3079	3220	3710	3287	4122	4245	4676	1114	1337	1370	1486	2408	2892	2964	3213
1200S - 97	0.1017	0.1525	50	3981	5601	5842	6678	6383	7808	8020	8756	2564	3012	3078	3309	5545	6514	6658	7158
1200S - 118	0.1242	0.1863	50	5679	7868	8193	9323	9297	11223	11508	12503	4027	4676	4772	5107	8710	10113	10321	11046
1400S - 68	0.0713	0.1069	33	1404	2030	2123	2446	2167	2717	2799	3083	672	806	826	896	1452	1744	1787	1938
1400S - 68	0.0713	0.1069	50	2127	3076	3216	3706	3283	4117	4241	4671	1018	1222	1252	1358	2201	2642	2708	2936
1400S - 97	0.1017	0.1525	50	3977	5596	5837	6672	6377	7801	8013	8748	2406	2826	2888	3105	5203	6111	6246	6715
1400S - 118	0.1242	0.1863	50	5674	7862	8186	9316	9289	11214	11499	12492	3817	4432	4523	4840	8254	9584	9781	10468
1600S - 97	0.1017	0.1525	50	3974	5592	5832	6667	6372	7795	8006	8741	2259	2653	2712	2915	4885	5738	5864	6305
1600S - 118	0.1242	0.1863	50	5670	7856	8180	9309	9282	11205	11490	12483	3621	4205	4291	4592	7832	9093	9281	9932

1 Bearing length to web height ratio, N/h, exceeds limit of 2.0

2 Bearing length to thickness ratio, N/t, exceeds limit of 210

See Web Crippling Load Table Notes

Channel Properties

U-Channel Section Properties

Section	Design Thickness (in)	Yield Strength, Fy (ksi)	Area (in^2)	Weight (lb/ft)	Ix (in^4)	Rx (in)	Iy (in^4)	Ry (in)	Ix (in^4)	Sx (in^3)	Ma (in-k)	Va (lb)
075U050-54	0.0566	33	0.087	0.296	0.007	0.289	0.002	0.156	0.007	0.019	0.459	327
150U050-54	0.0566	33	0.130	0.441	0.039	0.549	0.003	0.146	0.039	0.052	1.230	852
200U050-54	0.0566	33	0.158	0.537	0.080	0.711	0.003	0.137	0.080	0.080	1.883	1203
250U050-54	0.0566	33	0.186	0.633	0.140	0.868	0.003	0.130	0.140	0.112	2.648	1553

1 Calculated properties are based on AISI S100-16/S2-20, *North American Specification for Design of Cold-Formed Steel Structural Members*.
2 Minimum base metal thickness is 95% of design thickness.
3 Effective properties are based on Fy=33ksi.

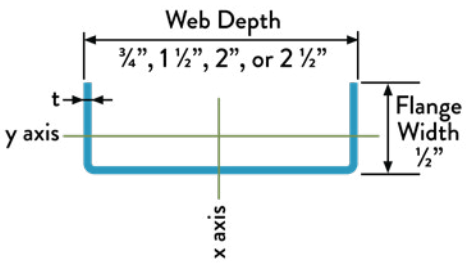

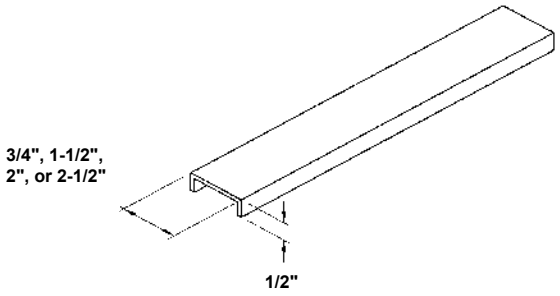

U-Channel Allowable Ceiling Spans L/360

Section	Spans	4 psf Channel Spacing (in) o.c.					6 psf Channel Spacing (in) o.c.					13 psf Channel Spacing (in) o.c.					15 psf Channel Spacing (in) o.c.				
		24	36	48	60	72	24	36	48	60	72	24	36	48	60	72	24	36	48	60	72
075U050-54	Single	3' 5"	3' 0"	2' 9"	2' 6"	2' 4"	3' 0"	2' 7"	2' 4"	2' 2"	2' 1"	2' 4"	2' 0"	1' 10"	1' 8"	1' 7"	2' 2"	1' 11"	1' 9"	1' 7"	1' 6"
	Multiple	4' 2"	3' 8"	3' 4"	3' 1"	2' 11"	3' 8"	3' 2"	2' 11"	2' 8"	2' 7"	2' 10"	2' 6"	2' 3"	2' 1"	1' 11"	2' 8"	2' 4"	2' 2"	2' 0"	1' 9"
150U050-54	Single	5' 6"	4' 10"	4' 5"	4' 1"	3' 10"	4' 10"	4' 3"	3' 10"	3' 7"	3' 5"	3' 9"	3' 4"	3' 0"	2' 9"	2' 7"	3' 7"	3' 2"	2' 10"	2' 7"	2' 5"
	Multiple	7' 1"	6' 2"	5' 8"	5' 3"	4' 11"	6' 2"	5' 5"	4' 11"	4' 7"	4' 4"	4' 10"	4' 2"	3' 9"	3' 4"	3' 0"	4' 7"	4' 0"	3' 6"	3' 1"	2' 9"
200U050-54	Single	5' 10"	5' 1"	4' 8"	4' 4"	4' 1"	5' 1"	4' 6"	4' 1"	3' 10"	3' 7"	4' 0"	3' 6"	3' 2"	3' 0"	2' 10"	3' 10"	3' 4"	3' 1"	2' 10"	2' 8"
	Multiple	7' 5"	6' 6"	5' 11"	5' 6"	5' 2"	6' 6"	5' 8"	5' 2"	4' 10"	4' 7"	5' 1"	4' 5"	4' 0"	3' 9"	3' 6"	4' 10"	4' 3"	3' 10"	3' 7"	3' 2"
250U050-54	Single	6' 1"	5' 4"	4' 10"	4' 6"	4' 3"	5' 4"	4' 8"	4' 3"	4' 0"	3' 9"	4' 2"	3' 8"	3' 4"	3' 1"	2' 11"	4' 0"	3' 6"	3' 2"	3' 0"	2' 10"
	Multiple	7' 9"	6' 9"	6' 2"	5' 9"	5' 5"	6' 9"	5' 11"	5' 5"	5' 0"	4' 9"	5' 3"	4' 7"	4' 3"	3' 11"	3' 9"	5' 0"	4' 5"	4' 0"	3' 9"	3' 7"

U-Channel Allowable Ceiling Spans L/240

Section	Spans	4 psf Channel Spacing (in) o.c.					6 psf Channel Spacing (in) o.c.					13 psf Channel Spacing (in) o.c.					15 psf Channel Spacing (in) o.c.				
		24	36	48	60	72	24	36	48	60	72	24	36	48	60	72	24	36	48	60	72
075U050-54	Single	3' 11"	3' 5"	3' 1"	2' 11"	2' 9"	3' 5"	3' 0"	2' 9"	2' 6"	2' 4"	2' 8"	2' 4"	2' 1"	1' 11"	1' 9"	2' 6"	2' 2"	2' 0"	1' 10"	1' 8"
	Multiple	4' 10"	4' 2"	3' 10"	3' 7"	3' 4"	4' 2"	3' 8"	3' 4"	3' 1"	2' 10"	3' 3"	2' 9"	2' 4"	2' 1"	1' 11"	3' 1"	2' 7"	2' 2"	2' 0"	1' 9"
150U050-54	Single	5' 6"	4' 10"	4' 5"	4' 1"	3' 10"	4' 10"	4' 3"	3' 10"	3' 7"	3' 5"	3' 9"	3' 4"	3' 0"	2' 9"	2' 7"	3' 7"	3' 2"	2' 10"	2' 7"	2' 5"
	Multiple	7' 1"	6' 2"	5' 8"	5' 3"	4' 11"	6' 2"	5' 5"	4' 11"	4' 7"	4' 4"	4' 10"	4' 2"	3' 9"	3' 4"	3' 0"	4' 7"	4' 0"	3' 6"	3' 1"	2' 9"
200U050-54	Single	5' 10"	5' 1"	4' 8"	4' 4"	4' 1"	5' 1"	4' 6"	4' 1"	3' 10"	3' 7"	4' 0"	3' 6"	3' 2"	3' 0"	2' 10"	3' 10"	3' 4"	3' 1"	2' 10"	2' 8"
	Multiple	7' 5"	6' 6"	5' 11"	5' 6"	5' 2"	6' 6"	5' 8"	5' 2"	4' 10"	4' 7"	5' 1"	4' 5"	4' 0"	3' 9"	3' 6"	4' 10"	4' 3"	3' 10"	3' 7"	3' 2"
250U050-54	Single	6' 1"	5' 4"	4' 10"	4' 6"	4' 3"	5' 4"	4' 8"	4' 3"	4' 0"	3' 9"	4' 2"	3' 8"	3' 4"	3' 1"	2' 11"	4' 0"	3' 6"	3' 2"	3' 0"	2' 10"
	Multiple	7' 9"	6' 9"	6' 2"	5' 9"	5' 5"	6' 9"	5' 11"	5' 5"	5' 0"	4' 9"	5' 3"	4' 7"	4' 3"	3' 11"	3' 9"	5' 0"	4' 5"	4' 0"	3' 9"	3' 7"

1 Allowable ceiling spans are based on effective properties.
2 Multiple span indicates two or more equal spans with channel continuous over center support.
3 Bearing length = 0.75-inches.
4 Table values are based on the compression flange laterally unsupported.

U-Channel Allowable Ceiling Spans L/120

Section	Spans	4 psf Channel Spacing (in) o.c.					6 psf Channel Spacing (in) o.c.					13 psf Channel Spacing (in) o.c.					15 psf Channel Spacing (in) o.c.				
		24	36	48	60	72	24	36	48	60	72	24	36	48	60	72	24	36	48	60	72
075U050-54	Single	4' 10"	4' 1"	3' 7"	3' 3"	3' 0"	4' 1"	3' 5"	3' 0"	2' 9"	2' 6"	2' 11"	2' 5"	2' 2"	1' 11"	1' 9"	2' 9"	2' 4"	2' 0"	1' 10"	1' 8"
	Multiple	5' 5"	4' 6"	4' 2"	3' 10"	3' 5"	4' 6"	3' 11"	3' 5"	3' 2"	2' 11"	3' 5"	2' 9"	2' 4"	2' 1"	1' 11"	3' 1"	2' 7"	2' 2"	2' 0"	1' 9"
150U050-54	Single	5' 6"	4' 10"	4' 5"	4' 1"	3' 10"	4' 10"	4' 3"	3' 10"	3' 7"	3' 5"	3' 9"	3' 4"	3' 0"	2' 9"	2' 7"	3' 7"	3' 2"	2' 10"	2' 7"	2' 5"
	Multiple	7' 1"	6' 2"	5' 8"	5' 3"	4' 11"	6' 2"	5' 5"	4' 11"	4' 7"	4' 4"	4' 10"	4' 2"	3' 9"	3' 4"	3' 0"	4' 7"	4' 0"	3' 6"	3' 1"	2' 9"
200U050-54	Single	5' 10"	5' 1"	4' 8"	4' 4"	4' 1"	5' 1"	4' 6"	4' 1"	3' 10"	3' 7"	4' 0"	3' 6"	3' 2"	3' 0"	2' 10"	3' 10"	3' 4"	3' 1"	2' 10"	2' 8"
	Multiple	7' 5"	6' 6"	5' 11"	5' 6"	5' 2"	6' 6"	5' 8"	5' 2"	4' 10"	4' 7"	5' 1"	4' 5"	4' 0"	3' 9"	3' 6"	4' 10"	4' 3"	3' 10"	3' 7"	3' 2"
250U050-54	Single	6' 1"	5' 4"	4' 10"	4' 6"	4' 3"	5' 4"	4' 8"	4' 3"	4' 0"	3' 9"	4' 2"	3' 8"	3' 4"	3' 1"	2' 11"	4' 0"	3' 6"	3' 2"	3' 0"	2' 10"
	Multiple	7' 9"	6' 9"	6' 2"	5' 9"	5' 5"	6' 9"	5' 11"	5' 5"	5' 0"	4' 9"	5' 3"	4' 7"	4' 3"	3' 11"	3' 9"	5' 0"	4' 5"	4' 0"	3' 9"	3' 7"

1 Allowable ceiling spans are based on effective properties.
2 Multiple span indicates two or more equal spans with channel continuous over center support.
3 Bearing length = 0.75-inches.
4 Table values are based on the compression flange laterally unsupported.



(Hat) Furring (F) Channel Section Properties

Section	Design Thickness (in)	Yield Strength, Fy (ksi)	Area (in^2)	Weight (lb/ft)	Ix (in^4)	Rx (in)	Iy (in^4)	Ry (in)	Ix (in^4)	Sx (in^3)	Ma (ft-lb)	Va (lb)
087F125-18	0.0188	33	0.072	0.244	0.009	0.354	0.035	0.698	0.008	0.016	26.61	255
087F125-27	0.0283	33	0.107	0.365	0.013	0.351	0.051	0.693	0.013	0.027	45.20	381
087F125-30	0.0312	33	0.118	0.401	0.014	0.350	0.056	0.691	0.014	0.031	50.98	420
087F125-33	0.0346	33	0.130	0.443	0.016	0.349	0.062	0.689	0.016	0.034	56.23	464
087F125-43	0.0451	33	0.168	0.572	0.020	0.345	0.079	0.684	0.020	0.043	71.00	599
150F125-18	0.0188	33	0.095	0.324	0.031	0.572	0.052	0.742	0.029	0.034	56.73	261
150F125-27	0.0283	33	0.143	0.485	0.046	0.569	0.077	0.737	0.046	0.057	94.22	390
150F125-30	0.0312	33	0.157	0.534	0.051	0.568	0.085	0.735	0.050	0.064	105.92	429
150F125-33	0.0346	33	0.174	0.590	0.056	0.566	0.093	0.733	0.056	0.071	117.31	474
150F125-43	0.0451	33	0.225	0.764	0.071	0.563	0.119	0.728	0.071	0.091	149.70	613

1 Calculated properties are based on AISI S100-16/S2-20, *North American Specification for Design of Cold-Formed Steel Structural Members*.

2 Minimum base metal thickness is 95% of design thickness. Design thickness used for determination of properties.

3 Effective properties are based on Fy=33ksi. For deflection calculations, use effective Ix. Effective Ix is based on Procedure 1 of NASPEC.

4 Effective properties are given as the minimum value for positive or negative bending.

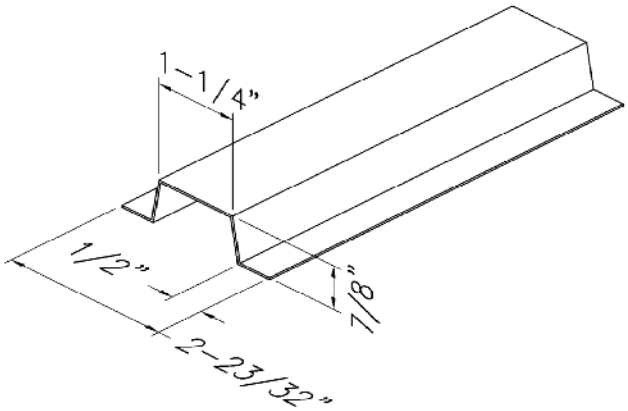

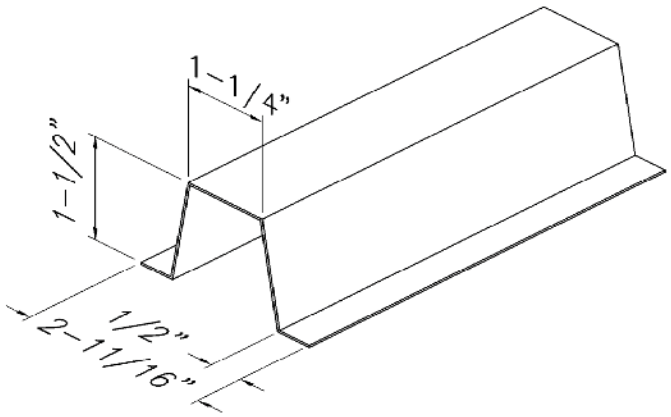

(Hat) Furring (F) Channel Allowable Ceiling Spans L/360

Section	Yield Strength, Fy (ksi)	Spans	4 psf Channel Spacing (in) o.c.			6 psf Channel Spacing (in) o.c.			13 psf Channel Spacing (in) o.c.		
			12	16	24	12	16	24	12	16	24
087F125-18	33	Single	4' 5''	4' 0''	3' 6''	3' 10''	3' 6''	3' 1''	3' 0''	2' 9''	2' 5''
		Multiple	5' 6''	5' 0''	4' 4''	4' 9''	4' 4''	3' 10''	3' 8''	3' 4''	2' 10''
087F125-27	33	Single	5' 3''	4' 9''	4' 2''	4' 7''	4' 2''	3' 8''	3' 6''	3' 3''	2' 10''
		Multiple	6' 6''	5' 11''	5' 2''	5' 8''	5' 2''	4' 6''	4' 4''	4' 0''	3' 6''
087F125-30	33	Single	5' 5''	4' 11''	4' 3''	4' 9''	4' 3''	3' 9''	3' 8''	3' 4''	2' 11''
		Multiple	6' 8''	6' 1''	5' 3''	5' 10''	5' 3''	4' 7''	4' 6''	4' 1''	3' 7''
087F125-33	33	Single	5' 7''	5' 1''	4' 5''	4' 10''	4' 5''	3' 10''	3' 9''	3' 5''	3' 0''
		Multiple	6' 11''	6' 3''	5' 6''	6' 0''	5' 6''	4' 9''	4' 8''	4' 3''	3' 8''
087F125-43	33	Single	6' 0''	5' 6''	4' 9''	5' 3''	4' 9''	4' 2''	4' 1''	3' 8''	3' 3''
		Multiple	7' 5''	6' 9''	5' 11''	6' 6''	5' 11''	5' 2''	5' 0''	4' 7''	4' 0''
150F125-18	33	Single	6' 10''	6' 2''	5' 5''	5' 11''	5' 5''	4' 9''	4' 7''	4' 2''	3' 8''
		Multiple	8' 5''	7' 8''	6' 8''	7' 4''	6' 8''	5' 10''	5' 8''	4' 9''	3' 8''
150F125-27	33	Single	7' 11''	7' 3''	6' 4''	6' 11''	6' 4''	5' 6''	5' 4''	4' 11''	4' 3''
		Multiple	9' 10''	8' 11''	7' 10''	8' 7''	7' 10''	6' 10''	6' 8''	6' 0''	5' 3''
150F125-30	33	Single	8' 2''	7' 5''	6' 6''	7' 2''	6' 6''	5' 8''	5' 6''	5' 0''	4' 5''
		Multiple	10' 1''	9' 2''	8' 0''	8' 10''	8' 0''	7' 0''	6' 10''	6' 3''	5' 5''
150F125-33	33	Single	8' 6''	7' 8''	6' 9''	7' 5''	6' 9''	5' 10''	5' 9''	5' 2''	4' 6''
		Multiple	10' 6''	9' 6''	8' 4''	9' 2''	8' 4''	7' 3''	7' 1''	6' 5''	5' 7''
150F125-43	33	Single	9' 2''	8' 4''	7' 4''	8' 0''	7' 4''	6' 4''	6' 2''	5' 8''	4' 11''
		Multiple	11' 4''	10' 4''	9' 0''	9' 11''	9' 0''	7' 11''	7' 8''	7' 0''	6' 1''

1 Allowable ceiling spans are based on effective properties.

2 Multiple span indicates two or more equal spans with channel continuous over center support.

3 Bearing length = 0.75-inches.

(Hat) Furring (F) Channel Allowable Ceiling Spans L/260

Section	Yield Strength, Fy (ksi)	Spans	4 psf Channel Spacing (in) o.c.			6 psf Channel Spacing (in) o.c.			13 psf Channel Spacing (in) o.c.		
			12	16	24	12	16	24	12	16	24
087F125-18	33	Single	5' 1''	4' 7''	4' 0''	4' 5''	4' 0''	3' 6''	3' 5''	3' 1''	2' 9''
		Multiple	6' 3''	5' 8''	5' 0''	5' 6''	5' 0''	4' 3''	4' 1''	3' 6''	2' 10''
087F125-27	33	Single	6' 0''	5' 5''	4' 9''	5' 3''	4' 9''	4' 2''	4' 1''	3' 8''	3' 3''
		Multiple	7' 5''	6' 9''	5' 11''	6' 6''	5' 11''	5' 2''	5' 0''	4' 7''	3' 9''
087F125-30	33	Single	6' 2''	5' 7''	4' 11''	5' 5''	4' 11''	4' 3''	4' 2''	3' 9''	3' 4''
		Multiple	7' 8''	6' 11''	6' 1''	6' 8''	6' 1''	5' 3''	5' 2''	4' 8''	4' 0''
087F125-33	33	Single	6' 5''	5' 10''	5' 1''	5' 7''	5' 1''	4' 5''	4' 4''	3' 11''	3' 5''
		Multiple	7' 11''	7' 2''	6' 3''	6' 11''	6' 3''	5' 6''	5' 4''	4' 10''	4' 2''
087F125-43	33	Single	6' 11''	6' 3''	5' 6''	6' 0''	5' 6''	4' 9''	4' 8''	4' 3''	3' 8''
		Multiple	8' 6''	7' 9''	6' 9''	7' 5''	6' 9''	5' 11''	5' 9''	5' 3''	4' 7''
150F125-18	33	Single	7' 10''	7' 1''	6' 2''	6' 10''	6' 2''	5' 5''	5' 3''	4' 9''	4' 2''
		Multiple	9' 8''	8' 9''	7' 6''	8' 5''	7' 6''	6' 2''	5' 10''	4' 9''	3' 8''
150F125-27	33	Single	9' 1''	8' 3''	7' 3''	7' 11''	7' 3''	6' 4''	6' 2''	5' 7''	4' 11''
		Multiple	11' 3''	10' 3''	8' 11''	9' 10''	8' 11''	7' 10''	7' 7''	6' 7''	5' 5''
150F125-30	33	Single	9' 5''	8' 6''	7' 5''	8' 2''	7' 5''	6' 6''	6' 4''	5' 9''	5' 0''
		Multiple	11' 7''	10' 6''	9' 2''	10' 1''	9' 2''	8' 0''	7' 10''	7' 0''	5' 9''
150F125-33	33	Single	9' 8''	8' 10''	7' 8''	8' 6''	7' 8''	6' 9''	6' 7''	5' 11''	5' 2''
		Multiple	12' 0''	10' 11''	9' 6''	10' 6''	9' 6''	8' 4''	8' 1''	7' 4''	6' 0''
150F125-43	33	Single	10' 6''	9' 7''	8' 4''	9' 2''	8' 4''	7' 4''	7' 1''	6' 5''	5' 8''
		Multiple	13' 0''	11' 10''	10' 4''	11' 4''	10' 4''	9' 0''	8' 9''	8' 0''	6' 9''

(Hat) Furring (F) Channel Allowable Ceiling Spans L/120

Section	Yield Strength, Fy (ksi)	Spans	4 psf Channel Spacing (in) o.c.			6 psf Channel Spacing (in) o.c.			13 psf Channel Spacing (in) o.c.		
			12	16	24	12	16	24	12	16	24
087F125-18	33	Single	6' 5''	5' 10''	5' 1''	5' 7''	5' 1''	4' 5''	4' 4''	3' 11''	3' 5''
		Multiple	7' 4''	6' 4''	5' 1''	5' 11''	5' 2''	4' 2''	4' 1''	3' 6''	2' 10''
087F125-27	33	Single	7' 7''	6' 10''	6' 0''	6' 7''	6' 0''	5' 3''	5' 1''	4' 8''	4' 1''
		Multiple	9' 4''	8' 3''	6' 8''	7' 9''	6' 9''	5' 5''	5' 3''	4' 7''	3' 8''
087F125-30	33	Single	7' 9''	7' 1''	6' 2''	6' 10''	6' 2''	5' 5''	5' 3''	4' 9''	4' 2''
		Multiple	9' 7''	8' 9''	7' 1''	8' 3''	7' 2''	5' 9''	5' 7''	4' 10''	3' 11''
087F125-33	33	Single	8' 0''	7' 4''	6' 5''	7' 0''	6' 5''	5' 7''	5' 5''	4' 11''	4' 4''
		Multiple	9' 11''	9' 0''	7' 5''	8' 8''	7' 6''	6' 1''	5' 11''	5' 1''	4' 1''
087F125-43	33	Single	8' 8''	7' 11''	6' 11''	7' 7''	6' 11''	6' 0''	5' 10''	5' 4''	4' 8''
		Multiple	10' 9''	9' 9''	8' 5''	9' 5''	8' 5''	6' 10''	6' 7''	5' 9''	4' 8''
150F125-18	33	Single	9' 10''	8' 11''	7' 10''	8' 7''	7' 10''	6' 10''	6' 8''	6' 0''	5' 3''
		Multiple	10' 8''	9' 3''	7' 6''	8' 8''	7' 6''	6' 1''	5' 10''	4' 5''	2' 11''
150F125-27	33	Single	11' 6''	10' 5''	9' 1''	10' 0''	9' 1''	7' 11''	7' 9''	7' 0''	6' 2''
		Multiple	13' 9''	11' 11''	9' 8''	11' 2''	9' 8''	7' 11''	7' 7''	6' 7''	5' 4''
150F125-30	33	Single	11' 10''	10' 9''	9' 5''	10' 4''	9' 5''	8' 2''	8' 0''	7' 3''	6' 4''
		Multiple	14' 7''	12' 7''	10' 3''	11' 11''	10' 3''	8' 4''	8' 1''	7' 0''	5' 8''
150F125-33	33	Single	12' 3''	11' 1''	9' 8''	10' 8''	9' 8''	8' 6''	8' 3''	7' 6''	6' 7''
		Multiple	15' 1''	13' 3''	10' 9''	12' 6''	10' 10''	8' 10''	8' 6''	7' 4''	6' 0''
150F125-43	33	Single	13' 3''	12' 1''	10' 6''	11' 7''	10' 6''	9' 2''	8' 11''	8' 2''	7' 1''
		Multiple	16' 5''	14' 11''	12' 2''	14' 2''	12' 3''	9' 11''	9' 7''	8' 4''	6' 9''

1 Single spans taken as the minimum span based on moment, shear, web crippling or deflection.

2 Multiple span indicates two or more equal, continuous spans with span length measured support to support.

3 Multiple spans taken as minimum span based on moment, shear, web crippling, deflection combined bending and shear or combined bending and web crippling.

4 Web crippling values based on 1-inch bearing at end and interior supports.

Fasteners (Screws and Welds)

Screw Table Notes

1. Allowable screw connection capacities are based on Section J4 of AISI S100-16 (2020) w/S2-20, herein referred to as AISI S100.
2. Screw capacities are based on Allowable Stress Design (ASD) and include safety factor of Ω = 3.0.
3. Screw shear (Pnvs), screw tension (Pnts) determined from the mean values from CFSEI Tech note (F701-23) . Table not valid for screw with lower Pnts or Pnvs capacities than listed.
4. The nominal diameter and head diameter based on CFSEI Tech note (F701-23) . Table not valid for screws with smaller diameters.
5. Tabulated values assume two sheets of equal thickness are connected. When connecting materials of different thicknesses or tensile strength, use the lower capacity of the two materials.
6. Allowable shear strength is based on the lesser of the shear strength of the sheet (Pnv/Ω) and of the screw (Pnvs/Ω). Refer to Section J4.3 of AISI S100.
7. Allowable pull-out strength is based on the lesser of the pull-out strength of the sheet not in contact with the screw head (Pnot/Ω) and of the screw tension (Pnts/Ω). Refer to Section J4.4.1 of AISI S100.
8. Allowable pull-over strength is based on the lesser of the pull-over strength of the sheet in contact with the screw head (Pnov/Ω) and Pnts/Ω. Refer to Section J4.4.2 of AISI S100.
   Pull-over capacities have been reduced by 50%, based on the assumption that eccentrically loaded connections produce a non-uniform pull-over force on the head of the fastener.
   Pull-over capacities can be multiplied by 2 where no eccentric load is applied to fasteners but must be limited to the Pnts/Ω.
9. Where fasteners are subjected to combined shear and tension, refer to Section J4.5 in AISI S100.
10. Capacities in bold font are governed by the strength of the screw, Pnvs or Pnts, not by sheet steel capacity.
11. The minimum distance from the center of the screw to the edge or end-of-steel is assumed to be 1.5 times the nominal diameter of the screw per AISI 240-20, Section B1.5.1.1.
12. When multiple fasteners are used, screws are assumed to have a center-to-center spacing of at least 3 times the nominal diameter per AISI 240-20, Section B1.5.1.2.

Allowable Screw Shear and Tension Capacities (lb)

Thickness (Mils)	Yield Strength, Fy (ksi)	Tensile Strength, Fu (ksi)	# 8 Screw 0.164'' dia., 0.272'' head Pnvs/Ω = 426 lb,Pnts/Ω = 469 lb			# 10 Screw 0.19'' dia., 0.34'' head Pnvs/Ω = 548 lb,Pnts/Ω = 653 lb			# 12 Screw 0.216'' dia., 0.34'' head Pnvs/Ω = 777 lb,Pnts/Ω = 1173 lb			1/4" Screw 0.25'' dia., 0.409'' head Pnvs/Ω = 1016 lb,Pnts/Ω = 1480 lb		
				Tension			Tension			Tension			Tension	
			Shear	Pull- Out	Pull- Over	Shear	Pull- Out	Pull- Over	Shear	Pull- Out	Pull- Over	Shear	Pull- Out	Pull- Over
18	33	33	48	29	42	52	33	53	56	38	53	60	44	64
27	33	33	89	43	64	96	50	79	102	57	79	110	66	96
30	33	33	103	48	70	111	55	87	118	63	87	127	73	105
33	33	45	164	72	106	177	84	132	189	95	132	203	110	159
43	33	45	244	94	138	263	109	172	280	124	172	301	144	207
54	33	45	344	118	173	370	137	217	395	156	217	425	181	261
54	50	65	**426**	171	250	535	198	313	570	225	313	613	261	376
68	33	45	**426**	149	218	522	173	273	557	196	273	599	227	328
68	50	65	**426**	215	315	**548**	249	394	**777**	283	394	866	328	474
97	33	45	**426**	213	311	**548**	246	389	**777**	280	389	**1016**	324	468
97	50	65	**426**	307	449	**548**	356	562	**777**	404	562	**1016**	468	676
118	33	45	**426**	260	380	**548**	301	475	**777**	342	475	**1016**	396	572
118	50	65	**426**	375	**469**	**548**	435	**653**	**777**	494	686	**1016**	572	826

Weld Table Notes

1. Allowable weld capacities are based on section J2.4 (for fillet welds) and J2.5 (for flare groove welds) of the AISI S100-16/S2-20.
2. When connecting materials of different steel thicknesses or tensile strengths, use the lowest values.
3. Weld capacities are based on Allowable Strength Design (ASD) and include appropriate safety factors.
4. Weld capacities are based on either 3/32" or 1/8" diameter E60 or E70 Electrodes. For thinner materials, 0.030" to 0.035" diameter wire electrodes may provide best results.
5. Parallel capacity is considered to be loading in the direction of the weld.
6. For flare groove welds, the effective throat of weld is conservatively assumed to be less that 2t.

Allowable Weld Capacity (Pounds) for 1-inch Long Welds

Thickness (Mils)	Design Thickness	Fy: Yield (ksi)	Fu: Tensile (ksi)	Fillet Welds		Flare Groove Welds	
				Parallel	Perpendicular	Parallel	Perrpendicular
43	0.0451	33	45	619	864	544	663
54	0.0566	33	45	822	1084	682	832
54	0.0566	50	65	1188	1566	985	1202
68	0.0713	33	45	1082	1365	859	1048
68	0.0713	50	65	1563	1972	1241	1514
97	0.1017	33	45	1618	1947	1226	1495
97	0.1017	50	65	2337	2813	1771	2159
118	0.1242	33	45	Note-1	Note-1	Note-2	Note-2
118	0.1242	50	65	Note-1	Note-1	Note-2	Note-2

Note-1 For fillet welds, AISI S100 equation E2.5-4 must be checked for 118 mil material, or whenever the thickness of thinnest part is greater than 0.10-inch.

Note-2 For flare groove welds, AISI S100 equation E2.6-4 must be checked for 118 mil material, or whenever the thickness of thinnest part is greater than 0.10-inch.



Example Details

Visit the SFIA website to find more details.

Stud Bracing with Cold-Rolled Channel

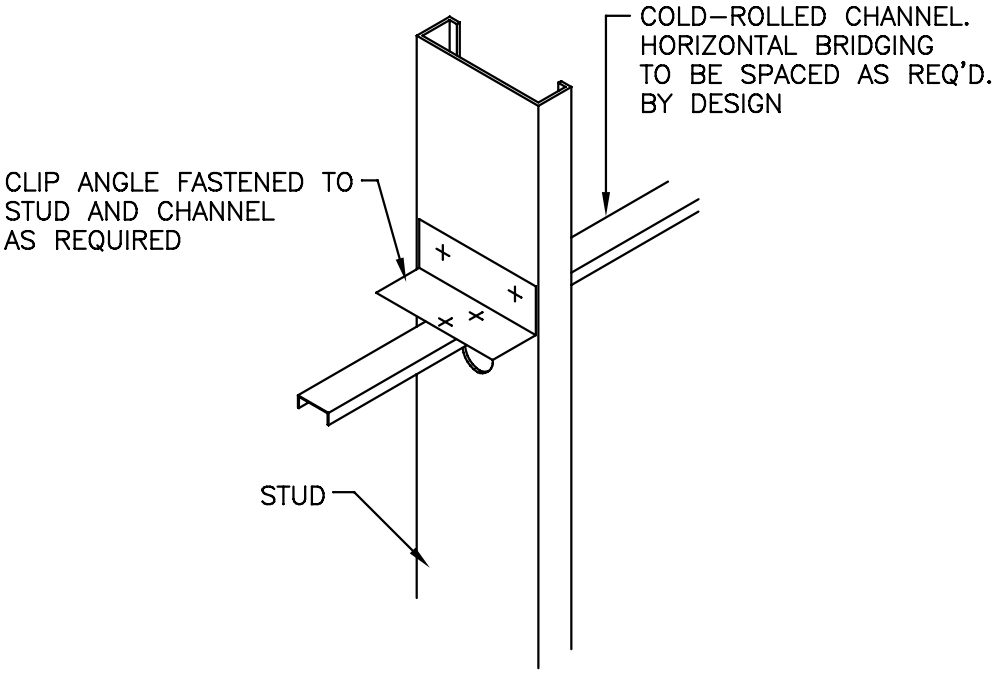

Stud Bridging with Strap and Blocking

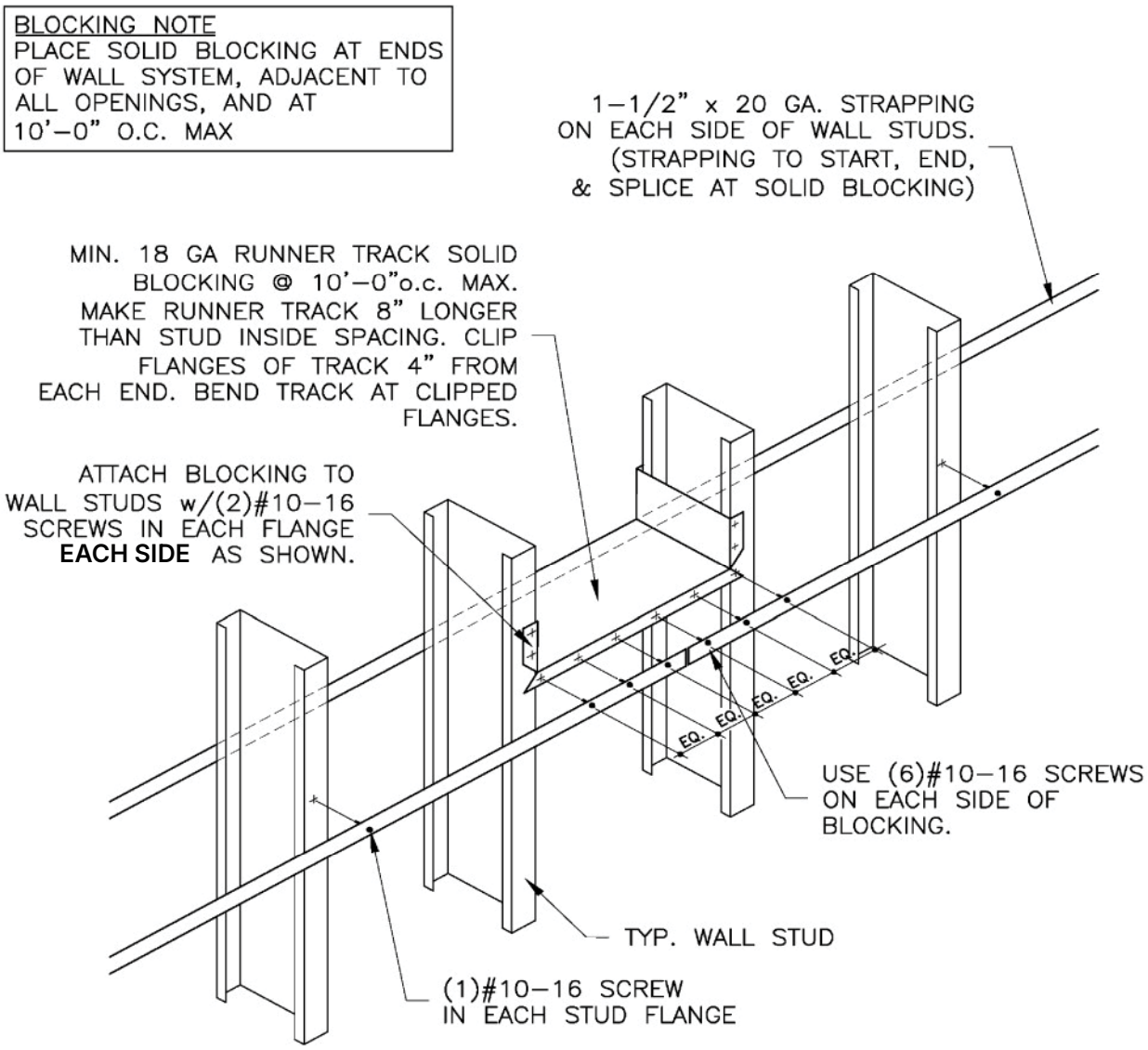

STRAPPING LATERAL BRACING

1–1/2" x 20GA. STRAP WITH RUNNER TRACK BLOCKING

BLOCKING NOTE:
PLACE SOLID BLOCKING AT ENDS OF FLOOR SYSTEM, ADJACENT TO ALL OPENINGS, AND AT 10'–0"o.c. MAX.

STRAP NOTE:
TOP STRAP NOT REQ'D. IF CONTINUOUSLY ATTACHED RIGID SHEATHING IS USED. TEMPORARY BRACING OF TOP FLANGE DURING CONSTRUCTION MAY BE REQ'D.

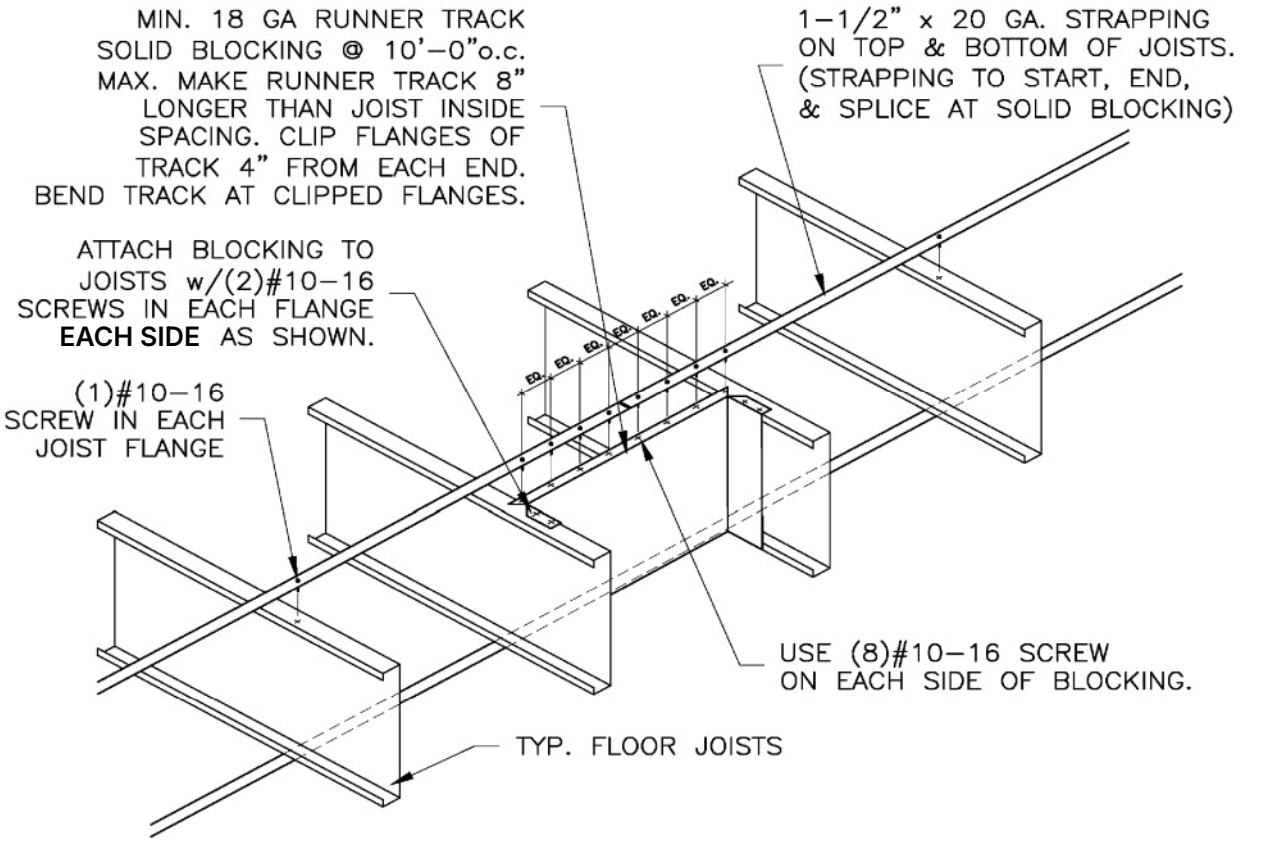

BRIDGING RECOMMENDATIONS	
SPANS	ROWS REQUIRED
UP TO 14'	ONE ROW @ MID–SPAN
14' TO 20'	TWO ROWS @ THIRD POINTS
20' TO 26'	THREE ROWS @ QUARTER POINTS

JOIST BRIDGING

1–1/2" x 20GA. STRAP WITH RUNNER TRACK BLOCKING

Floor Blocking Detail

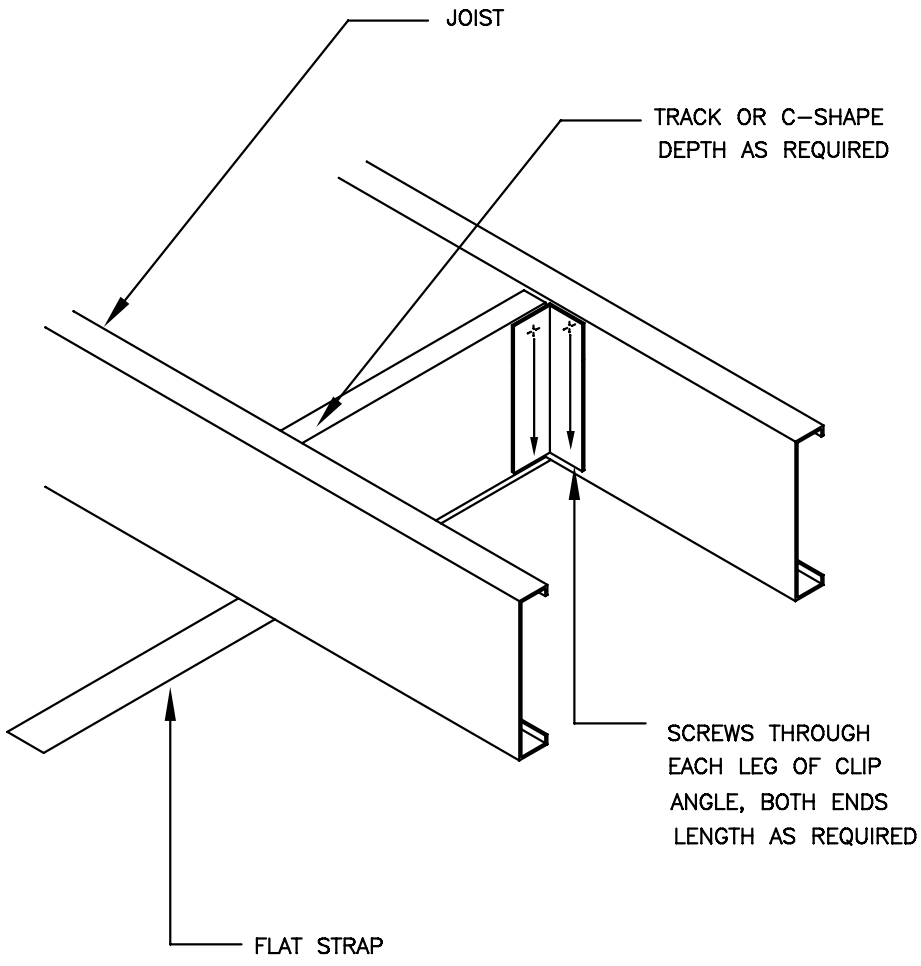

Box Header to Jamb

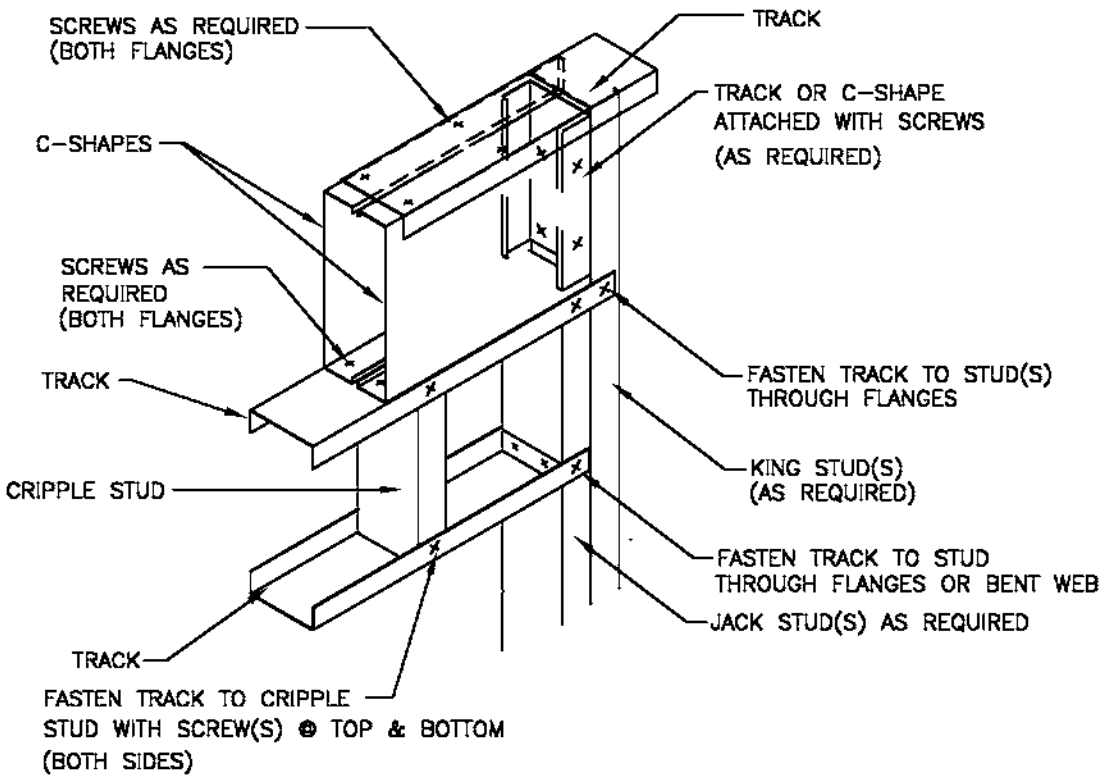

Boxed Header

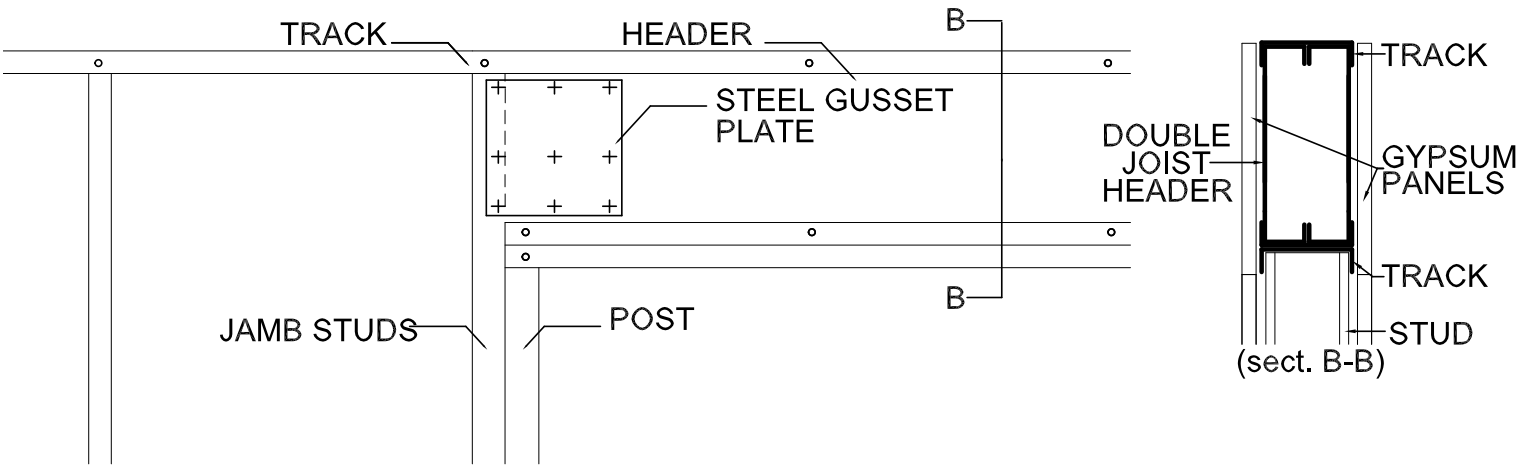

General Notes

1. Size and depth of header based on span and load conditions as determined by the Structural Specialty Engineer or as required by design.
2. Steel gusset size and gauge to be determined by load conditions shall be installed on both sides of the header/jamb interface.
3. Steel gusset plate attached with mechanical fasteners, size and spacing to meet specific design.
4. Specially designed proprietary accessories may be used in place of the steel gusset plates. Consult with accessory manufacturer for specific design.
5. Fasteners may be subsituted with welds as required if minimum steel thickness requirement of 54 mils is met.
6. Gypsum panels shown on both sides of cold-formed steel stud. Type and thickness of panel as required to meet job conditions.
7. Consult with specialty structural engineer for structural stud design.
   DISCLAIMER: This detail must not be used without a complete evaluation by the owner's design professional.

Web Stiffener at Continuous Joist

Not To Scale

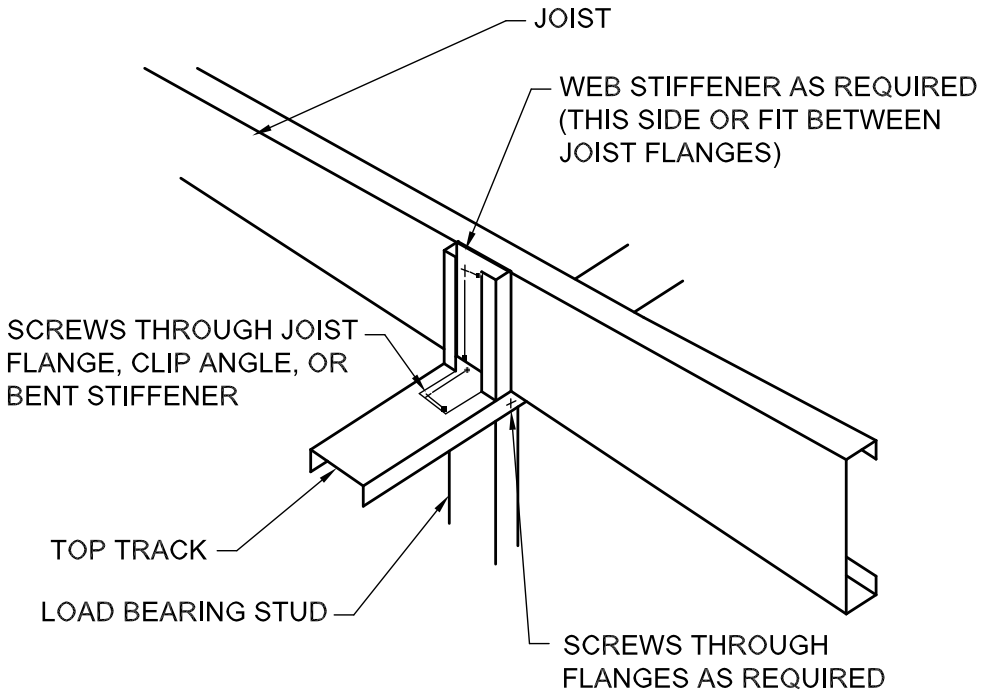

General Notes

1. Detail is from the AISI Document entitled Low-Rise Residential Construction Details.
2. Floor joist must bear directly on line with structural stud underneath.
3. Consult with specialty structural engineer for floor and wall design.

DISCLAIMER: This detail must not be used without a complete evaluation by the owner's design professional to verify the validity of the design.

Web Stiffener at Load Bearing Wall

Not To Scale

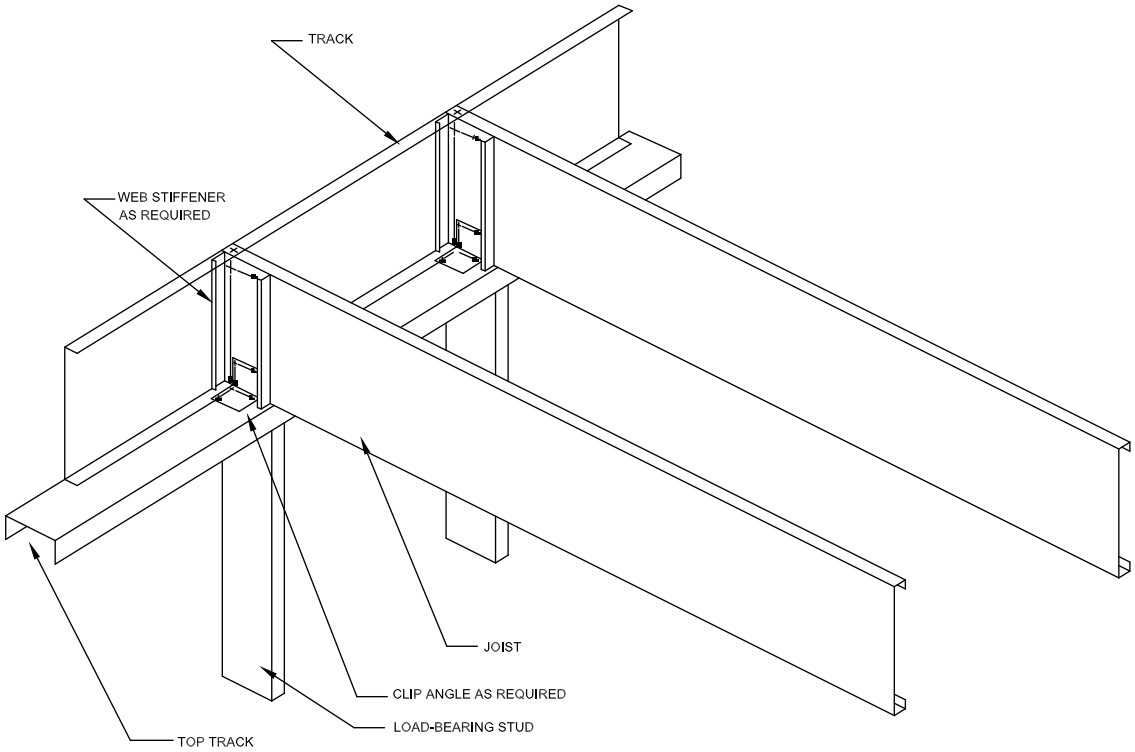

General Notes

1. Detail is from the AISI Document entitled Low-Rise Residential Construction Details.

DISCLAIMER: This detail must not be used without a complete evaluation by the owner's design professional to verify the validity of the design.

Two Story X-Brace

Not To Scale

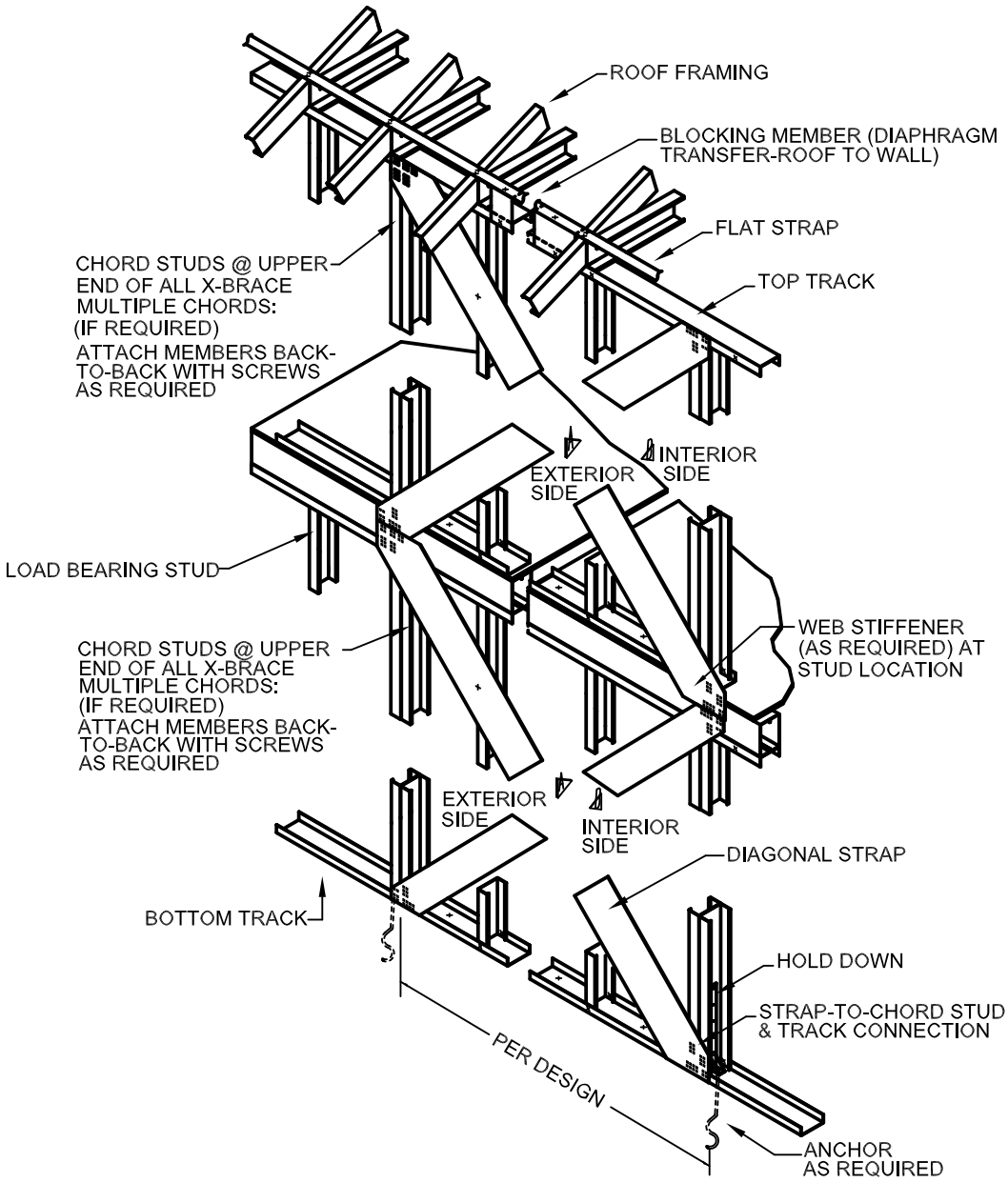

General Notes

1. Steel strap to be pre-tensioned or pre-tensioned after a majority of dead load is in place.
2. Detail is from the AISI Document entitled Low-Rise Residential Construction Details.
3. Consult with specialty structural engineer for wall and roof design.

DISCLAIMER: This detail must not be used without a complete evaluation by the owner's design professional to verify the validity of the design.

Curtain Wall Spandrel Panel

General Notes

1. Consult with specialty structural engineer for curtain wall design.
2. Gypsum panel type and thickness on curtain wall as required to meet design considerations.
3. Air/water barrier continuous from foundation to roof per architectural drawings and specifications.
4. Continuous and stud cavity insulation and to meet requirements of IECC or ASHRAE 90.1 as per architectural drawings and specifications.

DISCLAIMER: This detail must not be used without a complete evaluation by the owner's design professional to verify the validity of the design.

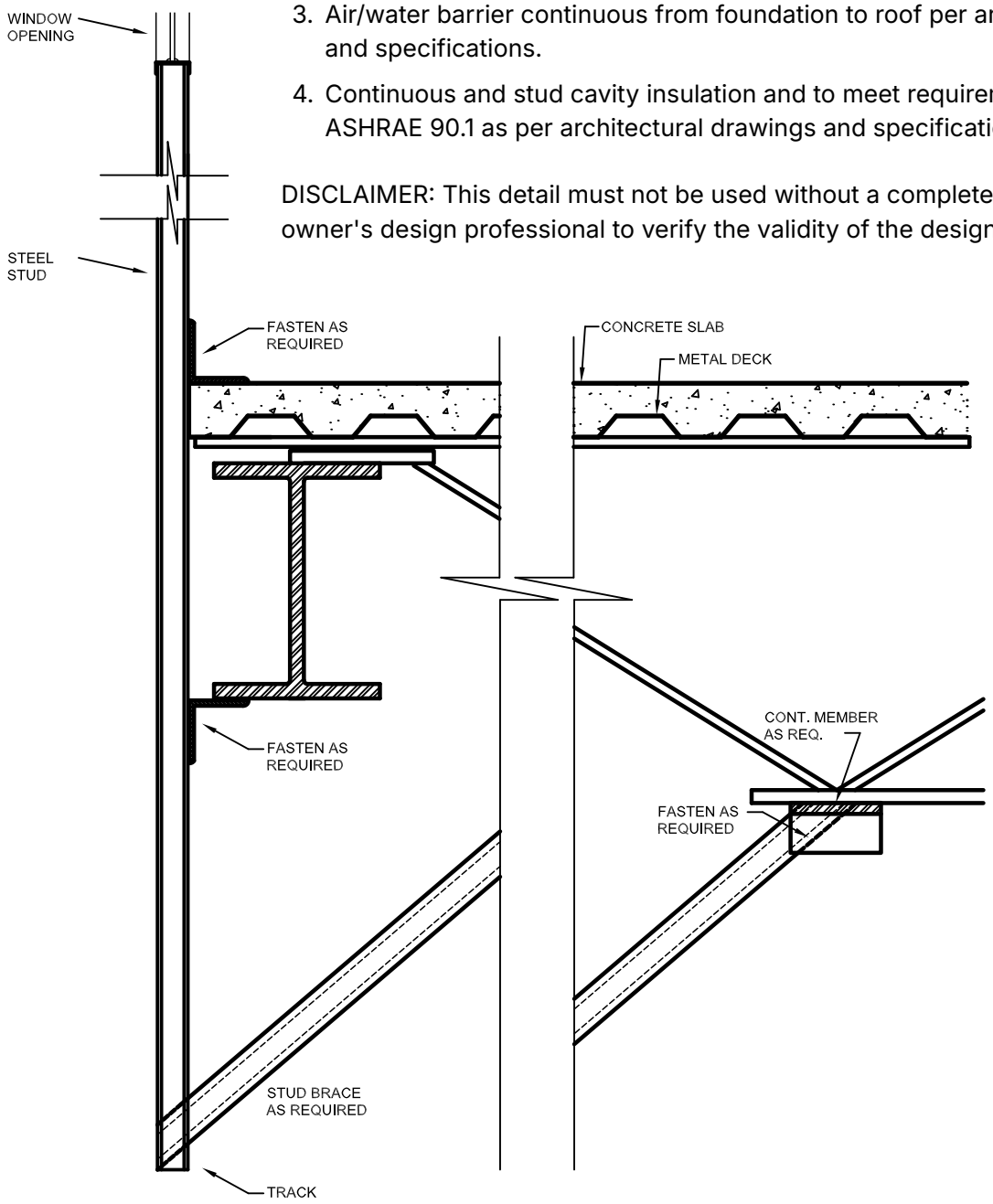

Additional Technical Resources

As the use of cold-formed steel has grown over the past 60 years, so has the number of resources available to engineers, architects, contractors, and suppliers. The Resource Center of the Steel Framing Industry Association web site (www.steelframing.org/resources) is intended to help the design and construction professional cut through the clutter to find needed resource and contains a number of downloadable publications and links to other technical resources.

Code Compliance Research Report, CCRR-0224.

The SFIA Code Compliance Research Report (CCRR), issued by Architectural Testing Inc., provides the evidence, technical information, and professional evaluation that standard cold-formed steel framing stud and track manufactured by SFIA members comply with the 2024 International Building Code, 2024 International Residential Code, 2023 Florida Building Code including High Velocity Hurricane Zone (HVHZ), and the 2022 California Building Code.

ICC-Evaluation Service Report, ICC-ES 4205.

Evaluation reports from ICC Evaluation Service® may be used by code offi cials to verify that building products manufactured by SFIA members comply with code requirements. The evaluation reports provide information about what code requirements or acceptance criteria were used to evaluate the product, how the product should be installed to meet the requirements, how to identify the product, and much more. ES Reports are divided into eleven major areas.

Guide Specifications

Section 05400 - Cold-Formed Metal Framing
For use in the preparation of a project specification section covering cold-formed steel exterior wall studs, floor joists, trusses, ceiling and roof joists, and rafters. Materials may be fi eld installed or shop fabricated and fi eld erected. Studs may be either axially-load bearing or non-axially load bearing. Click here to download.

Section 092216 - Nonstructural Metal Framing
For use in the preparation of a project specifi cation section covering metal framing systems for interior non-load bearing walls, interior ceilings and exterior soffits. Click here to download.

LEED and Sustainability

LEED® with Cold-Formed Steel: Cold-formed steel products manufactured by Steel Framing Industry Association members help your project quality for multiple points under LEED® v4 for BD+C. Click here to download.

Environmental Product Declaration (EPD) for Cold-Formed Steel Framing

EPDs are developed from a Life Cycle Assessment and can help designers earn credits under LEED v4. This EPD represents cold-formed steel (CFS) studs and track made from hot-dip galvanized steel, produced and manufactured in U.S. and Canada. The steel in the studs and track is produced at a mix of steel mill types in the U.S. and Canada, which use both the BOF (basic oxygen furnace) and EAF (electric arc furnace) route for steelmaking.

Apparent Sound Insulation in Cold-Formed Steel Buildings

This report provides the Design Professional with information that maybe needed for enhanced sound control in buildings using ASTC rather than STC.

Typical Construction Details

They are intended to provide designers and contractors with guidance on design, detailing, and construction of buildings that utilize cold-formed steel framing members. These products should not be used in design or construction without an independent evaluation by a qualifi ed engineer or architect to verify the suitability of a particular product for use in a specific application.

Directory of Fire and Acoustic Rated Assemblies

This searchable directory provides the user with the ability to search a comprehensive range of fire and sound-rated cold-formed steel floor, wall and roof assemblies as listed by the major recognized testing agencies.

Wall System Design Center

An online resource that provides architects, owners, developers, and contractors with needed information about integrated wall and ceiling solutions, including how to assess the performance attributes of the various system components, and to help determine how these various components can impact the overall performance of the system.Apparent Sound Insulation in Cold-Formed Steel Buildings.

Fire Rated Assemblies

February 2023

Question: Can standard products manufactured by SFIA members be used in the Fire Rated assemblies published by the recognized testing agencies?

Answer: Except where the word “proprietary” appears in system or element descriptions, all systems contained within the major fi re rated directories (published by the Gypsum Association, UL, Factory Mutual, etc.) are considered generic assemblies utilizing any product of any manufacturer provided that the products meet the appropriate standards.

The steel framing members included in the SFIA Product Technical Guide are considered “generic”, and have been reviewed for compliance with the governing standards, including AISI 2012, the International Building Code (2021), California Building Code (2022) and Florida Building Code (2020), including (HPVZ), and therefore may be used in any rated assemblies published by the GA, UL, FM, or other recognized testing agency. In addition, steel framing members produced by SFIA member companies participate in a code compliance certifi cation program administered by an independent third-party.

SFIA generic framing members that meet the minimum requirements for web depth, thickness, and other characteristics and therefore may be used in the generic published rated assemblies.

Underwriters Laboratories Rated Designs

The individual listings of UL rated designs identify the main elements of an assembly as numbers in a series (for U465: 1. Floor and Ceiling Runners, 2. Steel Studs, 3. Batts and Blankets, 4 Gypsum Board, 5. Joint Tape and Compound, 6. Resilient Channel, 8. Mineral and Fiber Board (optional), etc.). Unless a proprietary product is identifi ed as being the component in the description, that element is generic and any standard product that meets this description is permitted for use in this design.

Alternative products may also be used in place of the standard or generic, and the permitted products identifi ed in three ways, as a second level in the numerical series (i.e., 1A., 1B., 1C., etc.), with an asterisk (*), and with the wording “as an alternate to....” or “in lieu of...”. The products that have been approved for use in lieu of the standard products are then listed in the UL Design.

Submitted by:

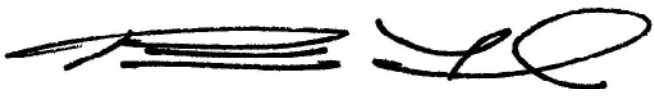

Patrick Ford, P.E.
Technical Director

DEMAND THE BEST

Insist on SFIA-Certified Steel

Certified Cold-Formed Steel products are the intelligent choice with benefits to the contractor, designer, owner, and environment.



SFIA-certified products undergo rigorous third-party inspections to ensure they meet industry standards for code compliance.

The SFIA-certified products meet or exceed the requirements of the applicable building codes and reference applicable standards. The SFIA certification program follows the most recent international standards published by the International Code Council, the most widely recognized building code authority in North America.

Your reputation depends on quality. So does your framing. SFIA certification is your assurance that the steel framing products you use meet the highest standards in the industry.

Look for the SFIA label.
Ask your supplier today.

SFIA
STEEL FRAMING INDUSTRY ASSOCIATION

SFIA

STEEL FRAMING INDUSTRY ASSOCIATION

The Steel Framing Industry Association is dedicated to expanding the market for cold-formed steel in construction through programs and initiatives that Promote the use of cold formed steel framing as a sustainable and cost-effective solution, Advocate the development and acceptance of favorable code provisions, Educate members with reliable data and other critical information that is essential to effective business planning, and create a positive environment for Innovation. The SFIA is the only organization where members come from virtually every facet of the construction industry, including steel mills, coil coaters, stud and connector manufacturers, component fabricators, engineers, researchers, suppliers/distributors, and builders and framing contractors. This uniquely broad membership enables us to identify issues and opportunities, along with programs and solutions that can be effectively implemented across the industry.

513 West Broad Street, Suite 210
Falls Church, VA 22046
Phone: 703-538-1613
Fax: 703-538-1733
membership@steelframingassociation.org
www.steelframing.org

Version 2026.1.7