# Code Compliance Research Report
# CCRR-0224

**Issue Date: 06-18-2015**
**Revision Date: 02-02-2026**
**Renewal Date: 01-31-2027**

**DIVISION: 05 00 00 – METALS**
**Section: 05 40 00 – Cold-Formed Metal Framing**
**Section: 05 41 00 – Structural Metal Stud Framing**
**Section: 05 42 00 – Cold-Formed Metal Joist**
**DIVISION: 09 00 00 – FINISHES**
**Section: 09 22 16 – Nonstructural Metal Framing**

**REPORT HOLDER:**
**STEEL FRAMING INDUSTRY ASSOCIATION**
**513 WEST BROAD STREET, SUITE 210**
**FALLS CHURCH, VIRGINIA 22046**
**(703) 538-1602**
www.steelframingassociation.org

**ADDITIONAL LISTEES:**

**CALIFORNIA EXPANDED METAL PRODUCTS COMPANY (CEMCO)**
**13191 CROSSROADS PARKWAY NORTH SUITE 325**
**CITY OF INDUSTRY, CA 91746**
**(626) 369-3564**
www.cemcosteel.com

**CGK, INC. DBA PREMIER STEEL FABRICATION**
**10811 RUSH STREET**
**SOUTH EL MONTE, CA 91733**
**(626) 444-2649**
http://www.premiersteelfabrication.com

**CLARKDIETRICH™ BUILDING SYSTEMS**
**9050 CENTRE POINTE DR., SUITE 400**
**WEST CHESTER, OH 45069**
**(513) 870-1100**
www.clarkdietrich.com

**DELUXE BUILDING PRODUCTS LLC**
**1350 EAST LEXINGTON AVE.,**
**POMONA, CA 91766**
**(909) 342-2353**
www.deluxebuildingproducts.com

**FRAMESTEEL**
**8625 OTIS STREET**
**SOUTH GATE, CA 90280**
**323-923-4900**
www.framesteel.com

**FRAMETEK STEEL PRODUCTS INC.**
**1495 COLUMBIA AVE, BUILDING 4**
**RIVERSIDE, CA 92507**
**(951) 369-5204**
www.frametek steel.com

**J AND S LIVONIA, INC. DBA JAIMES INDUSTRIES**
**12658 RICHFIELD COURT**
**LIVONIA, MI 48150**
**(734) 793-9000**
www.JaimesInd.com

**MBA BUILDING SUPPLIES**
**2200 TEMPEL DRIVE**
**LIBERTYVILLE, IL 60048**
**(847) 680-7773**
www.mbastuds.com

**MILL STEEL FRAMING**
**2905 LUCERNE DRIVE SE**
**GRAND RAPIDS, MI 49546**
**(812) 670-4195**
www.millsteelframing.com

**PANEL REY S.A.**
**SERAFÍN PEÑA SUR 938, CENTRO**
**MONTERREY, NUEVO LEÓN, MÉXICO 66560**
**+81-8305-3800**
www.panelrey.com

**R & P SUPPLY, INC**
**2642 E LONE MOUNTAIN ROAD**
**NORTH LAS VEGAS, NV 89081**
**(702) 400-8539**
http://rpsupplyinc.com

**STEELFAST FRAMING SYSTEMS**
**575 INDUSTRIAL PARKWAY**
**GREENVILLE, ALABAMA 36037**
**334-383-0333**

**REPORT SUBJECT:**
**Standard Cold-Formed Steel Framing Members**

## 1.0 SCOPE OF EVALUATION

**1.1.** This research report addresses compliance with the following Codes:

- 2024, 2021,and 2018 *International Building Code®* (IBC)
- 2024, 2021, and 2018 *International Residential Code®* (IRC)
- 2023 and 2020 *Florida Building Code - Building* (FBC-B) (see Section 8.1)
- 2023 and 2020 *Florida Building Code - Residential* (FBC-R) (see Section 8.1)
- 2025 and 2022 *California Building Code* (CBC) (see Section 8.2)
- 2025 and 2022 *California Residential Code* (CRC) (see Section 8.2)
- 2023 *City of Los Angeles Building Code* (see section 8.3)

**1.2.** NOTE: This report references 2018 IBC Code sections with [2015] IBC Code sections shown in brackets where they differ. Standard Cold-Formed Steel Framing Members have been evaluated for the following properties:

- Structural
- Corrosion protection

**1.3.** Cold-formed steel framing members (studs, tracks, and U-channels) recognized in this report are used for framing of nonload-bearing interior walls, curtain walls, load-bearing walls, floor joists, headers, roof rafters and roof trusses.

## 2.0 STATEMENT OF COMPLIANCE

Cold-formed steel framing members comply with the Codes listed in Section 1.1, for the properties stated in Section 1.2 and uses stated in Section 1.3, when installed as described in this report, including the Conditions of Use stated in Section 6.

### 2.1 2024 IBC and IRC Evaluation Reports

The Intertek CCRR is an *Evaluation Report* for approval of an alternate material, design, or method of construction in accordance with Section 104.2.3.6.1 of the 2024 IBC and Section R104.2.2.6.1 of the 2024 IRC.

## 3.0 DESCRIPTION

**3.1.** Materials

**3.1.1.** Non-structural steel framing members are cold-formed from steel coils conforming to ASTM A 1003 Non-Structural Grade, Type NS. Non-structural members have a minimum protective coating of G40 galvanization conforming to ASTM A 653.

**3.1.2.** Structural steel framing members are cold-formed from steel coils conforming to ASTM A 1003 Structural Grade 33 Type H and Structural Grade 50 Type H. Structural members have a minimum protective coating in accordance with Table A4-1 CP 60 as listed in AISI S240 [Table 1, CP 60 as listed in ASTM C 955.]

**3.2.** Studs are manufactured with and without factory web punchouts. Web punchout holes are spaced a minimum of 24 inches on center along the stud length and shall not be located less than 10 inches from the end of the member to the near edge of the web punchout. Web punch-out widths shall not exceed 2.5 inches, or half of the member depth. Web punch-out length shall not exceed 4.5 inches. Tracks and U-channels are manufactured without web punch-outs.

**3.3.** See page 2 of the SFIA Technical Guide for Cold-Formed Steel Framing Products for member designations**.**

## 4.0 PERFORMANCE CHARACTERISTICS

**4.1.** Reference the SFIA Technical Guide for Cold-Formed Steel Framing Products (attached) for section properties in accordance with AISI S100 and design capacities and tables established in accordance with AISI S220 and, AISI S240, where only the following pages are within the scope of this report:

**4.1.1.** General Product Information on pages 7-9.

**4.1.2.** Non-Structural Stud, Structural Stud, and Track Section Properties on pages 10-22.

**4.1.3.** Limiting Wall Heights Tables for Interior Non-Structural Non-Composite on pages 27-30.

**4.1.4.** Limiting Wall Height Tables for Interior Non-Structural Composite on pages 24-26. Gypsum wall board must be a minimum of 5/8" thick and Type X, complying with ASTM C1396 and manufactured by American Gypsum, CertainTeed, Georgia Pacific, Lafarge, National Gypsum, Temple-Inland, or USG. The interior nonload-bearing wall assemblies shall be limited to interior installations where the superimposed axial load is zero pounds.

**4.1.5.** Limiting Wall Heights Tables for Curtain Wall Single-Span on pages 31-40.

**4.1.6.** Combined Axial and Lateral Allowable Load Tables on pages 41-65

**4.1.7.** Allowable Floor Joist Span Tables on pages 66-71.

**4.1.8.** Header Allowable Load Tables on pages 72-75. Lateral bracing of the compression flange shall be spaced at intervals not exceeding $L_u$ (see section properties) to develop full allowable bending strength, $M_a$.

**4.1.9.** Allowable Web Crippling Load Tables on pages 76-80.

**4.1.10.** Channel Section Properties on pages 81-84. Allowable moments ($M_a$) apply to flexural members with the compression flange continuously braced.

**4.2.** For construction governed by the FBC High Velocity Hurricane Zone (HVHZ), the interior wall heights are limited to the heights at the L/240 and L/360 deflection levels.

## 5.0 CONDITION OF USE

The cold-formed steel framing members described in this Research Report comply with, or is a suitable alternative to, what is specified in those Codes listed in Sections 1.0 and 2.0 of this report, subject to the following conditions:

**5.1.** Installation must comply with this Research Report, the manufacturer's published installation instructions and the applicable Code. In the event of a conflict between the manufacturer's instructions and this report, this report governs.

**5.2.** All designs and calculations shall be prepared by a licensed design professional according to the requirements in the jurisdiction where the project is located.

**5.3.** Jobsite manufacturing of studs or tracks is outside the scope of this report.

**5.4.** Wall assemblies based upon non-composite construction, pages 17-19 of the attached SFIA Technical Guide, are limited to a lateral (transverse) load of not more than 10 $lb/ft^2$, a superimposed vertical load, exclusive of sheathing materials, of not more than 100 lbf/ft, or a superimposed vertical load of not more than 200 lbs per stud.

**5.5.** The minimum base steel thickness of the section delivered to the jobsite must be 95% of the design thickness noted on page 3 of the SFIA Technical Guide for Cold-Formed Steel Framing Products.

**5.6.** Cold-Formed steel framing members identified in this report are manufactured at the manufacturing facilities recognized in Table 2 in accordance with the manufacturer's approved quality control system with inspections by Intertek.

## 6.0 SUPPORTING EVIDENCE

**6.1.** Manufacturer's drawings and installation instructions.

**6.2.** Steel Framing Industry Association Technical Guide for Cold-Formed Steel Framing Products, Version 2026.1.7 published January 2026.

**6.3.** Reports of testing and engineering analysis demonstrating compliance with ICC-ES AC46, *Acceptance*

*Criteria for Cold-formed Steel Framing Members*, approved October 2019 (editorially revised December 2020).

**6.4.** Reports of evaluation and engineering analysis in accordance with AISI S100-16, North American Specification for the Design of Cold-Formed Steel Structural Members.

**6.5.** Reports of testing and engineer analysis demonstrating compliance with ICC-ES AC86, Acceptance Criteria for Cold-Formed Steel Framing Members - Interior Nonload-Bearing Wall Assemblies, approved June 2019 (editorially revised October 2021).

**6.6.** Documentation of an Intertek approved quality control system for the manufacturing of products recognized in this report.

## 7.0 IDENTIFICATION

The Standard Cold-Formed Steel Framing Members described in this Research Report are identified with labeling at a maximum of 96 inches that includes the following information:

**7.1.** Manufacturer's name, logo, or other positive identification;

**7.2.** For structural steel framing members: framing member designation, uncoated metal thickness, yield strength, and galvanization coating designation, CP60

**7.3.** For non-structural steel framing members: framing member designation, uncoated metal thickness, yield strength if other than 33 ksi, galvanization coating if other than G40, and designation "NS".

**7.4.** Intertek designation and Code Compliance Research Report number (Intertek CCRR-0224)

**7.5.** Bundles of like members shall be identified with the, manufacturer's name, length of product, quantity of product, uncoated metal thickness, yield strength, galvanization coating, and Intertek identification mark and Code Compliance Research Report number as shown:




## 8.0 OTHER CODES

### 8.1. FLORIDA BUILDING CODE

**8.1.1. Scope of Evaluation:** The Standard Cold-Formed Steel Framing Members were evaluated for compliance with the 2023 and 2020 *Florida Building Code – Building and Florida Building Code – Residential.*

**8.1.2. Conclusion:** The Standard Cold-Formed Steel Framing Members, described in Sections 2.0 through 7.0 of this Research Report, comply with the 2023 and 2020 *Florida Building Code – Building* and *Florida Building Code – Residential*, including the High-Velocity Hurricane Zone provisions.

### 8.2. CALIFORNIA BUILDING CODE

***8.2.1.* Scope of Evaluation:** The Standard Cold-Formed Steel Framing Members were evaluated for compliance with the 2025 and 2022 *California Building Code* and *California Residential Code.*

**8.2.2. Conclusion:** The Standard Cold-Formed Steel Framing Members, described in Sections 2.0 through 7.0 of this Research Report, comply with the 2025 and 2022 *California Building Code* and *California Residential Code*.

### 8.3. CITY OF LOS ANGELES BUILDING CODE

***8.3.1.* Scope of Evaluation:** The Standard Cold-Formed Steel Framing members were evaluated for compliance with the 2023 *City of Los Angeles Building Code* and *City of Los Angeles Residential Code*.

**8.3.2. Conclusion:** The Standard Cold-Formed Steel Framing Members, described in Sections 2.0 through 7.0 of this Research Report, complies with the *City of Los Angeles Build Code,* and *City of Los Angeles Residential Code* for the editions indicated in Section 1.1 of this report.

## 9.0 CODE COMPLIANCE RESEARCH REPORT USE

**9.1.** Approval of building products and/or materials can only be granted by a building official having legal authority in the specific jurisdiction where approval is sought.

**9.2.** Code Compliance Research Reports shall not be used in any manner that implies an endorsement of the product by Intertek.

**9.3.** Reference to the Intertek web site, https://bpdirectory.intertek.com is recommended to ascertain the current version and status of this report.

**Table 1 – Code Referenced Standards**

| 2024 and 2021 IBC [2018 IBC] | | 2023 FBC [2020 FBC] | | 2025, 2022 CBC and 2023 LABC | |
|---|---|---|---|---|---|
| Structural members | Nonstructural members | Structural members | Nonstructural members | Structural members | Nonstructural members |
| AISI S100-16(2020) w/S2-20 [AISI S100-16]<br>AISI S240-20 [AISI S240-15] | AISI S100-16(2020) w/S2-20 [AISI S100-16]<br>AISI S220-20 [AISI S220-15] | AISI S100-16(2020) w/S2-20 [AISI S100-16]<br>AISI S240-20 [AISI S240-15] | AISI S100-16(2020) w/S2-20 [AISI S100-16]<br>AISI S220-20 [AISI S220-15] | AISI S100-16(2020) w/S2-20<br>AISI S240-20 | AISI S100-16(2020) w/S2-20<br>AISI S220-20 |

This Code Compliance Research Report ("Report") is for the exclusive use of Intertek's Client and is provided pursuant to the agreement between Intertek and its Client. Intertek's responsibility and liability are limited to the terms and conditions of the agreement. Intertek assumes no liability to any party, other than to the Client in accordance with the agreement, for any loss, expense or damage occasioned by the use of this Report. Only the Client is authorized to permit copying or distribution of this Report and then only in its entirety, and the Client shall not use the Report in a misleading manner. Client further agrees and understands that reliance upon the Report is limited to the representations made therein. The Report is not an endorsement or recommendation for use of the subject and/or product described herein. This Report is not the Intertek Listing Report covering the subject product and utilized for Intertek Certification and this Report does not represent authorization for the use of any Intertek certification marks. Any use of the Intertek name or one of its marks for the sale or advertisement of the tested material, product or service must first be approved in writing by Intertek.

**TABLE 2 – MANUFACTURING LOCATIONS**

| Listee | Location | Structural | Non-Structural |
|---|---|---|---|
| **CEMCO** | 223 North Covina Lane, City of Industry, CA 91746 | X | |
| | 9410 Heinz Way, Henderson, CO 80640 | X | |
| | 8600 Will Rodgers Boulevard, Fort Worth, TX 76140 | X | |
| | 1001 Pittsburg-Antioch Highway, Pittsburg, CA 94565 | X | |
| **ClarkDietrich™ Building Systems** | 6510 General Drive, Riverside, CA 92509 | | X |
| | 1685 Tide Court, Woodland, CA 95776 | | X |
| **Deluxe Building Products LLC** | 1350 East Lexington Ave., Pomona, CA 91766 | X | X |
| **Framesteel** | 8625 Otis Street, South Gate, CA 90280 | X | X |
| **Frametek Steel Products** | 1495 Columbia Avenue, Riverside, CA 92507 | X | X |
| **Jaimes Industries** | 12658 Richfield Court, Livonia, MI 48150 | X | X |
| **MBA Building Supplies** | 2200 Tempel Drive, Libertyville, IL 60048 | X | X |
| | 1217 West Grand Ave Rainbow City, AL 35906 | X | |
| | 100 Fireman's Rd, Frackville, PA 17931 | X | |
| | 10880 Bekay Street, Dallas, TX 75238 | X | |
| **Mill Steel Framing** | 116 Finley Ave W, Birmingham, AL 35204 | X | |
| | 555 Gellhorn Dr, Houston, TX 77029 | X | |
| | 1195 Port Rd, Jeffersonville, IN 47130 | X | X |
| **Panel Rey** | Carr. Monterrey-Monclova Km. 11.5, El Carmen, Nuevo León, México 66560 | X | X |
| **Premier Steel Fabrication** | 10811 Rush Street, South El Monte, CA 91733 | | X |
| **R&P Supply** | 2642 East Lone Mountain Road, North Las Vegas, NV 89081 | X | X |
| **Steelfast Framing Systems** | 575 Industrial Parkway, Greenville, AL 36037 | X | X |

PUBLISHED JANUARY 2026

# Technical Guide for Cold-Formed Steel Framing Products

The data in this guide is based upon the 2020 American Iron and Steel Institute's S100-16 /S2-20 "North American Specification for the Design of Cold-Formed Steel Structural Members", and meets the requirements of the IBC 2024 Building Code, as well as the 2022 California Building Code and 2020 Florida Building Code.

Copyright © 2026 SFIA.

**Complies with the 2024 IBC and AISI S100-16/S2-20**

SFIA
STEEL FRAMING INDUSTRY ASSOCIATION

# Table of Contents


**Introduction** ..... **5**
- About this Guide ..... 5
- Material Specification ..... 6
- Disclaimer ..... 6

**General Product Information** ..... **7**
- Product Identification ..... 7
- Thickness Table ..... 8
- General Notes for all Tables ..... 8
- Stiffening Lip Length ..... 8
- Definitions of Structural Property Symbols ..... 9

**Section Properties** ..... **10**
- Section Properties Table Notes ..... 10
- Non-Structural (S) Stud Section Properties ..... 11
- Structural (S) Stud Section Properties ..... 12
- (T) Track Section Properties ..... 17
- Members with h/t between 200 and 260 ..... 23

**Limiting Wall Heights - Composite** ..... **24**
- Interior Non-Structural Composite Table Notes ..... 24
- Interior Non-Structural Composite ..... 25

**Limiting Wall Heights - Non-Composite** ..... **27**
- Interior Non-Structural Non-Composite Table Notes ..... 27
- Interior Non-Structural Non-Composite ..... 28

**Limiting Wall Heights - Curtain Wall Single Span** ..... **31**
- Wall Height Table Notes ..... 31
- Wall Height ..... 32

**Combined Axial and Lateral Load Tables** ..... **41**
- Combined Axial and Lateral Load Table Notes ..... 41
- 5 psf Lateral Load (Interior Walls Only) ..... 42
- 15 psf Lateral Load ..... 45
- 20 psf Lateral Load ..... 48
- 25 psf Lateral Load ..... 51
- 30 psf Lateral Load ..... 54
- 35 psf Lateral Load ..... 57
- 40 psf Lateral Load ..... 60
- 50 psf Lateral Load ..... 63

**Floor and Roof Joist Span Tables ..... 66**
Allowable Floor and Roof Joist Span Table Notes ..... 66
Allowable Uniform Load Table (plf) - Simple Span Joists ..... 67
Allowable Uniform Load Table (plf) - Simple Span Joists ..... 69

**Header Load Tables ..... 72**
Header Load Table Notes ..... 72
Header Allowable Uniform Loads (lb/ft) ..... 73

**Web Crippling Load Tables ..... 76**
Web Crippling Load Table Notes ..... 76
Web Crippling Conditions ..... 76
Allowable Web Crippling Loads (lbs) - Single Members ..... 77
Allowable Web Crippling Loads (lbs) - Back-to-Back Members ..... 79

**Channel Properties ..... 81**
U-Channel Section Properties ..... 81
U-Channel Allowable Ceiling Spans L/360 ..... 81
U-Channel Allowable Ceiling Spans L/240 ..... 81
U-Channel Allowable Ceiling Spans L/120 ..... 82
(Hat) Furring (F) Channel Section Properties ..... 83
(Hat) Furring (F) Channel Allowable Ceiling Spans L/360 ..... 83
(Hat) Furring (F) Channel Allowable Ceiling Spans L/260 ..... 84
(Hat) Furring (F) Channel Allowable Ceiling Spans L/120 ..... 84

**Fasteners (Screws and Welds) ..... 85**
Screw Table Notes ..... 85
Allowable Screw Shear and Tension Capacities (lb) ..... 85
Weld Table Notes ..... 86
Allowable Weld Capacity (Pounds) for 1-inch Long Welds ..... 86

**Example Details ..... 87**
Stud Bracing with Cold-Rolled Channel ..... 87
Stud Bridging with Strap and Blocking ..... 88
Floor Blocking Detail ..... 90
Box Header to Jamb ..... 91
Boxed Header ..... 92
Web Stiffener at Continuous Joist ..... 93
Web Stiffener at Load Bearing Wall ..... 94
Two Story X-Brace ..... 95
Curtain Wall Spandrel Panel ..... 96

**Additional Technical Resources ..... 97**

**Fire Rated Assemblies ..... 99**

# Steel Framing: Supporting Your Green Vision

Steel framing has a great environmental story to tell. As an architect, engineer, or specifier, you can feel GREAT about specifying steel framing on your next project.

For more information, go to [steel.org/sustainability](steel.org/sustainability)

- **Local sourcing:** more than 80% of the steel studs and tracks produced in North America come from steel that is recycled/mined/melted in North America. And 70% of the steel produced in North America comes from electric arc furnaces: that use more than 90% domestic scrap.
- **Reusability:** Steel framing can be reused indefinitely: and does not have reduced structural capacity over time.
- **Recyclability:** Steel framing is 100% recyclable. And new steel made from old scrap can be just as strong or even stronger than the original steel.
- **Durability:** Steel framing installed in structures over 100 years ago is still in service today.
- **Resilience:** Because of its ductility, strength, and noncombustibility, steel performs well during and after earthquakes, fires, and floods, and will not support the growth of mold or fuel a fire.
- **Adaptability:** reuse of steel-framed structures is common, easy, and straightforward.
- **Plays well with others:** Steel framing won't warp, shrink, or degrade the materials around it, making it a reliable partner in hybrid construction.
- **Non-combustibility:** Steel will not fuel a fire, period.

Although many practitioners think specifying more bio-based materials automatically reduces a building's carbon footprint, this is not always the case. Make sure your LCA inputs include a true cradle-to-cradle analysis, with data on the full carbon impacts of harvesting, including the bio material left in the forest, and effects of dimensional stability on the building envelope.

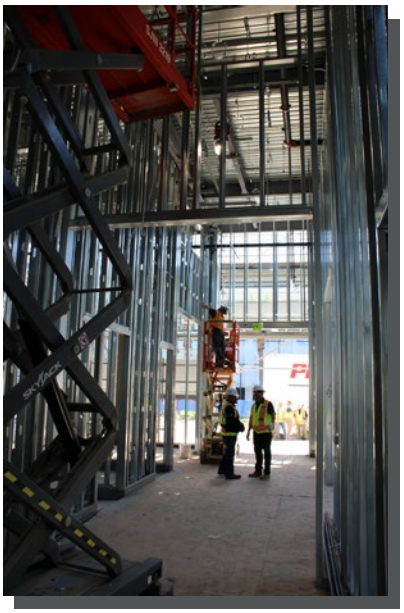

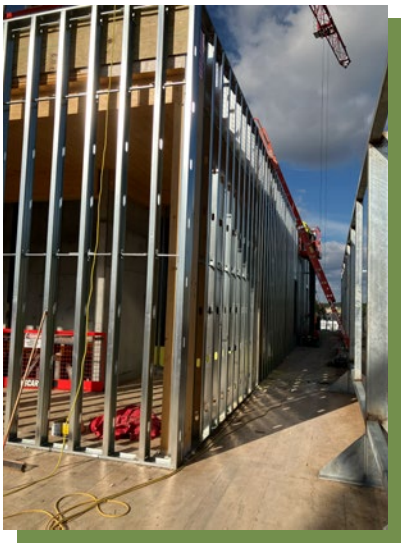



# Introduction

## About this Guide

The Steel Framing Industry Association (SFIA) was formed with the objective of assisting companies having interests in the cold-formed steel framing industry to be more successful by unifying the industry to expand the market for the use of cold formed steel systems through:

- Quality Assurance
- Promotion
- Advocacy
- Education
- Innovation

The SFIA developed this Industry leading product technical guide to comply with the latest building codes and standards.

The data in this catalog based on the American Iron and Steel Institure's AISI S100-16/S2-20 "North American Specification for the Design of Cold-Formed Steel Structural Members" and meets the requirements of the 2024 International Building Code (IBC). While building codes vary by jurisdiction, this program follows the most recent international standards published by the International Code Council.

Technical Data in this publication is applicable to the SFIA Member Companies.

For a complete directory of SFIA Members who are certified for compliance with the International Building Code and all applicable ASTM and AISI Standards:

**http://www.archtest.com/certification/SFIA_SteelFraming_Intertek.aspx**

Copyright © 2026 SFIA

## Material Specification

Products manufactured by SFIA members are formed from steel with a minimum yield stress of 33 or 50 kips per square inch (ksi). Unless noted otherwise, all products covered in this SFIA catalog are engineered to meet the 2020 edition of the American Iron and Steel Institute (AISI) S100-16/S2-20, "North American Specification of the Design of Cold-Formed Steel Structural Members" and other AISI standards referenced in Section 2210 of the 2024 International Building Code (IBC-2024). The structural properties in this SFIA catalog have been computed based on allowable stress design (ASD) which includes distortional buckling considerations for all Stud Sections. For fastener tables, screw sizes and head diameters do not refer to specific fasteners which may or may not be available from SFIA member companies. Shear and tension data for screws was developed using published manufacturer data and evaluation reports available at the time of publication.

## Disclaimer

*A concerted effort has been made to ensure the accuracy of the technical data represented in this catalog. The Steel Framing Industry Association makes no representation, warranty, or guarantee in connection with this technical data and expressly disclaims any liability or responsibility for failure resulting from the use or misapplication of computations, detail drawings and specifications contained herein. All data, specifications and details contained in this catalog publications are intended as a general guide for using SFIA member companies products. These products should not be used in design or construction without an independent evaluation by a qualified engineer or architect to verify the suitability of a particular product for use in a specific application. This publication containes the latest information available at the time of printing. The SFIA and its member companies reserve the right to make modifications and/ or change materials of any of their products without prior notice or obligation. For the latest information regarding a particular manufacturer's products contact that manufacturer. All SFIA manufacturers may not produce all of the products listed in this catalog. Please contact manufacturer to verify product availablity.*

**Copyright ©2025 Steel Framing Industry Association.**

# General Product Information

## Product Identification

SFIA supports the industry standard nomenclature published in AISI standards S220 section A6.3 and S240 section A5.3. An example of the designator is shown below.

**Example:**

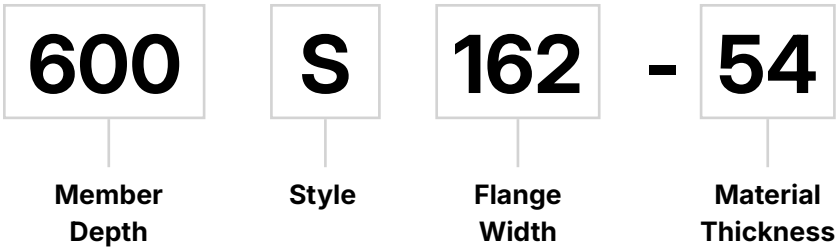


**Member Depth:**

(Example: 600 = 6" x 1/100 inches)

All member depths are taken in 1/100 inches.

For all "T" Sections, member depth is the inside to inside dimension.

**Style:**

(Example: Stud or Joist section = S)

The five alpha characters utilized by the designator system are:
S = Stud or Joist Sections
T = Track Sections
U = Channel Sections
F = Furring Channel Sections
L = Angle or L-header

**Flange Width:**

(Example: 1-5/8" = 1.625" truncated to 162 × 1/100 inches)

All flange widths are taken in 1/100 inches.

**Material Thickness:**

(Example: 0.054 in = 54 mils; 1 mil = 1/1000 in.)

Material thickness is the minimum base metal thickness in mils. Minimum base metal thickness represents 95% of the design thickness.

**NOTE:** For Structural members 54 mil (16 gauge) and thicker, that have both 33 and 50 ksi yield strength options shown, the designer shall identify which yield strength they have specified and the manufacturer shall label the product with the yield strength.

## Thickness Table

| Designation Thickness (Mils) | Minimum Thickness[1] (in) | Design Thickness (in) | Design Inside Corner Radii[2] (in) | Reference Gauge No. |
|---|---|---|---|---|
| 18 | 0.0179 | 0.0188 | 0.0844 | 25 |
| 27 | 0.0269 | 0.0283 | 0.0796 | 22 |
| 30 | 0.0296 | 0.0312 | 0.0782 | 20-Drywall |
| 33 | 0.0329 | 0.0346 | 0.0765 | 20-Structural |
| 43 | 0.0428 | 0.0451 | 0.0712 | 18 |
| 54 | 0.0538 | 0.0566 | 0.0849 | 16 |
| 68 | 0.0677 | 0.0713 | 0.1070 | 14 |
| 97 | 0.0966 | 0.1017 | 0.1526 | 12 |
| 118 | 0.1180 | 0.1242 | 0.1863 | 10 |

## Stiffening Lip Length

| Section | Flange Width | Design Stiffening Lip Length (in) |
|---|---|---|
| S125 | 1 1/4" | 3/16" (0.188) |
| S137 | 1 3/8" | 3/8" (0.375) |
| S162 | 1 5/8" | 1/2" (0.500) |
| S200 | 2" | 5/8" (0.625) |
| S250 | 2 1/2" | 5/8" (0.625) |
| S300 | 3" | 5/8" (0.625) |
| S350 | 3 1/2" | 1" (1.000) |

**1** Minimum Thickness represents 95% of the design thickness and is the minimum acceptable thickness delivered to the jobsite based on section B7.1 of the AISI S100-16/S2-20.

**2** The tables in this catalog are calculated based on inside corner radii listed in this table.

## General Notes for all Tables

1. Where AISI S100-16/S2-20 is referenced, it is the *North American Specification for the Design of Cold-Formed Steel Structural Members*, 2016 Edition (Reaffirmed 2020) With Supplement 2, 2020 Edition, with US provisions. The strength increase from cold work of forming has been incorporated for flexural strength per section A3.3.2 of AISI S100-16/S2-20.
2. The effective moment of inertia for deflection is calculated at a stress which results in a section modulus such that the stress times the section modulus at that stress is equal to the allowable moment. AISI S100-16/S2-20 Specification Procedure 1 for serviceability determination has been used. Increases in the effective moment of Inertia (Ixe) may be possible at lower stress levels. Any modified values would be required to be calculated by a qualified engineer.
3. Various sections may be manufactured with yield points of 33 or 50 ksi. The yield point used for calculations are listed in the tables.
4. For sections available in both 33 and 50 ksi, the specifier must clearly indicate which yield point is required. For ex. 362S162-68 (50ksi).
5. When provided, factory punchouts will be located along the centerline of the webs of the members and will have a minimum center-to-center spacing of 24 inches. Punchouts for members greater that 2.5 inches deep are a maximum of 1.5 inches wide x 4 inches long.

   Members with depths 2.5 inches and smaller are maximum of 3/4 inches wide x 4 inches long.

## Definitions of Structural Property Symbols

### Gross Properties

Ix: Moment of inertia of gross section about the X-X axis (strong axis).

Sx: Section modulus about the X-X axis (strong axis).

Rx: Radius of gyration of the gross section about the X-X axis.

Iy: Moment of inertia of gross section about the Y-Y axis (weak axis).

Ry: Radius of gyration of the gross section about the Y-Y axis.

### Effective Properties

Ixe: Effective moment of inertia about the X-axis.

Sxe: Effective section modulus about the X-X axis (strong axis) stress = Fy.

Ma: Allowable Bending Moment - Based on the effective section modulus and the allowable stress including the strength increase from the cold-work of forming (Section A3.3.2) where applicable.

Mad: Allowable Bending Moment - Based on Distortional Bucking Strength calculated per Sections F4, F4.1 of AISI S100-16/S2-20.

$V_{ag}$: Allowable strong axis shear away from punchout, calculated in accordance with Section G2 of AISI S100-16/S2-20.

$V_{anet}$: Allowable strong axis shear at punchout, calculated in accordance with Section G3 of AISI S100-16/S2-20.

### Torsional and Other Properties

J: Saint-Venant Torsional Constant.

Cw: Torsional warping constant.

m: Distance from shear center to mid-plane of web.

Xo: Distance from the shear center to the centroid along the principal X-axis.

Ro: Polar radius of gyration about the centroidal principal axis.

b: 1-(Xo/Ro)2

Lu: The longest weak axis (Ly) and torsional (Lt) unbraced length at which lateral torsional buckling is restrained in accordance with Section F2.1 of AISI S100-16/S2-20.

**Stud Cross Section**

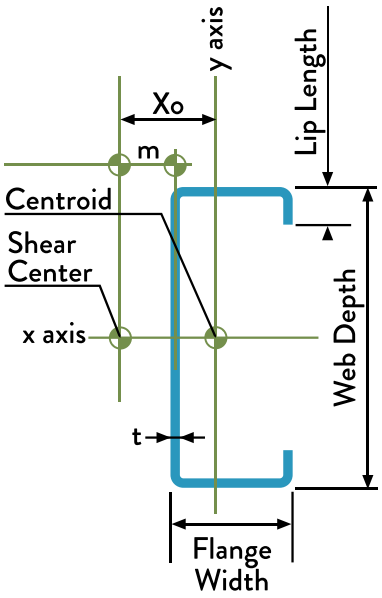


**Track Cross Section**

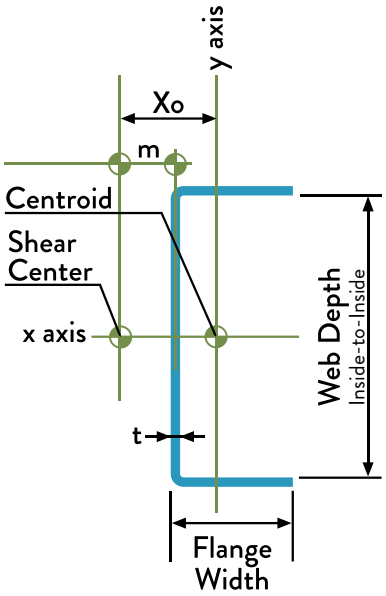

# Section Properties

## Section Properties Table Notes

1. Calculated properties are based on AISI S100-16/S2-20, *North American Specification for Design of Cold-Formed Steel Structural Members*.
2. The centerline bend radius is based upon inside corner radii shown in the Thickness Table (page 3).
3. Effective properties incorporate the strength increase from the cold-work of forming as applicable per AISI A3.3.2.
4. Tabulated gross properties, including torsional properties, are based upon full-unreduced cross section of the studs, away from punchouts.
5. For deflection calculations, use the effective moment of inertia.
6. Allowable moment includes cold-work of forming.
7. For the steels that have both 33 and 50 ksi listing, if the design is based upon 50 ksi, the 50 ksi steel needs to be specified. (ex. 3.625 S137 16-50 (50 ksi))
8. Web depth for track sections is equal to the nominal stud width plus 2 times the design thickness plus the bend radius. Hems on non-structural rack sections are ignored.



# Non-Structural (S) Stud Section Properties

| Member | Design Thickness (in) | Fy (ksi) | Gross Properties | | | | | | | Effective Properties | | | | | | Torsional Properties | | | | | | |
|---|---|---|---|---|---|---|---|---|---|---|---|---|---|---|---|---|---|---|---|---|---|---|
| | | | Area ($in^2$) | Weight (lb/ft) | $I_x$ ($in^4$) | $S_x$ ($in^3$) | $R_x$ (in) | $I_y$ ($in^4$) | $R_y$ (in) | $I_x$ ($in^4$) | $S_x$ ($in^3$) | $M_a$ (in-k) | $M_{ad}$ (in-k) | $Va_g$ (lb) | $Va_{net}$ (lb) | Jx1000 (in4) | $C_w$ ($in^6$) | $X_o$ (in) | m (in) | $R_o$ (in) | β | $L_u$ (in) |
| 162S125-18 | 0.0188 | 33 | 0.080 | 0.27 | 0.038 | 0.046 | 0.686 | 0.016 | 0.447 | 0.034 | 0.031 | 0.62 | 0.58 | 302 | 100 | 0.009 | 0.009 | -1.029 | 0.594 | 1.315 | 0.388 | 29.0 |
| 162S125-27 | 0.0283 | 33 | 0.120 | 0.41 | 0.056 | 0.069 | 0.682 | 0.023 | 0.443 | 0.055 | 0.053 | 1.05 | 0.99 | 494 | 106 | 0.032 | 0.013 | -1.018 | 0.587 | 1.303 | 0.390 | 29.1 |
| 162S125-30 | 0.0312 | 33 | 0.132 | 0.45 | 0.061 | 0.075 | 0.681 | 0.026 | 0.441 | 0.060 | 0.061 | 1.20 | 1.13 | 543 | 106 | 0.043 | 0.014 | -1.014 | 0.585 | 1.299 | 0.390 | 29.2 |
| 162S125-33 | 0.0346 | 33 | 0.145 | 0.49 | 0.067 | 0.083 | 0.679 | 0.028 | 0.440 | 0.066 | 0.070 | 1.38 | 1.28 | 601 | 105 | 0.058 | 0.016 | -1.010 | 0.583 | 1.294 | 0.391 | 29.3 |
| 250S125-18 | 0.0188 | 33 | 0.097 | 0.33 | 0.099 | 0.079 | 1.014 | 0.019 | 0.439 | 0.090 | 0.058 | 1.14 | 0.93 | 258 | 196 | 0.011 | 0.023 | -0.904 | 0.543 | 1.428 | 0.599 | 29.0 |
| 250S125-27 | 0.0283 | 33 | 0.144 | 0.49 | 0.147 | 0.118 | 1.009 | 0.027 | 0.434 | 0.145 | 0.096 | 1.89 | 1.61 | 685 | 354 | 0.039 | 0.034 | -0.893 | 0.537 | 1.416 | 0.602 | 28.9 |
| 250S125-30 | 0.0312 | 33 | 0.159 | 0.54 | 0.161 | 0.129 | 1.008 | 0.030 | 0.433 | 0.159 | 0.108 | 2.14 | 1.84 | 833 | 378 | 0.052 | 0.037 | -0.890 | 0.535 | 1.413 | 0.603 | 28.9 |
| 250S125-33 | 0.0346 | 33 | 0.176 | 0.60 | 0.178 | 0.142 | 1.007 | 0.033 | 0.431 | 0.175 | 0.124 | 2.45 | 2.11 | 975 | 399 | 0.070 | 0.040 | -0.886 | 0.532 | 1.409 | 0.604 | 28.9 |
| 250S125-43 | 0.0451 | 33 | 0.227 | 0.77 | 0.228 | 0.182 | 1.002 | 0.041 | 0.427 | 0.226 | 0.181 | 3.47 | 3.00 | 1266 | 394 | 0.154 | 0.050 | -0.874 | 0.526 | 1.396 | 0.608 | 28.9 |
| 250S125-54 | 0.0566 | 33 | 0.280 | 0.95 | 0.277 | 0.222 | 0.994 | 0.049 | 0.419 | 0.277 | 0.220 | 4.27 | 3.99 | 1553 | 373 | 0.299 | 0.060 | -0.859 | 0.518 | 1.379 | 0.612 | 26.8 |
| 350S125-18 | 0.0188 | 33 | 0.115 | 0.39 | 0.215 | 0.123 | 1.366 | 0.021 | 0.423 | 0.202 | 0.075 | 1.48 | 1.34 | 180 | 159 | 0.014 | 0.050 | -0.798 | 0.495 | 1.638 | 0.763 | 28.8 |
| 350S125-27 | 0.0283 | 33 | 0.173 | 0.59 | 0.320 | 0.183 | 1.361 | 0.030 | 0.419 | 0.315 | 0.135 | 2.67 | 2.37 | 614 | 359 | 0.046 | 0.073 | -0.788 | 0.489 | 1.627 | 0.766 | 28.7 |
| 350S125-30 | 0.0312 | 33 | 0.190 | 0.65 | 0.351 | 0.201 | 1.360 | 0.033 | 0.417 | 0.346 | 0.156 | 3.08 | 2.71 | 824 | 435 | 0.062 | 0.079 | -0.784 | 0.488 | 1.624 | 0.767 | 28.6 |
| 350S125-33 | 0.0346 | 33 | 0.210 | 0.72 | 0.388 | 0.222 | 1.358 | 0.036 | 0.416 | 0.382 | 0.181 | 3.58 | 3.13 | 1024 | 487 | 0.084 | 0.087 | -0.781 | 0.485 | 1.621 | 0.768 | 28.6 |
| 350S125-43 | 0.0451 | 33 | 0.272 | 0.93 | 0.498 | 0.284 | 1.352 | 0.046 | 0.411 | 0.494 | 0.265 | 5.25 | 4.51 | 1740 | 631 | 0.185 | 0.109 | -0.769 | 0.479 | 1.609 | 0.771 | 28.5 |
| 350S125-54 | 0.0566 | 33 | 0.337 | 1.15 | 0.609 | 0.348 | 1.344 | 0.055 | 0.403 | 0.609 | 0.332 | 6.57 | 6.08 | 2253 | 633 | 0.360 | 0.131 | -0.755 | 0.472 | 1.593 | 0.775 | 28.4 |
| 362S125-18 | 0.0188 | 33 | 0.118 | 0.40 | 0.234 | 0.129 | 1.409 | 0.021 | 0.421 | 0.220 | 0.078 | 1.54 | 1.39 | 173 | 163 | 0.014 | 0.054 | -0.786 | 0.490 | 1.667 | 0.778 | 28.8 |
| 362S125-27 | 0.0283 | 33 | 0.176 | 0.60 | 0.347 | 0.192 | 1.404 | 0.031 | 0.416 | 0.342 | 0.141 | 2.78 | 2.47 | 592 | 370 | 0.047 | 0.079 | -0.776 | 0.484 | 1.657 | 0.781 | 28.6 |
| 362S125-30 | 0.0312 | 33 | 0.194 | 0.66 | 0.381 | 0.210 | 1.402 | 0.033 | 0.415 | 0.376 | 0.162 | 3.21 | 2.83 | 793 | 449 | 0.063 | 0.086 | -0.773 | 0.482 | 1.654 | 0.782 | 28.6 |
| 362S125-33 | 0.0346 | 33 | 0.215 | 0.73 | 0.421 | 0.232 | 1.401 | 0.037 | 0.413 | 0.415 | 0.189 | 3.73 | 3.26 | 1024 | 521 | 0.086 | 0.094 | -0.770 | 0.480 | 1.651 | 0.783 | 28.5 |
| 362S125-43 | 0.0451 | 33 | 0.278 | 0.95 | 0.541 | 0.298 | 1.395 | 0.046 | 0.408 | 0.537 | 0.278 | 5.48 | 4.71 | 1740 | 676 | 0.188 | 0.118 | -0.758 | 0.474 | 1.640 | 0.786 | 28.4 |
| 362S125-54 | 0.0566 | 33 | 0.344 | 1.17 | 0.661 | 0.365 | 1.386 | 0.055 | 0.401 | 0.661 | 0.349 | 6.91 | 6.36 | 2341 | 705 | 0.367 | 0.142 | -0.744 | 0.466 | 1.624 | 0.790 | 28.3 |
| 400S125-18[1] | 0.0188 | 33 | 0.125 | 0.42 | 0.294 | 0.147 | 1.536 | 0.021 | 0.415 | 0.279 | 0.087 | 1.43 | 1.29 | 156 | 125 | 0.015 | 0.068 | -0.755 | 0.475 | 1.761 | 0.816 | 28.7 |
| 400S125-27 | 0.0283 | 33 | 0.187 | 0.64 | 0.438 | 0.219 | 1.531 | 0.031 | 0.410 | 0.431 | 0.158 | 3.12 | 2.76 | 533 | 398 | 0.050 | 0.098 | -0.745 | 0.469 | 1.751 | 0.819 | 28.5 |
| 400S125-30 | 0.0312 | 33 | 0.206 | 0.70 | 0.481 | 0.240 | 1.529 | 0.034 | 0.409 | 0.474 | 0.182 | 3.60 | 3.16 | 715 | 484 | 0.067 | 0.108 | -0.742 | 0.467 | 1.748 | 0.820 | 28.5 |
| 400S125-33 | 0.0346 | 33 | 0.228 | 0.77 | 0.531 | 0.265 | 1.527 | 0.038 | 0.407 | 0.524 | 0.213 | 4.20 | 3.66 | 976 | 595 | 0.091 | 0.118 | -0.738 | 0.465 | 1.745 | 0.821 | 28.4 |
| 400S125-43 | 0.0451 | 33 | 0.295 | 1.00 | 0.682 | 0.341 | 1.522 | 0.048 | 0.402 | 0.678 | 0.314 | 6.20 | 5.31 | 1740 | 810 | 0.200 | 0.148 | -0.727 | 0.459 | 1.734 | 0.824 | 28.2 |
| 400S125-54 | 0.0566 | 33 | 0.365 | 1.24 | 0.836 | 0.418 | 1.512 | 0.057 | 0.394 | 0.836 | 0.399 | 7.88 | 7.19 | 2604 | 944 | 0.390 | 0.178 | -0.713 | 0.452 | 1.718 | 0.828 | 28.1 |
| 550S125-18[2] | 0.0188 | 33 | 0.153 | 0.52 | 0.630 | 0.229 | 2.029 | 0.023 | 0.390 | 0.537 | 0.130 | 2.14 | 1.77 | 112 | 89 | 0.018 | 0.141 | -0.651 | 0.423 | 2.166 | 0.910 | 28.2 |
| 550S125-27 | 0.0283 | 33 | 0.229 | 0.78 | 0.939 | 0.341 | 2.023 | 0.034 | 0.385 | 0.900 | 0.238 | 4.70 | 3.89 | 382 | 382 | 0.061 | 0.205 | -0.642 | 0.417 | 2.158 | 0.912 | 27.9 |
| 550S125-30 | 0.0312 | 33 | 0.252 | 0.86 | 1.032 | 0.375 | 2.022 | 0.037 | 0.384 | 0.999 | 0.275 | 5.44 | 4.49 | 512 | 512 | 0.082 | 0.224 | -0.639 | 0.416 | 2.155 | 0.912 | 27.9 |
| 550S125-33 | 0.0346 | 33 | 0.279 | 0.95 | 1.140 | 0.415 | 2.020 | 0.041 | 0.382 | 1.115 | 0.321 | 6.35 | 5.23 | 698 | 698 | 0.112 | 0.246 | -0.636 | 0.414 | 2.152 | 0.913 | 27.8 |
| 550S125-43 | 0.0451 | 33 | 0.362 | 1.23 | 1.469 | 0.534 | 2.013 | 0.052 | 0.377 | 1.460 | 0.492 | 9.72 | 7.71 | 1550 | 1199 | 0.246 | 0.309 | -0.626 | 0.408 | 2.142 | 0.915 | 27.6 |
| 550S125-54 | 0.0566 | 33 | 0.450 | 1.53 | 1.806 | 0.657 | 2.003 | 0.062 | 0.370 | 1.805 | 0.641 | 12.66 | 10.63 | 2740 | 1666 | 0.481 | 0.374 | -0.613 | 0.401 | 2.127 | 0.917 | 27.3 |
| 600S125-18[2] | 0.0188 | 33 | 0.162 | 0.55 | 0.779 | 0.260 | 2.190 | 0.024 | 0.382 | 0.652 | 0.142 | 2.35 | 1.92 | 102 | 82 | 0.019 | 0.172 | -0.623 | 0.408 | 2.308 | 0.927 | 28.0 |
| 600S125-27[1] | 0.0283 | 33 | 0.243 | 0.83 | 1.161 | 0.387 | 2.184 | 0.035 | 0.378 | 1.100 | 0.262 | 4.33 | 3.54 | 349 | 279 | 0.065 | 0.251 | -0.614 | 0.403 | 2.300 | 0.929 | 27.7 |
| 600S125-30 | 0.0312 | 33 | 0.268 | 0.91 | 1.276 | 0.425 | 2.182 | 0.038 | 0.376 | 1.222 | 0.304 | 6.00 | 4.91 | 468 | 468 | 0.087 | 0.274 | -0.611 | 0.401 | 2.297 | 0.929 | 27.7 |
| 600S125-33 | 0.0346 | 33 | 0.297 | 1.01 | 1.410 | 0.470 | 2.180 | 0.042 | 0.375 | 1.366 | 0.355 | 7.01 | 5.73 | 638 | 638 | 0.118 | 0.300 | -0.608 | 0.399 | 2.294 | 0.930 | 27.6 |
| 600S125-43 | 0.0451 | 33 | 0.385 | 1.31 | 1.818 | 0.606 | 2.173 | 0.053 | 0.370 | 1.810 | 0.544 | 10.75 | 8.50 | 1415 | 1240 | 0.261 | 0.379 | -0.598 | 0.393 | 2.284 | 0.931 | 27.3 |
| 600S125-54 | 0.0566 | 33 | 0.479 | 1.63 | 2.237 | 0.746 | 2.162 | 0.063 | 0.362 | 2.236 | 0.720 | 14.24 | 11.77 | 2740 | 1890 | 0.511 | 0.457 | -0.586 | 0.386 | 2.269 | 0.933 | 27.1 |
| 800S125-33[1] | 0.0346 | 33 | 0.366 | 1.24 | 2.883 | 0.721 | 2.807 | 0.044 | 0.347 | 2.666 | 0.492 | 8.11 | 6.28 | 474 | 379 | 0.146 | 0.583 | -0.519 | 0.350 | 2.875 | 0.967 | 26.6 |
| 800S125-43 | 0.0451 | 33 | 0.475 | 1.62 | 3.723 | 0.931 | 2.799 | 0.056 | 0.342 | 3.605 | 0.750 | 14.82 | 11.36 | 1051 | 1051 | 0.322 | 0.735 | -0.510 | 0.344 | 2.866 | 0.968 | 26.4 |
| 800S125-54 | 0.0566 | 33 | 0.592 | 2.01 | 4.596 | 1.149 | 2.787 | 0.066 | 0.335 | 4.571 | 1.018 | 20.12 | 16.01 | 2091 | 2091 | 0.632 | 0.890 | -0.500 | 0.338 | 2.851 | 0.969 | 26.0 |

**1** Web-height to thickness ratio exceeds 200. Web Stiffeners are required at all support points and concentrated loads.

**2** When web height-to thickness ratio exceeds 260, or flange width-to-thickness rato exceeds 60, effective properties are not calculated (limitations in AISI Section B4.1).

See Section Properties Table Notes

# Structural (S) Stud Section Properties

| Member | Design Thickness (in) | Fy (ksi) | Gross Properties | | | | | | | Effective Properties | | | | | | Torsional Properties | | | | | | |
|---|---|---|---|---|---|---|---|---|---|---|---|---|---|---|---|---|---|---|---|---|---|---|
| | | | Area ($in^2$) | Weight (lb/ft) | $I_x$ ($in^4$) | $S_x$ ($in^3$) | $R_x$ (in) | $I_y$ ($in^4$) | $R_y$ (in) | $I_x$ ($in^4$) | $S_x$ ($in^3$) | $M_a$ (in-k) | $M_{ad}$ (in-k) | $Va_g$ (lb) | $Va_{net}$ (lb) | Jx1000 (in4) | $C_w$ (in6) | $X_o$ (in) | m (in) | $R_o$ (in) | β | $L_u$ (in) |
| 250S137-33 | 0.0346 | 33 | 0.197 | 0.67 | 0.203 | 0.163 | 1.015 | 0.052 | 0.515 | 0.203 | 0.157 | 3.09 | 2.91 | 975 | 399 | 0.079 | 0.076 | -1.141 | 0.677 | 1.612 | 0.499 | 35.6 |
| 250S137-43 | 0.0451 | 33 | 0.255 | 0.87 | 0.261 | 0.208 | 1.011 | 0.067 | 0.511 | 0.261 | 0.207 | 4.25 | 4.14 | 1266 | 394 | 0.173 | 0.096 | -1.129 | 0.670 | 1.599 | 0.501 | 33.6 |
| 250S137-54 | 0.0566 | 33 | 0.316 | 1.07 | 0.318 | 0.255 | 1.004 | 0.080 | 0.504 | 0.318 | 0.253 | 5.72 | 5.71 | 1553 | 373 | 0.337 | 0.115 | -1.115 | 0.663 | 1.583 | 0.504 | 33.4 |
| 250S137-54 | 0.0566 | 50 | 0.316 | 1.07 | 0.318 | 0.255 | 1.004 | 0.080 | 0.504 | 0.318 | 0.246 | 7.38 | 7.09 | 2353 | 565 | 0.337 | 0.115 | -1.115 | 0.663 | 1.583 | 0.504 | 27.1 |
| 250S137-68 | 0.0713 | 50 | 0.390 | 1.33 | 0.386 | 0.309 | 0.995 | 0.096 | 0.495 | 0.386 | 0.307 | 10.62 | 10.22 | 2866 | 519 | 0.661 | 0.138 | -1.096 | 0.653 | 1.561 | 0.507 | 26.8 |
| 250S162-33 | 0.0346 | 33 | 0.223 | 0.76 | 0.235 | 0.188 | 1.027 | 0.087 | 0.624 | 0.235 | 0.179 | 3.54 | 3.41 | 975 | 399 | 0.089 | 0.146 | -1.470 | 0.859 | 1.898 | 0.401 | 44.1 |
| 250S162-43 | 0.0451 | 33 | 0.289 | 0.98 | 0.302 | 0.242 | 1.022 | 0.111 | 0.620 | 0.302 | 0.24 | 5.15 | 5.01 | 1266 | 394 | 0.196 | 0.184 | -1.457 | 0.852 | 1.885 | 0.402 | 42.1 |
| 250S162-54 | 0.0566 | 33 | 0.358 | 1.22 | 0.370 | 0.296 | 1.016 | 0.135 | 0.613 | 0.370 | 0.294 | 6.53 | 6.53 | 1553 | 373 | 0.383 | 0.223 | -1.443 | 0.845 | 1.868 | 0.404 | 41.8 |
| 250S162-54 | 0.0566 | 50 | 0.358 | 1.22 | 0.370 | 0.296 | 1.016 | 0.135 | 0.613 | 0.370 | 0.287 | 8.60 | 8.32 | 2353 | 565 | 0.383 | 0.223 | -1.443 | 0.845 | 1.868 | 0.404 | 33.9 |
| 250S162-68 | 0.0713 | 50 | 0.443 | 1.51 | 0.450 | 0.360 | 1.008 | 0.162 | 0.605 | 0.451 | 0.358 | 11.97 | 11.73 | 2866 | 519 | 0.752 | 0.268 | -1.424 | 0.835 | 1.847 | 0.405 | 33.7 |
| 350S162-33 | 0.0346 | 33 | 0.258 | 0.88 | 0.508 | 0.291 | 1.404 | 0.098 | 0.617 | 0.508 | 0.264 | 5.22 | 4.99 | 1024 | 487 | 0.103 | 0.277 | -1.324 | 0.796 | 2.026 | 0.573 | 42.7 |
| 350S162-43 | 0.0451 | 33 | 0.334 | 1.14 | 0.655 | 0.374 | 1.400 | 0.125 | 0.612 | 0.655 | 0.364 | 7.18 | 6.68 | 1740 | 631 | 0.227 | 0.350 | -1.312 | 0.789 | 2.014 | 0.575 | 42.6 |
| 350S162-54 | 0.0566 | 33 | 0.415 | 1.41 | 0.805 | 0.460 | 1.393 | 0.152 | 0.606 | 0.805 | 0.451 | 10.01 | 9.82 | 2253 | 633 | 0.443 | 0.426 | -1.298 | 0.782 | 1.998 | 0.578 | 42.7 |
| 350S162-54 | 0.0566 | 50 | 0.415 | 1.41 | 0.805 | 0.460 | 1.393 | 0.152 | 0.606 | 0.805 | 0.435 | 13.02 | 12.35 | 3372 | 947 | 0.443 | 0.426 | -1.298 | 0.782 | 1.998 | 0.578 | 34.5 |
| 350S162-68 | 0.0713 | 50 | 0.515 | 1.75 | 0.985 | 0.563 | 1.383 | 0.184 | 0.597 | 0.985 | 0.551 | 18.26 | 17.49 | 4203 | 897 | 0.872 | 0.514 | -1.280 | 0.772 | 1.977 | 0.581 | 34.5 |
| 350S162-97 | 0.1017 | 50 | 0.711 | 2.42 | 1.321 | 0.755 | 1.363 | 0.238 | 0.579 | 1.322 | 0.739 | 26.22 | 26.15 | 5705 | 775 | 2.452 | 0.672 | -1.242 | 0.752 | 1.932 | 0.587 | 34.7 |
| 350S200-43 | 0.0451 | 33 | 0.379 | 1.29 | 0.771 | 0.441 | 1.426 | 0.224 | 0.768 | 0.771 | 0.418 | 8.25 | 8.08 | 1740 | 631 | 0.257 | 0.687 | -1.748 | 1.032 | 2.383 | 0.462 | 53.7 |
| 350S200-54 | 0.0566 | 33 | 0.471 | 1.60 | 0.950 | 0.543 | 1.420 | 0.274 | 0.762 | 0.950 | 0.534 | 11.62 | 11.37 | 2253 | 633 | 0.503 | 0.838 | -1.733 | 1.024 | 2.367 | 0.464 | 53.8 |
| 350S200-54 | 0.0566 | 50 | 0.471 | 1.60 | 0.950 | 0.543 | 1.420 | 0.274 | 0.762 | 0.950 | 0.481 | 14.40 | 14.26 | 3372 | 947 | 0.503 | 0.838 | -1.733 | 1.024 | 2.367 | 0.464 | 43.5 |
| 350S200-68 | 0.0713 | 50 | 0.586 | 1.99 | 1.167 | 0.667 | 1.411 | 0.333 | 0.754 | 1.168 | 0.643 | 19.25 | 18.87 | 4203 | 897 | 0.993 | 1.018 | -1.715 | 1.014 | 2.345 | 0.465 | 43.5 |
| 350S200-97 | 0.1017 | 50 | 0.813 | 2.77 | 1.577 | 0.901 | 1.393 | 0.440 | 0.736 | 1.578 | 0.886 | 30.55 | 30.35 | 5705 | 775 | 2.803 | 1.347 | -1.676 | 0.994 | 2.300 | 0.469 | 43.9 |
| 362S137-33 | 0.0346 | 33 | 0.236 | 0.80 | 0.479 | 0.264 | 1.424 | 0.059 | 0.501 | 0.479 | 0.239 | 4.73 | 4.45 | 1024 | 521 | 0.094 | 0.165 | -1.003 | 0.615 | 1.813 | 0.694 | 34.7 |
| 362S137-43 | 0.0451 | 33 | 0.306 | 1.04 | 0.616 | 0.340 | 1.419 | 0.075 | 0.497 | 0.616 | 0.328 | 6.48 | 6.20 | 1740 | 676 | 0.207 | 0.208 | -0.991 | 0.608 | 1.801 | 0.697 | 34.6 |
| 362S137-54 | 0.0566 | 33 | 0.379 | 1.29 | 0.756 | 0.417 | 1.412 | 0.091 | 0.490 | 0.756 | 0.408 | 8.87 | 8.44 | 2341 | 705 | 0.405 | 0.251 | -0.978 | 0.601 | 1.786 | 0.700 | 34.6 |
| 362S137-54 | 0.0566 | 50 | 0.379 | 1.29 | 0.756 | 0.417 | 1.412 | 0.091 | 0.490 | 0.756 | 0.392 | 11.73 | 11.05 | 3372 | 1016 | 0.405 | 0.251 | -0.978 | 0.601 | 1.786 | 0.700 | 27.9 |
| 362S137-68 | 0.0713 | 50 | 0.470 | 1.60 | 0.923 | 0.509 | 1.401 | 0.109 | 0.481 | 0.923 | 0.498 | 17.23 | 16.15 | 4370 | 1004 | 0.797 | 0.302 | -0.959 | 0.592 | 1.765 | 0.704 | 27.8 |
| 362S162-33 | 0.0346 | 33 | 0.262 | 0.89 | 0.551 | 0.304 | 1.450 | 0.099 | 0.616 | 0.551 | 0.275 | 5.44 | 5.20 | 1024 | 521 | 0.105 | 0.297 | -1.308 | 0.789 | 2.048 | 0.592 | 42.6 |
| 362S162-43 | 0.0451 | 33 | 0.340 | 1.16 | 0.710 | 0.392 | 1.445 | 0.127 | 0.611 | 0.710 | 0.380 | 7.50 | 7.00 | 1740 | 676 | 0.230 | 0.376 | -1.297 | 0.782 | 2.036 | 0.594 | 42.5 |
| 362S162-54 | 0.0566 | 33 | 0.422 | 1.44 | 0.873 | 0.482 | 1.438 | 0.154 | 0.605 | 0.873 | 0.473 | 10.27 | 9.94 | 2341 | 705 | 0.451 | 0.457 | -1.283 | 0.774 | 2.020 | 0.597 | 42.5 |
| 362S162-54 | 0.0566 | 50 | 0.422 | 1.44 | 0.873 | 0.482 | 1.438 | 0.154 | 0.605 | 0.873 | 0.454 | 13.60 | 12.87 | 3372 | 1016 | 0.451 | 0.457 | -1.283 | 0.774 | 2.020 | 0.597 | 34.4 |
| 362S162-68 | 0.0713 | 50 | 0.524 | 1.78 | 1.069 | 0.590 | 1.429 | 0.186 | 0.596 | 1.069 | 0.579 | 19.16 | 18.24 | 4370 | 1004 | 0.887 | 0.552 | -1.264 | 0.765 | 1.999 | 0.600 | 34.4 |
| 362S162-97 | 0.1017 | 50 | 0.724 | 2.46 | 1.436 | 0.792 | 1.408 | 0.241 | 0.577 | 1.437 | 0.777 | 27.56 | 27.47 | 5943 | 875 | 2.496 | 0.723 | -1.226 | 0.745 | 1.954 | 0.606 | 34.5 |
| 362S200-33 | 0.0346 | 33 | 0.297 | 1.01 | 0.648 | 0.358 | 1.478 | 0.177 | 0.772 | 0.646 | 0.301 | 5.96 | 5.98 | 1024 | 521 | 0.118 | 0.577 | -1.741 | 1.030 | 2.411 | 0.478 | 53.6 |
| 362S200-43 | 0.0451 | 33 | 0.385 | 1.31 | 0.836 | 0.461 | 1.474 | 0.227 | 0.767 | 0.836 | 0.436 | 8.62 | 8.41 | 1740 | 676 | 0.261 | 0.734 | -1.729 | 1.024 | 2.398 | 0.480 | 53.5 |
| 362S200-54 | 0.0566 | 33 | 0.479 | 1.63 | 1.030 | 0.568 | 1.467 | 0.277 | 0.761 | 1.030 | 0.560 | 12.16 | 11.87 | 2341 | 705 | 0.511 | 0.896 | -1.715 | 1.016 | 2.382 | 0.482 | 53.6 |
| 362S200-54 | 0.0566 | 50 | 0.479 | 1.63 | 1.030 | 0.568 | 1.467 | 0.277 | 0.761 | 1.030 | 0.502 | 15.03 | 14.84 | 3372 | 1016 | 0.511 | 0.896 | -1.715 | 1.016 | 2.382 | 0.482 | 43.3 |
| 362S200-68 | 0.0713 | 50 | 0.595 | 2.02 | 1.266 | 0.698 | 1.458 | 0.337 | 0.753 | 1.266 | 0.674 | 20.18 | 19.67 | 4370 | 1004 | 1.008 | 1.089 | -1.696 | 1.006 | 2.360 | 0.484 | 43.3 |
| 362S200-97 | 0.1017 | 50 | 0.826 | 2.81 | 1.712 | 0.945 | 1.440 | 0.446 | 0.735 | 1.713 | 0.929 | 32.07 | 31.84 | 5943 | 875 | 2.847 | 1.441 | -1.658 | 0.986 | 2.316 | 0.487 | 43.6 |
| 362S250-43 | 0.0451 | 33 | 0.430 | 1.46 | 0.980 | 0.541 | 1.510 | 0.385 | 0.946 | 0.980 | 0.459 | 9.07 | 9.06 | 1740 | 676 | 0.292 | 1.230 | -2.199 | 1.277 | 2.830 | 0.396 | 64.1 |
| 362S250-54 | 0.0566 | 33 | 0.535 | 1.82 | 1.210 | 0.668 | 1.504 | 0.473 | 0.940 | 1.211 | 0.592 | 11.69 | 12.06 | 2341 | 705 | 0.571 | 1.506 | -2.184 | 1.269 | 2.813 | 0.397 | 64.3 |
| 362S250-54 | 0.0566 | 50 | 0.535 | 1.82 | 1.210 | 0.668 | 1.504 | 0.473 | 0.940 | 1.204 | 0.526 | 15.74 | 15.93 | 3372 | 1016 | 0.571 | 1.506 | -2.184 | 1.269 | 2.813 | 0.397 | 52.0 |
| 362S250-68 | 0.0713 | 50 | 0.666 | 2.27 | 1.491 | 0.823 | 1.496 | 0.578 | 0.931 | 1.491 | 0.700 | 20.94 | 22.30 | 4370 | 1004 | 1.129 | 1.837 | -2.165 | 1.259 | 2.791 | 0.398 | 52.0 |
| 362S250-97 | 0.1017 | 50 | 0.927 | 3.16 | 2.028 | 1.119 | 1.479 | 0.773 | 0.913 | 2.029 | 1.059 | 31.71 | 32.47 | 5943 | 875 | 3.197 | 2.452 | -2.126 | 1.239 | 2.746 | 0.401 | 52.5 |
| 362S300-33[2] | 0.0346 | 33 | 0.366 | 1.24 | 0.871 | 0.481 | 1.543 | 0.463 | 1.125 | - | - | - | - | - | - | 0.146 | 1.478 | -2.686 | 1.537 | 3.296 | 0.336 | 74.3 |
| 362S300-43[2] | 0.0451 | 33 | 0.475 | 1.62 | 1.125 | 0.621 | 1.539 | 0.596 | 1.120 | - | - | - | - | - | - | 0.322 | 1.888 | -2.674 | 1.530 | 3.282 | 0.336 | 74.3 |
| 362S300-54 | 0.0566 | 33 | 0.592 | 2.01 | 1.391 | 0.767 | 1.533 | 0.734 | 1.114 | 1.383 | 0.617 | 12.19 | 12.82 | 2341 | 705 | 0.632 | 2.316 | -2.659 | 1.522 | 3.265 | 0.337 | 74.5 |
| 362S300-54 | 0.0566 | 50 | 0.592 | 2.01 | 1.391 | 0.767 | 1.533 | 0.734 | 1.114 | 1.311 | 0.540 | 16.18 | 16.75 | 3372 | 1016 | 0.632 | 2.316 | -2.659 | 1.522 | 3.265 | 0.337 | 60.2 |
| 362S300-68 | 0.0713 | 50 | 0.738 | 2.51 | 1.716 | 0.947 | 1.525 | 0.900 | 1.105 | 1.685 | 0.726 | 21.74 | 22.59 | 4370 | 1004 | 1.250 | 2.833 | -2.640 | 1.512 | 3.243 | 0.337 | 60.4 |
| 362S300-97 | 0.1017 | 50 | 1.029 | 3.50 | 2.343 | 1.293 | 1.509 | 1.213 | 1.086 | 2.325 | 1.161 | 34.77 | 35.10 | 5943 | 875 | 3.548 | 3.803 | -2.600 | 1.491 | 3.196 | 0.338 | 60.9 |
| 400S137-33 | 0.0346 | 33 | 0.249 | 0.85 | 0.603 | 0.302 | 1.556 | 0.061 | 0.496 | 0.603 | 0.269 | 5.31 | 4.98 | 976 | 595 | 0.099 | 0.204 | -0.965 | 0.597 | 1.897 | 0.741 | 34.5 |
| 400S137-43 | 0.0451 | 33 | 0.323 | 1.10 | 0.776 | 0.388 | 1.551 | 0.078 | 0.491 | 0.776 | 0.371 | 7.32 | 7.08 | 1740 | 810 | 0.219 | 0.257 | -0.954 | 0.591 | 1.886 | 0.744 | 34.3 |
| 400S137-54 | 0.0566 | 33 | 0.401 | 1.36 | 0.953 | 0.477 | 1.543 | 0.094 | 0.484 | 0.953 | 0.465 | 9.19 | 8.44 | 2604 | 944 | 0.428 | 0.311 | -0.940 | 0.583 | 1.870 | 0.747 | 34.3 |
| 400S137-54 | 0.0566 | 50 | 0.401 | 1.36 | 0.953 | 0.477 | 1.543 | 0.094 | 0.484 | 0.953 | 0.443 | 13.27 | 12.42 | 3372 | 1223 | 0.428 | 0.311 | -0.940 | 0.583 | 1.870 | 0.747 | 27.7 |
| 400S137-68 | 0.0713 | 50 | 0.497 | 1.69 | 1.165 | 0.583 | 1.531 | 0.112 | 0.475 | 1.166 | 0.571 | 17.10 | 15.28 | 4871 | 1356 | 0.842 | 0.375 | -0.922 | 0.574 | 1.850 | 0.751 | 27.6 |

**1** Web-height to thickness ratio exceeds 200. Web Stiffeners are required at all support points and concentrated loads.

**2** When web height-to thickness ratio exceeds 260, or flange width-to-thickness rato exceeds 60, effective properties are not calculated (limitations in AISI Section B4.1).

See Section Properties Table Notes

# Structural (S) Stud Section Properties

| Member | Design Thickness (in) | Fy (ksi) | Gross Properties | | | | | | | Effective Properties | | | | | | Torsional Properties | | | | | | |
|---|---|---|---|---|---|---|---|---|---|---|---|---|---|---|---|---|---|---|---|---|---|---|
| | | | Area ($in^2$) | Weight (lb/ft) | $I_x$ ($in^4$) | $S_x$ ($in^3$) | $R_x$ (in) | $I_y$ ($in^4$) | $R_y$ (in) | $I_x$ ($in^4$) | $S_x$ ($in^3$) | $M_a$ (in-k) | $M_{ad}$ (in-k) | $Va_g$ (lb)[1] | $Va_{net}$ (lb)[1] | Jx1000 (in4) | $C_w$ (in6) | $X_o$ (in) | m (in) | $R_o$ (in) | β | $L_u$ (in) |
| 400S162-33 | 0.0346 | 33 | 0.275 | 0.94 | 0.692 | 0.346 | 1.586 | 0.103 | 0.611 | 0.692 | 0.309 | 6.11 | 5.81 | 976 | 595 | 0.110 | 0.363 | -1.263 | 0.768 | 2.118 | 0.644 | 42.3 |
| 400S162-43 | 0.0451 | 33 | 0.357 | 1.21 | 0.892 | 0.446 | 1.581 | 0.131 | 0.606 | 0.892 | 0.428 | 8.47 | 7.96 | 1740 | 810 | 0.242 | 0.460 | -1.252 | 0.761 | 2.106 | 0.647 | 42.2 |
| 400S162-54 | 0.0566 | 33 | 0.443 | 1.51 | 1.098 | 0.549 | 1.574 | 0.159 | 0.600 | 1.098 | 0.538 | 10.62 | 9.86 | 2604 | 944 | 0.473 | 0.560 | -1.238 | 0.754 | 2.090 | 0.649 | 42.2 |
| 400S162-54 | 0.0566 | 50 | 0.443 | 1.51 | 1.098 | 0.549 | 1.574 | 0.159 | 0.600 | 1.098 | 0.513 | 15.35 | 14.44 | 3372 | 1223 | 0.473 | 0.560 | -1.238 | 0.754 | 2.090 | 0.649 | 34.1 |
| 400S162-68 | 0.0713 | 50 | 0.550 | 1.87 | 1.346 | 0.673 | 1.564 | 0.192 | 0.591 | 1.347 | 0.662 | 19.81 | 18.13 | 4871 | 1356 | 0.933 | 0.677 | -1.220 | 0.745 | 2.069 | 0.653 | 34.0 |
| 400S162-97 | 0.1017 | 50 | 0.762 | 2.59 | 1.813 | 0.907 | 1.542 | 0.250 | 0.572 | 1.815 | 0.893 | 31.68 | 31.53 | 6658 | 1207 | 2.628 | 0.889 | -1.182 | 0.725 | 2.026 | 0.660 | 34.1 |
| 400S200-33 | 0.0346 | 33 | 0.310 | 1.05 | 0.812 | 0.406 | 1.619 | 0.183 | 0.769 | 0.810 | 0.338 | 6.69 | 6.67 | 976 | 595 | 0.124 | 0.697 | -1.688 | 1.007 | 2.462 | 0.530 | 53.1 |
| 400S200-43 | 0.0451 | 33 | 0.402 | 1.37 | 1.048 | 0.524 | 1.615 | 0.235 | 0.764 | 1.048 | 0.491 | 9.71 | 9.41 | 1740 | 810 | 0.272 | 0.886 | -1.676 | 1.000 | 2.450 | 0.532 | 53.0 |
| 400S200-54 | 0.0566 | 33 | 0.500 | 1.70 | 1.292 | 0.646 | 1.608 | 0.287 | 0.758 | 1.292 | 0.635 | 12.54 | 11.67 | 2603 | 944 | 0.534 | 1.083 | -1.662 | 0.993 | 2.433 | 0.534 | 53.0 |
| 400S200-54 | 0.0566 | 50 | 0.500 | 1.70 | 1.292 | 0.646 | 1.608 | 0.287 | 0.758 | 1.292 | 0.566 | 16.94 | 16.61 | 3372 | 1223 | 0.534 | 1.083 | -1.662 | 0.993 | 2.433 | 0.534 | 42.9 |
| 400S200-68 | 0.0713 | 50 | 0.622 | 2.12 | 1.590 | 0.795 | 1.599 | 0.349 | 0.750 | 1.590 | 0.767 | 22.96 | 22.08 | 4871 | 1356 | 1.054 | 1.318 | -1.643 | 0.983 | 2.412 | 0.536 | 42.9 |
| 400S200-97 | 0.1017 | 50 | 0.864 | 2.94 | 2.156 | 1.078 | 1.580 | 0.463 | 0.732 | 2.157 | 1.064 | 36.71 | 36.38 | 6658 | 1207 | 2.978 | 1.749 | -1.605 | 0.963 | 2.368 | 0.541 | 43.1 |
| 400S250-33[2] | 0.0346 | 33 | 0.344 | 1.17 | 0.948 | 0.474 | 1.660 | 0.310 | 0.949 | - | - | - | - | - | - | 0.137 | 1.165 | -2.151 | 1.259 | 2.878 | 0.441 | 63.7 |
| 400S250-43 | 0.0451 | 33 | 0.447 | 1.52 | 1.224 | 0.612 | 1.655 | 0.399 | 0.945 | 1.224 | 0.516 | 10.19 | 10.09 | 1740 | 810 | 0.303 | 1.486 | -2.139 | 1.252 | 2.865 | 0.443 | 63.7 |
| 400S250-54 | 0.0566 | 33 | 0.556 | 1.89 | 1.512 | 0.756 | 1.649 | 0.490 | 0.938 | 1.512 | 0.668 | 13.19 | 13.47 | 2603 | 944 | 0.594 | 1.821 | -2.124 | 1.244 | 2.848 | 0.444 | 63.8 |
| 400S250-54 | 0.0566 | 50 | 0.556 | 1.89 | 1.512 | 0.756 | 1.649 | 0.490 | 0.938 | 1.505 | 0.592 | 17.71 | 17.74 | 3372 | 1223 | 0.594 | 1.821 | -2.124 | 1.244 | 2.848 | 0.444 | 51.6 |
| 400S250-68 | 0.0713 | 50 | 0.693 | 2.36 | 1.865 | 0.932 | 1.640 | 0.599 | 0.929 | 1.865 | 0.793 | 23.75 | 23.81 | 4871 | 1356 | 1.174 | 2.225 | -2.105 | 1.235 | 2.826 | 0.445 | 51.6 |
| 400S250-97 | 0.1017 | 50 | 0.966 | 3.28 | 2.542 | 1.271 | 1.623 | 0.801 | 0.911 | 2.543 | 1.206 | 36.10 | 36.64 | 6658 | 1207 | 3.329 | 2.978 | -2.066 | 1.214 | 2.781 | 0.448 | 51.9 |
| 400S300-33[2] | 0.0346 | 33 | 0.379 | 1.29 | 1.084 | 0.542 | 1.692 | 0.479 | 1.125 | - | - | - | - | - | - | 0.151 | 1.786 | -2.621 | 1.510 | 3.316 | 0.375 | 73.9 |
| 400S300-43[2] | 0.0451 | 33 | 0.492 | 1.67 | 1.400 | 0.700 | 1.687 | 0.617 | 1.120 | - | - | - | - | - | - | 0.334 | 2.282 | -2.608 | 1.503 | 3.302 | 0.376 | 73.9 |
| 400S300-54 | 0.0566 | 33 | 0.613 | 2.09 | 1.732 | 0.866 | 1.681 | 0.760 | 1.114 | 1.723 | 0.695 | 13.74 | 14.25 | 2603 | 944 | 0.655 | 2.802 | -2.594 | 1.496 | 3.285 | 0.377 | 74.0 |
| 400S300-54 | 0.0566 | 50 | 0.613 | 2.09 | 1.732 | 0.866 | 1.681 | 0.760 | 1.114 | 1.634 | 0.608 | 18.19 | 18.59 | 3372 | 1223 | 0.655 | 2.802 | -2.594 | 1.496 | 3.285 | 0.377 | 59.9 |
| 400S300-68 | 0.0713 | 50 | 0.764 | 2.60 | 2.140 | 1.070 | 1.673 | 0.933 | 1.105 | 2.099 | 0.822 | 24.62 | 25.13 | 4871 | 1356 | 1.295 | 3.432 | -2.574 | 1.486 | 3.263 | 0.378 | 60.0 |
| 400S300-97 | 0.1017 | 50 | 1.067 | 3.63 | 2.928 | 1.464 | 1.656 | 1.259 | 1.086 | 2.903 | 1.318 | 39.46 | 39.25 | 6658 | 1207 | 3.679 | 4.619 | -2.535 | 1.465 | 3.217 | 0.379 | 60.3 |
| 550S162-33 | 0.0346 | 33 | 0.327 | 1.11 | 1.459 | 0.530 | 2.112 | 0.113 | 0.589 | 1.459 | 0.508 | 10.03 | 8.28 | 698 | 698 | 0.130 | 0.713 | -1.114 | 0.697 | 2.459 | 0.795 | 41.4 |
| 550S162-43 | 0.0451 | 33 | 0.424 | 1.44 | 1.884 | 0.685 | 2.107 | 0.145 | 0.584 | 1.883 | 0.680 | 14.44 | 12.37 | 1550 | 1199 | 0.288 | 0.905 | -1.103 | 0.691 | 2.449 | 0.797 | 41.2 |
| 550S162-54 | 0.0566 | 33 | 0.528 | 1.80 | 2.325 | 0.845 | 2.098 | 0.176 | 0.577 | 2.325 | 0.840 | 18.64 | 17.07 | 2740 | 1666 | 0.564 | 1.105 | -1.090 | 0.684 | 2.434 | 0.800 | 41.0 |
| 550S162-54 | 0.0566 | 50 | 0.528 | 1.80 | 2.325 | 0.845 | 2.098 | 0.176 | 0.577 | 2.325 | 0.815 | 24.41 | 20.87 | 3093 | 1881 | 0.564 | 1.105 | -1.090 | 0.684 | 2.434 | 0.800 | 33.2 |
| 550S162-68 | 0.0713 | 50 | 0.657 | 2.24 | 2.862 | 1.041 | 2.087 | 0.212 | 0.569 | 2.862 | 1.034 | 33.97 | 29.87 | 5352 | 2532 | 1.114 | 1.342 | -1.072 | 0.675 | 2.414 | 0.803 | 33.1 |
| 550S162-97 | 0.1017 | 50 | 0.915 | 3.11 | 3.887 | 1.414 | 2.062 | 0.276 | 0.550 | 3.889 | 1.404 | 49.79 | 48.69 | 9518 | 3026 | 3.154 | 1.775 | -1.037 | 0.656 | 2.372 | 0.809 | 32.8 |
| 550S200-33 | 0.0346 | 33 | 0.362 | 1.23 | 1.694 | 0.616 | 2.164 | 0.204 | 0.751 | 1.680 | 0.553 | 10.92 | 9.49 | 698 | 698 | 0.144 | 1.326 | -1.508 | 0.925 | 2.743 | 0.698 | 51.9 |
| 550S200-43 | 0.0451 | 33 | 0.469 | 1.60 | 2.189 | 0.796 | 2.159 | 0.261 | 0.746 | 2.189 | 0.772 | 15.25 | 13.50 | 1550 | 1199 | 0.318 | 1.691 | -1.496 | 0.918 | 2.731 | 0.700 | 51.7 |
| 550S200-54 | 0.0566 | 33 | 0.585 | 1.99 | 2.707 | 0.984 | 2.152 | 0.320 | 0.739 | 2.707 | 0.979 | 21.29 | 19.28 | 2740 | 1666 | 0.624 | 2.072 | -1.483 | 0.911 | 2.716 | 0.702 | 51.6 |
| 550S200-54 | 0.0566 | 50 | 0.585 | 1.99 | 2.707 | 0.984 | 2.152 | 0.320 | 0.739 | 2.707 | 0.893 | 26.74 | 23.86 | 3093 | 1881 | 0.624 | 2.072 | -1.483 | 0.911 | 2.716 | 0.702 | 41.8 |
| 550S200-68 | 0.0713 | 50 | 0.729 | 2.48 | 3.341 | 1.215 | 2.141 | 0.389 | 0.731 | 3.341 | 1.182 | 35.39 | 32.07 | 5352 | 2532 | 1.235 | 2.531 | -1.465 | 0.902 | 2.695 | 0.705 | 41.7 |
| 550S200-97 | 0.1017 | 50 | 1.016 | 3.46 | 4.565 | 1.660 | 2.119 | 0.516 | 0.713 | 4.566 | 1.650 | 56.92 | 54.74 | 9518 | 3026 | 3.504 | 3.384 | -1.428 | 0.882 | 2.653 | 0.710 | 41.5 |
| 600S137-33 | 0.0346 | 33 | 0.318 | 1.08 | 1.583 | 0.528 | 2.230 | 0.069 | 0.464 | 1.551 | 0.442 | 8.73 | 7.76 | 638 | 638 | 0.127 | 0.500 | -0.807 | 0.519 | 2.416 | 0.889 | 33.5 |
| 600S137-43 | 0.0451 | 33 | 0.413 | 1.41 | 2.042 | 0.681 | 2.224 | 0.087 | 0.459 | 2.042 | 0.635 | 12.56 | 11.17 | 1415 | 1240 | 0.280 | 0.633 | -0.796 | 0.513 | 2.406 | 0.890 | 33.3 |
| 600S137-54 | 0.0566 | 33 | 0.514 | 1.75 | 2.518 | 0.839 | 2.214 | 0.105 | 0.452 | 2.518 | 0.826 | 16.33 | 15.05 | 2740 | 1890 | 0.549 | 0.769 | -0.784 | 0.506 | 2.392 | 0.893 | 33.0 |
| 600S137-54 | 0.0566 | 50 | 0.514 | 1.75 | 2.518 | 0.839 | 2.214 | 0.105 | 0.452 | 2.518 | 0.765 | 22.90 | 19.85 | 2822 | 1947 | 0.549 | 0.769 | -0.784 | 0.506 | 2.392 | 0.893 | 26.8 |
| 600S137-68 | 0.0713 | 50 | 0.640 | 2.18 | 3.095 | 1.032 | 2.200 | 0.125 | 0.443 | 3.095 | 1.024 | 30.65 | 26.91 | 5352 | 2880 | 1.084 | 0.930 | -0.768 | 0.497 | 2.372 | 0.895 | 26.5 |
| 600S137-97 | 0.1017 | 50 | 0.889 | 3.03 | 4.190 | 1.397 | 2.171 | 0.159 | 0.423 | 4.191 | 1.387 | 50.49 | 48.17 | 10472 | 3805 | 3.066 | 1.216 | -0.734 | 0.480 | 2.330 | 0.901 | 26.1 |
| 600S162-33 | 0.0346 | 33 | 0.344 | 1.17 | 1.793 | 0.598 | 2.282 | 0.116 | 0.581 | 1.793 | 0.573 | 11.33 | 9.09 | 638 | 638 | 0.137 | 0.861 | -1.072 | 0.677 | 2.588 | 0.828 | 41.1 |
| 600S162-43 | 0.0451 | 33 | 0.447 | 1.52 | 2.316 | 0.772 | 2.277 | 0.148 | 0.576 | 2.316 | 0.768 | 16.29 | 13.62 | 1415 | 1240 | 0.303 | 1.095 | -1.062 | 0.670 | 2.577 | 0.830 | 40.9 |
| 600S162-54 | 0.0566 | 33 | 0.556 | 1.89 | 2.861 | 0.954 | 2.268 | 0.180 | 0.570 | 2.861 | 0.948 | 21.05 | 18.87 | 2740 | 1890 | 0.594 | 1.337 | -1.049 | 0.663 | 2.563 | 0.833 | 40.7 |
| 600S162-54 | 0.0566 | 50 | 0.556 | 1.89 | 2.861 | 0.954 | 2.268 | 0.180 | 0.570 | 2.861 | 0.922 | 27.59 | 23.02 | 2822 | 1947 | 0.594 | 1.337 | -1.049 | 0.663 | 2.563 | 0.833 | 33.0 |
| 600S162-68 | 0.0713 | 50 | 0.693 | 2.36 | 3.526 | 1.175 | 2.256 | 0.218 | 0.561 | 3.526 | 1.169 | 38.37 | 33.04 | 5352 | 2880 | 1.174 | 1.626 | -1.032 | 0.655 | 2.543 | 0.835 | 32.8 |
| 600S162-97 | 0.1017 | 50 | 0.966 | 3.28 | 4.799 | 1.600 | 2.229 | 0.283 | 0.542 | 4.800 | 1.591 | 56.42 | 54.27 | 10472 | 3805 | 3.329 | 2.153 | -0.997 | 0.636 | 2.501 | 0.841 | 32.5 |
| 600S162-118 | 0.1242 | 50 | 1.158 | 3.94 | 5.655 | 1.885 | 2.209 | 0.322 | 0.527 | 5.658 | 1.874 | 68.57 | 68.57 | 12526 | 3622 | 5.956 | 2.487 | -0.971 | 0.623 | 2.470 | 0.846 | 32.3 |
| 600S200-33 | 0.0346 | 33 | 0.379 | 1.29 | 2.076 | 0.692 | 2.340 | 0.209 | 0.743 | 2.062 | 0.610 | 12.06 | 10.43 | 638 | 638 | 0.151 | 1.593 | -1.457 | 0.901 | 2.855 | 0.740 | 51.6 |
| 600S200-43 | 0.0451 | 33 | 0.492 | 1.67 | 2.683 | 0.894 | 2.335 | 0.268 | 0.739 | 2.683 | 0.868 | 17.16 | 14.88 | 1415 | 1240 | 0.334 | 2.033 | -1.446 | 0.894 | 2.844 | 0.742 | 51.4 |
| 600S200-54 | 0.0566 | 33 | 0.613 | 2.09 | 3.320 | 1.107 | 2.327 | 0.329 | 0.732 | 3.320 | 1.101 | 23.96 | 21.30 | 2740 | 1890 | 0.655 | 2.493 | -1.432 | 0.887 | 2.829 | 0.744 | 51.3 |
| 600S200-54 | 0.0566 | 50 | 0.613 | 2.09 | 3.320 | 1.107 | 2.327 | 0.329 | 0.732 | 3.320 | 1.007 | 30.16 | 26.31 | 2822 | 1947 | 0.655 | 2.493 | -1.432 | 0.887 | 2.829 | 0.744 | 41.6 |
| 600S200-68 | 0.0713 | 50 | 0.764 | 2.60 | 4.102 | 1.367 | 2.316 | 0.400 | 0.723 | 4.101 | 1.332 | 39.86 | 35.48 | 5352 | 2880 | 1.295 | 3.047 | -1.415 | 0.878 | 2.809 | 0.746 | 41.4 |
| 600S200-97 | 0.1017 | 50 | 1.067 | 3.63 | 5.614 | 1.871 | 2.293 | 0.530 | 0.705 | 5.615 | 1.862 | 64.24 | 60.86 | 10472 | 3805 | 3.679 | 4.080 | -1.378 | 0.859 | 2.767 | 0.752 | 41.2 |
| 600S200-118 | 0.1242 | 50 | 1.283 | 4.36 | 6.643 | 2.214 | 2.276 | 0.612 | 0.691 | 6.646 | 2.204 | 78.09 | 77.88 | 12526 | 3622 | 6.595 | 4.753 | -1.351 | 0.845 | 2.736 | 0.756 | 41.1 |

**1** Web-height to thickness ratio exceeds 200. Web Stiffeners are required at all support points and concentrated loads.

**2** When web height-to thickness ratio exceeds 260, or flange width-to-thickness rato exceeds 60, effective properties are not calculated (limitations in AISI Section B4.1).

See Section Properties Table Notes

# Structural (S) Stud Section Properties

| Member | Design Thickness (in) | Fy (ksi) | Gross Properties | | | | | | | Effective Properties | | | | | | Torsional Properties | | | | | | |
|---|---|---|---|---|---|---|---|---|---|---|---|---|---|---|---|---|---|---|---|---|---|---|
| | | | Area ($in^2$) | Weight (lb/ft) | $I_x$ ($in^4$) | $S_x$ ($in^3$) | $R_x$ (in) | $I_y$ ($in^4$) | $R_y$ (in) | $I_x$ ($in^4$) | $S_x$ ($in^3$) | $M_a$ (in-k) | $M_{ad}$ (in-k) | $Va_g$ (lb) | $Va_{net}$ (lb) | Jx1000 (in4) | $C_w$ (in6) | $X_o$ (in) | m (in) | $R_o$ (in) | β | $L_u$ (in) |
| 600S250-43 | 0.0451 | 33 | 0.537 | 1.83 | 3.083 | 1.028 | 2.396 | 0.458 | 0.923 | 3.083 | 0.909 | 17.97 | 15.72 | 1415 | 1240 | 0.364 | 3.411 | -1.874 | 1.136 | 3.179 | 0.652 | 62.4 |
| 600S250-54 | 0.0566 | 33 | 0.670 | 2.28 | 3.820 | 1.273 | 2.389 | 0.562 | 0.917 | 3.820 | 1.149 | 22.71 | 21.21 | 2740 | 1890 | 0.715 | 4.194 | -1.860 | 1.129 | 3.163 | 0.654 | 62.3 |
| 600S250-54 | 0.0566 | 50 | 0.670 | 2.28 | 3.820 | 1.273 | 2.389 | 0.562 | 0.917 | 3.774 | 1.054 | 31.56 | 27.70 | 2822 | 1947 | 0.715 | 4.194 | -1.860 | 1.129 | 3.163 | 0.654 | 50.5 |
| 600S250-68 | 0.0713 | 50 | 0.836 | 2.84 | 4.728 | 1.576 | 2.379 | 0.688 | 0.908 | 4.728 | 1.373 | 41.10 | 37.61 | 5352 | 2880 | 1.416 | 5.145 | -1.842 | 1.119 | 3.142 | 0.657 | 50.4 |
| 600S250-97 | 0.1017 | 50 | 1.169 | 3.98 | 6.498 | 2.166 | 2.358 | 0.923 | 0.889 | 6.499 | 2.068 | 61.92 | 59.18 | 10472 | 3805 | 4.030 | 6.947 | -1.803 | 1.100 | 3.099 | 0.661 | 50.2 |
| 600S250-118 | 0.1242 | 50 | 1.407 | 4.79 | 7.715 | 2.572 | 2.342 | 1.076 | 0.875 | 7.718 | 2.552 | 76.42 | 75.38 | 12526 | 3622 | 7.234 | 8.142 | -1.775 | 1.085 | 3.066 | 0.665 | 46.7 |
| 600S300-54 | 0.0566 | 33 | 0.726 | 2.47 | 4.320 | 1.440 | 2.439 | 0.875 | 1.098 | 4.276 | 1.196 | 23.64 | 22.13 | 2740 | 1890 | 0.775 | 6.452 | -2.299 | 1.372 | 3.527 | 0.575 | 72.8 |
| 600S300-54 | 0.0566 | 50 | 0.726 | 2.47 | 4.320 | 1.440 | 2.439 | 0.875 | 1.098 | 4.032 | 1.086 | 32.51 | 28.67 | 2822 | 1947 | 0.775 | 6.452 | -2.299 | 1.372 | 3.527 | 0.575 | 59.1 |
| 600S300-68 | 0.0713 | 50 | 0.907 | 3.09 | 5.355 | 1.785 | 2.430 | 1.075 | 1.089 | 5.229 | 1.425 | 42.66 | 39.14 | 5352 | 2880 | 1.537 | 7.937 | -2.280 | 1.363 | 3.506 | 0.577 | 58.9 |
| 600S300-97 | 0.1017 | 50 | 1.271 | 4.32 | 7.383 | 2.461 | 2.410 | 1.454 | 1.070 | 7.294 | 2.237 | 66.97 | 62.32 | 10472 | 3805 | 4.381 | 10.776 | -2.241 | 1.343 | 3.461 | 0.581 | 58.8 |
| 600S300-118 | 0.1242 | 50 | 1.531 | 5.21 | 8.787 | 2.929 | 2.396 | 1.705 | 1.055 | 8.791 | 2.909 | 83.48 | 80.15 | 12526 | 3622 | 7.872 | 12.683 | -2.212 | 1.328 | 3.427 | 0.583 | 55.4 |
| 600S350-54 | 0.0566 | 50 | 0.825 | 2.81 | 5.023 | 1.674 | 2.467 | 1.491 | 1.344 | 4.735 | 1.316 | 39.41 | 35.41 | 2822 | 1947 | 0.881 | 12.942 | -3.037 | 1.787 | 4.137 | 0.461 | 74.4 |
| 600S350-68 | 0.0713 | 50 | 1.032 | 3.51 | 6.238 | 2.079 | 2.459 | 1.841 | 1.336 | 6.180 | 1.755 | 52.54 | 48.26 | 5352 | 2880 | 1.748 | 15.968 | -3.018 | 1.777 | 4.116 | 0.462 | 74.4 |
| 600S350-97 | 0.1017 | 50 | 1.449 | 4.93 | 8.633 | 2.878 | 2.441 | 2.518 | 1.318 | 8.634 | 2.585 | 77.40 | 76.46 | 10472 | 3805 | 4.994 | 21.811 | -2.979 | 1.757 | 4.071 | 0.464 | 74.4 |
| 600S350-118 | 0.1242 | 50 | 1.748 | 5.95 | 10.306 | 3.435 | 2.428 | 2.979 | 1.305 | 10.310 | 3.294 | 98.63 | 97.77 | 12526 | 3622 | 8.990 | 25.791 | -2.951 | 1.742 | 4.038 | 0.466 | 70.6 |
| 800S137-33[1] | 0.0346 | 33 | 0.388 | 1.32 | 3.199 | 0.800 | 2.873 | 0.073 | 0.435 | 3.004 | 0.606 | 10.01 | 8.53 | 474 | 379 | 0.155 | 0.957 | -0.696 | 0.460 | 2.988 | 0.946 | 32.5 |
| 800S137-43 | 0.0451 | 33 | 0.503 | 1.71 | 4.135 | 1.034 | 2.866 | 0.093 | 0.430 | 4.007 | 0.876 | 17.32 | 14.99 | 1051 | 1051 | 0.341 | 1.214 | -0.687 | 0.454 | 2.979 | 0.947 | 32.2 |
| 800S137-54 | 0.0566 | 33 | 0.627 | 2.13 | 5.111 | 1.278 | 2.855 | 0.112 | 0.423 | 5.081 | 1.164 | 22.99 | 20.57 | 2091 | 2091 | 0.670 | 1.478 | -0.676 | 0.448 | 2.964 | 0.948 | 32.0 |
| 800S137-54 | 0.0566 | 50 | 0.627 | 2.13 | 5.111 | 1.278 | 2.855 | 0.112 | 0.423 | 4.982 | 1.058 | 31.67 | 26.77 | 2091 | 2091 | 0.670 | 1.478 | -0.676 | 0.448 | 2.964 | 0.948 | 25.9 |
| 800S137-68 | 0.0713 | 50 | 0.782 | 2.66 | 6.305 | 1.576 | 2.839 | 0.134 | 0.414 | 6.290 | 1.452 | 43.46 | 36.98 | 4220 | 3367 | 1.325 | 1.789 | -0.661 | 0.440 | 2.944 | 0.950 | 25.6 |
| 800S137-97 | 0.1017 | 50 | 1.093 | 3.72 | 8.601 | 2.150 | 2.806 | 0.170 | 0.394 | 8.601 | 2.143 | 73.24 | 65.11 | 10888 | 5940 | 3.767 | 2.349 | -0.630 | 0.423 | 2.902 | 0.953 | 25.1 |
| 800S162-33[1] | 0.0346 | 33 | 0.413 | 1.41 | 3.583 | 0.896 | 2.944 | 0.125 | 0.550 | 3.389 | 0.694 | 11.45 | 10.15 | 474 | 379 | 0.165 | 1.630 | -0.936 | 0.607 | 3.138 | 0.911 | 40.1 |
| 800S162-43 | 0.0451 | 33 | 0.537 | 1.83 | 4.635 | 1.159 | 2.938 | 0.160 | 0.546 | 4.505 | 1.001 | 19.78 | 17.62 | 1051 | 1051 | 0.364 | 2.076 | -0.926 | 0.601 | 3.128 | 0.912 | 39.8 |
| 800S162-54 | 0.0566 | 33 | 0.670 | 2.28 | 5.737 | 1.434 | 2.927 | 0.194 | 0.539 | 5.705 | 1.320 | 26.07 | 23.96 | 2091 | 2091 | 0.715 | 2.539 | -0.914 | 0.594 | 3.114 | 0.914 | 39.6 |
| 800S162-54 | 0.0566 | 50 | 0.670 | 2.28 | 5.737 | 1.434 | 2.927 | 0.194 | 0.539 | 5.606 | 1.205 | 36.08 | 31.31 | 2091 | 2091 | 0.715 | 2.539 | -0.914 | 0.594 | 3.114 | 0.914 | 32.1 |
| 800S162-68 | 0.0713 | 50 | 0.836 | 2.84 | 7.092 | 1.773 | 2.913 | 0.235 | 0.530 | 7.074 | 1.647 | 49.32 | 42.89 | 4220 | 3367 | 1.416 | 3.093 | -0.899 | 0.586 | 3.094 | 0.916 | 31.9 |
| 800S162-97 | 0.1017 | 50 | 1.169 | 3.98 | 9.717 | 2.429 | 2.883 | 0.305 | 0.511 | 9.717 | 2.422 | 82.72 | 74.77 | 10888 | 5940 | 4.030 | 4.114 | -0.866 | 0.568 | 3.053 | 0.920 | 31.4 |
| 800S162-118 | 0.1242 | 50 | 1.407 | 4.79 | 11.509 | 2.877 | 2.860 | 0.347 | 0.496 | 11.511 | 2.869 | 104.97 | 100.87 | 16239 | 7117 | 7.234 | 4.766 | -0.842 | 0.556 | 3.023 | 0.922 | 28.0 |
| 800S200-33[1] | 0.0346 | 33 | 0.448 | 1.52 | 4.097 | 1.024 | 3.024 | 0.227 | 0.712 | 4.096 | 0.792 | 13.06 | 11.76 | 474 | 379 | 0.179 | 2.971 | -1.288 | 0.817 | 3.363 | 0.853 | 50.6 |
| 800S200-43 | 0.0451 | 33 | 0.582 | 1.98 | 5.303 | 1.326 | 3.018 | 0.292 | 0.708 | 5.302 | 1.288 | 25.45 | 20.34 | 1051 | 1051 | 0.395 | 3.797 | -1.277 | 0.811 | 3.353 | 0.855 | 50.3 |
| 800S200-54 | 0.0566 | 33 | 0.726 | 2.47 | 6.574 | 1.644 | 3.009 | 0.357 | 0.701 | 6.573 | 1.639 | 35.67 | 29.36 | 2091 | 2091 | 0.775 | 4.663 | -1.265 | 0.804 | 3.338 | 0.856 | 47.8 |
| 800S200-54 | 0.0566 | 50 | 0.726 | 2.47 | 6.574 | 1.644 | 3.009 | 0.357 | 0.701 | 6.573 | 1.483 | 44.41 | 36.01 | 2091 | 2091 | 0.775 | 4.663 | -1.265 | 0.804 | 3.338 | 0.856 | 40.7 |
| 800S200-68 | 0.0713 | 50 | 0.907 | 3.09 | 8.143 | 2.036 | 2.996 | 0.435 | 0.692 | 8.142 | 1.989 | 59.54 | 49.13 | 4220 | 3367 | 1.537 | 5.712 | -1.248 | 0.796 | 3.319 | 0.859 | 38.4 |
| 800S200-97 | 0.1017 | 50 | 1.271 | 4.32 | 11.207 | 2.802 | 2.970 | 0.577 | 0.674 | 11.207 | 2.795 | 96.41 | 85.83 | 10888 | 5940 | 4.381 | 7.684 | -1.214 | 0.777 | 3.278 | 0.863 | 37.2 |
| 800S200-118 | 0.1242 | 50 | 1.531 | 5.21 | 13.320 | 3.330 | 2.950 | 0.666 | 0.659 | 13.322 | 3.322 | 117.70 | 112.34 | 16239 | 7117 | 7.872 | 8.981 | -1.188 | 0.764 | 3.248 | 0.866 | 36.5 |
| 800S250-43 | 0.0451 | 33 | 0.627 | 2.13 | 6.017 | 1.504 | 3.097 | 0.500 | 0.893 | 6.016 | 1.294 | 25.57 | 21.41 | 1051 | 1051 | 0.425 | 6.374 | -1.675 | 1.043 | 3.632 | 0.787 | 61.5 |
| 800S250-54 | 0.0566 | 33 | 0.783 | 2.66 | 7.467 | 1.867 | 3.089 | 0.614 | 0.886 | 7.466 | 1.703 | 33.65 | 29.16 | 2091 | 2091 | 0.836 | 7.850 | -1.661 | 1.036 | 3.617 | 0.789 | 61.4 |
| 800S250-54 | 0.0566 | 50 | 0.783 | 2.66 | 7.467 | 1.867 | 3.089 | 0.614 | 0.886 | 7.399 | 1.490 | 44.61 | 37.84 | 2091 | 2091 | 0.836 | 7.850 | -1.661 | 1.036 | 3.617 | 0.789 | 49.8 |
| 800S250-68 | 0.0713 | 50 | 0.978 | 3.33 | 9.263 | 2.316 | 3.077 | 0.752 | 0.877 | 9.258 | 2.047 | 61.28 | 51.85 | 4220 | 3367 | 1.658 | 9.652 | -1.644 | 1.027 | 3.597 | 0.791 | 49.6 |
| 800S250-97 | 0.1017 | 50 | 1.372 | 4.67 | 12.793 | 3.198 | 3.053 | 1.009 | 0.858 | 12.793 | 3.067 | 91.82 | 83.02 | 10888 | 5940 | 4.731 | 13.091 | -1.607 | 1.008 | 3.555 | 0.796 | 46.4 |
| 800S250-118 | 0.1242 | 50 | 1.655 | 5.63 | 15.246 | 3.811 | 3.035 | 1.176 | 0.843 | 15.248 | 3.786 | 113.36 | 107.04 | 16239 | 7117 | 8.511 | 15.395 | -1.580 | 0.994 | 3.524 | 0.799 | 45.6 |
| 800S300-54 | 0.0566 | 50 | 0.839 | 2.86 | 8.360 | 2.090 | 3.156 | 0.959 | 1.069 | 7.906 | 1.486 | 44.48 | 38.97 | 2091 | 2091 | 0.896 | 12.076 | -2.073 | 1.271 | 3.924 | 0.721 | 58.6 |
| 800S300-68 | 0.0713 | 50 | 1.050 | 3.57 | 10.384 | 2.596 | 3.145 | 1.179 | 1.060 | 10.125 | 2.124 | 63.58 | 53.66 | 4220 | 3367 | 1.779 | 14.888 | -2.055 | 1.262 | 3.904 | 0.723 | 58.4 |
| 800S300-97 | 0.1017 | 50 | 1.474 | 5.01 | 14.379 | 3.595 | 3.123 | 1.595 | 1.040 | 14.189 | 3.295 | 98.64 | 86.69 | 10888 | 5940 | 5.082 | 20.304 | -2.017 | 1.243 | 3.861 | 0.727 | 58.1 |
| 800S300-118 | 0.1242 | 50 | 1.779 | 6.05 | 17.172 | 4.293 | 3.107 | 1.872 | 1.026 | 17.174 | 4.104 | 122.86 | 112.62 | 16239 | 7117 | 9.149 | 23.979 | -1.989 | 1.229 | 3.829 | 0.730 | 54.5 |
| 1000S162-431 | 0.0451 | 33 | 0.627 | 2.13 | 8.028 | 1.606 | 3.577 | 0.168 | 0.518 | 7.537 | 1.271 | 20.97 | 18.12 | 836 | 669 | 0.425 | 3.430 | -0.823 | 0.545 | 3.707 | 0.951 | 38.8 |
| 1000S162-54 | 0.0566 | 33 | 0.783 | 2.66 | 9.954 | 1.991 | 3.566 | 0.204 | 0.511 | 9.638 | 1.694 | 33.47 | 29.91 | 1660 | 1660 | 0.836 | 4.198 | -0.812 | 0.538 | 3.693 | 0.952 | 38.5 |
| 1000S162-54 | 0.0566 | 50 | 0.783 | 2.66 | 9.954 | 1.991 | 3.566 | 0.204 | 0.511 | 9.410 | 1.531 | 45.83 | 38.68 | 1660 | 1660 | 0.836 | 4.198 | -0.812 | 0.538 | 3.693 | 0.952 | 31.3 |
| 1000S162-68 | 0.0713 | 50 | 0.978 | 3.33 | 12.330 | 2.466 | 3.550 | 0.247 | 0.502 | 11.978 | 2.122 | 63.53 | 53.74 | 3345 | 3345 | 1.658 | 5.121 | -0.798 | 0.531 | 3.673 | 0.953 | 31.0 |
| 1000S162-97 | 0.1017 | 50 | 1.372 | 4.67 | 16.974 | 3.395 | 3.517 | 0.320 | 0.483 | 16.971 | 3.254 | 97.44 | 87.70 | 9862 | 7175 | 4.731 | 6.827 | -0.768 | 0.514 | 3.632 | 0.955 | 30.4 |
| 1000S162-118 | 0.1242 | 50 | 1.655 | 5.63 | 20.177 | 4.035 | 3.491 | 0.364 | 0.469 | 20.177 | 4.028 | 130.76 | 120.56 | 16239 | 9539 | 8.511 | 7.924 | -0.746 | 0.502 | 3.601 | 0.957 | 30.0 |
| 1000S200-431 | 0.0451 | 33 | 0.672 | 2.29 | 9.088 | 1.818 | 3.676 | 0.309 | 0.677 | 8.614 | 1.440 | 23.76 | 21.21 | 836 | 669 | 0.456 | 6.236 | -1.147 | 0.743 | 3.910 | 0.914 | 49.3 |
| 1000S200-54 | 0.0566 | 33 | 0.839 | 2.86 | 11.282 | 2.256 | 3.666 | 0.378 | 0.671 | 10.962 | 1.958 | 38.69 | 34.77 | 1660 | 1660 | 0.896 | 7.665 | -1.135 | 0.737 | 3.896 | 0.915 | 49.1 |
| 1000S200-54 | 0.0566 | 50 | 0.839 | 2.86 | 11.282 | 2.256 | 3.666 | 0.378 | 0.671 | 10.788 | 1.661 | 49.72 | 45.06 | 1660 | 1660 | 0.896 | 7.665 | -1.135 | 0.737 | 3.896 | 0.915 | 39.8 |
| 1000S200-68 | 0.0713 | 50 | 1.050 | 3.57 | 13.999 | 2.800 | 3.652 | 0.460 | 0.662 | 13.676 | 2.389 | 71.52 | 62.15 | 3345 | 3345 | 1.779 | 9.401 | -1.120 | 0.729 | 3.877 | 0.917 | 39.6 |
| 1000S200-97 | 0.1017 | 50 | 1.474 | 5.01 | 19.343 | 3.869 | 3.622 | 0.610 | 0.643 | 19.340 | 3.726 | 111.57 | 100.50 | 9862 | 7175 | 5.082 | 12.679 | -1.088 | 0.711 | 3.836 | 0.920 | 39.0 |
| 1000S200-118 | 0.1242 | 50 | 1.779 | 6.05 | 23.060 | 4.612 | 3.600 | 0.704 | 0.629 | 23.060 | 4.605 | 149.43 | 137.74 | 16239 | 9539 | 9.149 | 14.848 | -1.064 | 0.699 | 3.806 | 0.922 | 38.7 |

**1** Web-height to thickness ratio exceeds 200. Web Stiffeners are required at all support points and concentrated loads.

**2** When web height-to thickness ratio exceeds 260, or flange width-to-thickness rato exceeds 60, effective properties are not calculated (limitations in AISI Section B4.1).

See Section Properties Table Notes

# Structural (S) Stud Section Properties

| Member | Design Thickness (in) | Fy (ksi) | Gross Properties | | | | | | | Effective Properties | | | | | | Torsional Properties | | | | | | |
|---|---|---|---|---|---|---|---|---|---|---|---|---|---|---|---|---|---|---|---|---|---|---|
| | | | Area ($in^2$) | Weight (lb/ft) | $I_x$ ($in^4$) | $S_x$ ($in^3$) | $R_x$ (in) | $I_y$ ($in^4$) | $R_y$ (in) | $I_x$ ($in^4$) | $S_x$ ($in^3$) | $M_a$ (in-k) | $M_{ad}$ (in-k) | $Va_g$ (lb) | $Va_{net}$ (lb) | Jx1000 (in4) | $C_w$ (in6) | $X_o$ (in) | m (in) | $R_o$ (in) | β | $L_u$ (in) |
| 1000S250-431 | 0.0451 | 33 | 0.717 | 2.44 | 10.205 | 2.041 | 3.771 | 0.531 | 0.860 | 10.203 | 1.579 | 26.06 | 22.43 | 836 | 669 | 0.486 | 10.481 | -1.518 | 0.965 | 4.155 | 0.867 | 60.7 |
| 1000S250-54 | 0.0566 | 33 | 0.896 | 3.05 | 12.681 | 2.536 | 3.762 | 0.653 | 0.854 | 12.678 | 2.253 | 44.53 | 36.94 | 1660 | 1660 | 0.957 | 12.922 | -1.505 | 0.958 | 4.141 | 0.868 | 60.5 |
| 1000S250-54 | 0.0566 | 50 | 0.896 | 3.05 | 12.681 | 2.536 | 3.762 | 0.653 | 0.854 | 12.678 | 1.822 | 54.55 | 47.66 | 1660 | 1660 | 0.957 | 12.922 | -1.505 | 0.958 | 4.141 | 0.868 | 49.1 |
| 1000S250-68 | 0.0713 | 50 | 1.121 | 3.81 | 15.756 | 3.151 | 3.749 | 0.799 | 0.844 | 15.753 | 2.736 | 81.93 | 65.86 | 3345 | 3345 | 1.899 | 15.909 | -1.488 | 0.950 | 4.121 | 0.870 | 48.8 |
| 1000S250-97 | 0.1017 | 50 | 1.576 | 5.36 | 21.834 | 4.367 | 3.722 | 1.073 | 0.825 | 21.831 | 4.202 | 125.80 | 107.14 | 9862 | 7175 | 5.433 | 21.632 | -1.454 | 0.932 | 4.080 | 0.873 | 45.6 |
| 1000S250-118 | 0.1242 | 50 | 1.904 | 6.48 | 26.088 | 5.218 | 3.702 | 1.251 | 0.811 | 26.088 | 5.185 | 155.25 | 139.63 | 16239 | 9539 | 9.788 | 25.490 | -1.428 | 0.918 | 4.050 | 0.876 | 44.8 |
| 1000S300-54 | 0.0566 | 33 | 0.953 | 3.24 | 14.080 | 2.816 | 3.845 | 1.024 | 1.037 | 13.964 | 2.272 | 44.90 | 38.27 | 1660 | 1660 | 1.017 | 19.888 | -1.892 | 1.185 | 4.409 | 0.816 | 71.5 |
| 1000S300-54 | 0.0566 | 50 | 0.953 | 3.24 | 14.080 | 2.816 | 3.845 | 1.024 | 1.037 | 13.521 | 1.832 | 54.85 | 49.12 | 1660 | 1660 | 1.017 | 19.888 | -1.892 | 1.185 | 4.409 | 0.816 | 58.0 |
| 1000S300-68 | 0.0713 | 50 | 1.192 | 4.06 | 17.513 | 3.503 | 3.833 | 1.258 | 1.027 | 17.119 | 2.746 | 82.23 | 68.23 | 3345 | 3345 | 2.020 | 24.551 | -1.874 | 1.176 | 4.389 | 0.818 | 57.8 |
| 1000S300-97 | 0.1017 | 50 | 1.677 | 5.71 | 24.325 | 4.865 | 3.808 | 1.703 | 1.007 | 23.992 | 4.490 | 134.43 | 111.66 | 9862 | 7175 | 5.783 | 33.570 | -1.838 | 1.158 | 4.347 | 0.821 | 57.4 |
| 1000S300-118 | 0.1242 | 50 | 2.028 | 6.90 | 29.117 | 5.823 | 3.789 | 1.998 | 0.993 | 29.117 | 5.586 | 167.24 | 146.34 | 16239 | 9539 | 10.427 | 39.725 | -1.811 | 1.144 | 4.316 | 0.824 | 53.8 |
| 1000S350-54 | 0.0566 | 33 | 1.052 | 3.58 | 16.223 | 3.245 | 3.928 | 1.768 | 1.297 | 15.965 | 2.741 | 54.16 | 47.21 | 1660 | 1660 | 1.123 | 36.575 | -2.546 | 1.566 | 4.857 | 0.725 | 88.9 |
| 1000S350-54 | 0.0566 | 50 | 1.052 | 3.58 | 16.223 | 3.245 | 3.928 | 1.768 | 1.297 | 15.626 | 2.267 | 67.88 | 60.89 | 1660 | 1660 | 1.123 | 36.575 | -2.546 | 1.566 | 4.857 | 0.725 | 72.2 |
| 1000S350-68 | 0.0713 | 50 | 1.317 | 4.48 | 20.209 | 4.042 | 3.917 | 2.185 | 1.288 | 20.056 | 3.379 | 101.16 | 83.89 | 3345 | 3345 | 2.232 | 45.277 | -2.529 | 1.557 | 4.837 | 0.727 | 72.0 |
| 1000S350-97 | 0.1017 | 50 | 1.855 | 6.31 | 28.154 | 5.631 | 3.895 | 2.992 | 1.270 | 28.152 | 5.110 | 153.00 | 135.86 | 9862 | 7175 | 6.397 | 62.280 | -2.492 | 1.538 | 4.795 | 0.730 | 71.6 |
| 1000S350-118 | 0.1242 | 50 | 2.245 | 7.64 | 33.780 | 6.756 | 3.879 | 3.544 | 1.256 | 33.780 | 6.486 | 194.19 | 176.74 | 16239 | 9539 | 11.544 | 74.030 | -2.465 | 1.524 | 4.764 | 0.732 | 67.8 |
| 1200S162-541 | 0.0566 | 33 | 0.896 | 3.05 | 15.736 | 2.623 | 4.191 | 0.212 | 0.486 | 14.772 | 2.064 | 34.05 | 29.26 | 1377 | 1102 | 0.957 | 6.340 | -0.732 | 0.493 | 4.282 | 0.971 | 37.5 |
| 1200S162-541 | 0.0566 | 50 | 0.896 | 3.05 | 15.736 | 2.623 | 4.191 | 0.212 | 0.486 | 14.330 | 1.870 | 46.76 | 37.52 | 1377 | 1102 | 0.957 | 6.340 | -0.732 | 0.493 | 4.282 | 0.971 | 30.5 |
| 1200S162-68 | 0.0713 | 50 | 1.121 | 3.81 | 19.526 | 3.254 | 4.174 | 0.255 | 0.477 | 18.424 | 2.591 | 77.58 | 63.20 | 2770 | 2770 | 1.899 | 7.739 | -0.719 | 0.485 | 4.262 | 0.972 | 30.2 |
| 1200S162-97 | 0.1017 | 50 | 1.576 | 5.36 | 26.977 | 4.496 | 4.138 | 0.332 | 0.459 | 26.754 | 4.056 | 121.43 | 105.38 | 8145 | 7410 | 5.433 | 10.331 | -0.691 | 0.470 | 4.220 | 0.973 | 29.5 |
| 1200S162-118 | 0.1242 | 50 | 1.904 | 6.48 | 32.158 | 5.360 | 4.110 | 0.377 | 0.445 | 32.154 | 5.151 | 154.22 | 138.87 | 14982 | 11034 | 9.788 | 12.002 | -0.670 | 0.459 | 4.188 | 0.974 | 29.0 |
| 1200S200-541 | 0.0566 | 33 | 0.953 | 3.24 | 17.668 | 2.945 | 4.307 | 0.394 | 0.643 | 16.700 | 2.383 | 39.32 | 34.44 | 1377 | 1102 | 1.017 | 11.550 | -1.032 | 0.681 | 4.475 | 0.947 | 48.0 |
| 1200S200-541 | 0.0566 | 50 | 0.953 | 3.24 | 17.668 | 2.945 | 4.307 | 0.394 | 0.643 | 16.361 | 2.031 | 50.77 | 44.30 | 1377 | 1102 | 1.017 | 11.550 | -1.032 | 0.681 | 4.475 | 0.947 | 39.0 |
| 1200S200-68 | 0.0713 | 50 | 1.192 | 4.06 | 21.955 | 3.659 | 4.291 | 0.479 | 0.634 | 20.892 | 2.911 | 87.15 | 73.93 | 2770 | 2770 | 2.020 | 14.176 | -1.017 | 0.673 | 4.456 | 0.948 | 38.7 |
| 1200S200-97 | 0.1017 | 50 | 1.677 | 5.71 | 30.428 | 5.071 | 4.259 | 0.635 | 0.615 | 30.191 | 4.626 | 138.51 | 121.84 | 8145 | 7410 | 5.783 | 19.150 | -0.987 | 0.656 | 4.415 | 0.950 | 38.1 |
| 1200S200-118 | 0.1242 | 50 | 2.028 | 6.90 | 36.361 | 6.060 | 4.235 | 0.733 | 0.601 | 36.356 | 5.848 | 175.09 | 159.83 | 14982 | 11034 | 10.427 | 22.451 | -0.964 | 0.644 | 4.384 | 0.952 | 37.7 |
| 1200S250-541 | 0.0566 | 33 | 1.009 | 3.43 | 19.687 | 3.281 | 4.417 | 0.683 | 0.823 | 18.858 | 2.429 | 40.08 | 36.91 | 1377 | 1102 | 1.078 | 19.505 | -1.378 | 0.892 | 4.699 | 0.914 | 59.5 |
| 1200S250-541 | 0.0566 | 50 | 1.009 | 3.43 | 19.687 | 3.281 | 4.417 | 0.683 | 0.823 | 18.511 | 2.108 | 52.69 | 47.35 | 1377 | 1102 | 1.078 | 19.505 | -1.378 | 0.892 | 4.699 | 0.914 | 48.3 |
| 1200S250-68 | 0.0713 | 50 | 1.263 | 4.30 | 24.491 | 4.082 | 4.403 | 0.836 | 0.813 | 23.610 | 2.938 | 87.95 | 79.05 | 2770 | 2770 | 2.141 | 24.034 | -1.362 | 0.884 | 4.680 | 0.915 | 48.1 |
| 1200S250-97 | 0.1017 | 50 | 1.779 | 6.05 | 34.027 | 5.671 | 4.373 | 1.122 | 0.794 | 33.851 | 4.998 | 149.63 | 130.54 | 8145 | 7410 | 6.134 | 32.734 | -1.329 | 0.867 | 4.639 | 0.918 | 47.5 |
| 1200S250-118 | 0.1242 | 50 | 2.152 | 7.32 | 40.740 | 6.790 | 4.351 | 1.308 | 0.780 | 40.736 | 6.537 | 195.71 | 171.85 | 14982 | 11034 | 11.065 | 38.619 | -1.305 | 0.854 | 4.609 | 0.920 | 47.1 |
| 1200S300-541 | 0.0566 | 33 | 1.066 | 3.63 | 21.705 | 3.618 | 4.513 | 1.074 | 1.004 | 21.700 | 2.673 | 44.11 | 38.41 | 1377 | 1102 | 1.138 | 30.051 | -1.743 | 1.111 | 4.941 | 0.876 | 70.7 |
| 1200S300-541 | 0.0566 | 50 | 1.066 | 3.63 | 21.705 | 3.618 | 4.513 | 1.074 | 1.004 | 21.256 | 2.180 | 54.49 | 49.11 | 1377 | 1102 | 1.138 | 30.051 | -1.743 | 1.111 | 4.941 | 0.876 | 57.4 |
| 1200S300-68 | 0.0713 | 50 | 1.335 | 4.54 | 27.028 | 4.505 | 4.500 | 1.320 | 0.994 | 26.553 | 3.233 | 96.80 | 82.33 | 2770 | 2770 | 2.262 | 37.126 | -1.726 | 1.103 | 4.921 | 0.877 | 57.2 |
| 1200S300-97 | 0.1017 | 50 | 1.881 | 6.40 | 37.627 | 6.271 | 4.473 | 1.787 | 0.975 | 37.110 | 5.822 | 174.32 | 136.41 | 8145 | 7410 | 6.484 | 50.853 | -1.691 | 1.085 | 4.880 | 0.880 | 56.7 |
| 1200S300-118 | 0.1242 | 50 | 2.276 | 7.74 | 45.119 | 7.520 | 4.452 | 2.096 | 0.960 | 45.115 | 7.234 | 216.59 | 180.23 | 14982 | 11034 | 11.704 | 60.251 | -1.666 | 1.071 | 4.850 | 0.882 | 53.0 |
| 1200S350-541 | 0.0566 | 33 | 1.165 | 3.96 | 24.866 | 4.144 | 4.620 | 1.866 | 1.266 | 24.649 | 3.244 | 53.52 | 47.72 | 1377 | 1102 | 1.244 | 54.279 | -2.363 | 1.478 | 5.342 | 0.804 | 71.4 |
| 1200S350-541 | 0.0566 | 50 | 1.165 | 3.96 | 24.866 | 4.144 | 4.620 | 1.866 | 1.266 | 24.159 | 2.707 | 67.67 | 61.32 | 1377 | 1102 | 1.244 | 54.279 | -2.363 | 1.478 | 5.342 | 0.804 | 71.4 |
| 1200S350-68 | 0.0713 | 50 | 1.460 | 4.97 | 31.004 | 5.167 | 4.609 | 2.306 | 1.257 | 30.967 | 3.995 | 119.62 | 101.62 | 2770 | 2770 | 2.473 | 67.251 | -2.346 | 1.469 | 5.322 | 0.806 | 71.2 |
| 1200S350-97 | 0.1017 | 50 | 2.059 | 7.00 | 43.280 | 7.213 | 4.585 | 3.159 | 1.239 | 43.274 | 6.582 | 197.06 | 166.00 | 8145 | 7410 | 7.098 | 92.672 | -2.310 | 1.450 | 5.281 | 0.809 | 70.8 |
| 1200S350-118 | 0.1242 | 50 | 2.494 | 8.48 | 52.006 | 8.668 | 4.567 | 3.742 | 1.225 | 52.002 | 8.334 | 249.52 | 217.31 | 14982 | 11034 | 12.821 | 110.302 | -2.284 | 1.436 | 5.251 | 0.811 | 66.9 |
| 1400S200-541 | 0.0566 | 33 | 1.066 | 3.63 | 25.961 | 3.709 | 4.936 | 0.406 | 0.617 | 23.813 | 2.805 | 46.29 | 39.15 | 1176 | 941 | 1.138 | 16.355 | -0.946 | 0.633 | 5.063 | 0.965 | 47.0 |
| 1400S200-541 | 0.0566 | 50 | 1.066 | 3.63 | 25.961 | 3.709 | 4.936 | 0.406 | 0.617 | 23.230 | 2.405 | 60.12 | 50.03 | 1176 | 941 | 1.138 | 16.355 | -0.946 | 0.633 | 5.063 | 0.965 | 38.2 |
| 1400S200-68 | 0.0713 | 50 | 1.335 | 4.54 | 32.297 | 4.614 | 4.919 | 0.494 | 0.608 | 29.856 | 3.428 | 102.64 | 84.29 | 2364 | 2364 | 2.262 | 20.083 | -0.932 | 0.625 | 5.043 | 0.966 | 37.9 |
| 1400S200-97 | 0.1017 | 50 | 1.881 | 6.40 | 44.870 | 6.410 | 4.884 | 0.655 | 0.590 | 43.652 | 5.522 | 165.31 | 141.26 | 6938 | 6938 | 6.484 | 27.156 | -0.904 | 0.609 | 5.002 | 0.967 | 37.3 |
| 1400S200-118 | 0.1242 | 50 | 2.276 | 7.74 | 53.719 | 7.674 | 4.858 | 0.756 | 0.576 | 53.546 | 7.057 | 211.27 | 187.34 | 12743 | 11285 | 11.704 | 31.861 | -0.883 | 0.598 | 4.971 | 0.968 | 36.8 |
| 1400S250-541 | 0.0566 | 33 | 1.122 | 3.82 | 28.712 | 4.102 | 5.058 | 0.707 | 0.794 | 26.804 | 2.861 | 47.21 | 42.34 | 1176 | 941 | 1.198 | 27.675 | -1.272 | 0.835 | 5.275 | 0.942 | 58.6 |
| 1400S250-541 | 0.0566 | 50 | 1.122 | 3.82 | 28.712 | 4.102 | 5.058 | 0.707 | 0.794 | 26.210 | 2.494 | 62.35 | 54.05 | 1176 | 941 | 1.198 | 27.675 | -1.272 | 0.835 | 5.275 | 0.942 | 47.6 |
| 1400S250-68 | 0.0713 | 50 | 1.406 | 4.78 | 35.755 | 5.108 | 5.043 | 0.865 | 0.784 | 33.627 | 3.467 | 103.80 | 91.04 | 2364 | 2364 | 2.383 | 34.118 | -1.257 | 0.827 | 5.256 | 0.943 | 47.3 |
| 1400S250-97 | 0.1017 | 50 | 1.983 | 6.74 | 49.781 | 7.112 | 5.011 | 1.161 | 0.765 | 48.686 | 5.945 | 178.00 | 152.50 | 6938 | 6938 | 6.835 | 46.520 | -1.225 | 0.811 | 5.215 | 0.945 | 46.7 |
| 1400S250-118 | 0.1242 | 50 | 2.400 | 8.17 | 59.697 | 8.528 | 4.987 | 1.353 | 0.751 | 59.522 | 7.854 | 235.15 | 202.61 | 12743 | 11285 | 12.342 | 54.927 | -1.203 | 0.798 | 5.185 | 0.946 | 46.2 |
| 1400S300-541 | 0.0566 | 33 | 1.179 | 4.01 | 31.463 | 4.495 | 5.166 | 1.115 | 0.972 | 29.726 | 2.956 | 48.78 | 44.43 | 1176 | 941 | 1.259 | 42.690 | -1.617 | 1.046 | 5.500 | 0.914 | 69.9 |
| 1400S300-541 | 0.0566 | 50 | 1.179 | 4.01 | 31.463 | 4.495 | 5.166 | 1.115 | 0.972 | 27.327 | 2.553 | 63.82 | 56.59 | 1176 | 941 | 1.259 | 42.690 | -1.617 | 1.046 | 5.500 | 0.914 | 56.8 |
| 1400S300-68 | 0.0713 | 50 | 1.477 | 5.03 | 39.213 | 5.602 | 5.152 | 1.370 | 0.963 | 36.428 | 3.574 | 107.01 | 95.45 | 2364 | 2364 | 2.503 | 52.772 | -1.601 | 1.038 | 5.480 | 0.915 | 56.5 |
| 1400S300-97 | 0.1017 | 50 | 2.084 | 7.09 | 54.692 | 7.813 | 5.123 | 1.854 | 0.943 | 53.380 | 6.302 | 188.69 | 160.22 | 6938 | 6938 | 7.186 | 72.365 | -1.568 | 1.020 | 5.440 | 0.917 | 55.9 |
| 1400S300-118 | 0.1242 | 50 | 2.525 | 8.59 | 65.676 | 9.382 | 5.100 | 2.175 | 0.928 | 65.596 | 8.376 | 250.77 | 213.33 | 12743 | 11285 | 12.981 | 85.812 | -1.544 | 1.008 | 5.409 | 0.919 | 55.5 |

**1** Web-height to thickness ratio exceeds 200. Web Stiffeners are required at all support points and concentrated loads.

**2** When web height-to thickness ratio exceeds 260, or flange width-to-thickness rato exceeds 60, effective properties are not calculated (limitations in AISI Section B4.1).

See Section Properties Table Notes

# Structural (S) Stud Section Properties

| Member | Design Thickness (in) | Fy (ksi) | Gross Properties | | | | | | | Effective Properties | | | | | | Torsional Properties | | | | | | |
|---|---|---|---|---|---|---|---|---|---|---|---|---|---|---|---|---|---|---|---|---|---|---|
| | | | Area ($in^2$) | Weight (lb/ft) | $I_x$ ($in^4$) | $S_x$ ($in^3$) | $R_x$ (in) | $I_y$ ($in^4$) | $R_y$ (in) | $I_x$ ($in^4$) | $S_x$ ($in^3$) | $M_a$ (in-k) | $M_{ad}$ (in-k) | $Va_B$ (lb) | $Va_{net}$ (lb) | Jx1000 (in4) | $C_w$ (in6) | $X_o$ (in) | m (in) | $R_o$ (in) | β | $L_u$ (in) |
| 1600S250-97 | 0.1017 | 50 | 2.186 | 7.44 | 69.503 | 8.688 | 5.639 | 1.193 | 0.739 | 66.649 | 6.888 | 206.22 | 172.62 | 6042 | 6042 | 7.536 | 63.082 | -1.138 | 0.762 | 5.800 | 0.962 | 45.9 |
| 1600S250-118 | 0.1242 | 50 | 2.649 | 9.01 | 83.459 | 10.432 | 5.613 | 1.390 | 0.724 | 81.961 | 9.167 | 274.47 | 231.24 | 11086 | 11086 | 13.620 | 74.524 | -1.116 | 0.750 | 5.769 | 0.963 | 45.4 |
| 1600S300-681 | 0.0713 | 50 | 1.620 | 5.51 | 54.355 | 6.794 | 5.793 | 1.411 | 0.933 | 49.256 | 4.143 | 103.58 | 89.73 | 2062 | 1649 | 2.745 | 71.608 | -1.494 | 0.981 | 6.055 | 0.939 | 55.8 |
| 1600S300-97 | 0.1017 | 50 | 2.288 | 7.78 | 75.929 | 9.491 | 5.761 | 1.910 | 0.914 | 72.942 | 7.291 | 218.29 | 182.59 | 6042 | 6042 | 7.887 | 98.275 | -1.463 | 0.964 | 6.014 | 0.941 | 55.1 |
| 1600S300-118 | 0.1242 | 50 | 2.773 | 9.43 | 91.284 | 11.411 | 5.738 | 2.240 | 0.899 | 89.961 | 9.756 | 292.10 | 244.86 | 11086 | 11086 | 14.258 | 116.606 | -1.439 | 0.951 | 5.983 | 0.942 | 54.7 |
| 1600S350-68[1] | 0.0713 | 50 | 1.745 | 5.94 | 61.641 | 7.705 | 5.944 | 2.490 | 1.195 | 57.601 | 5.104 | 127.59 | 112.58 | 2062 | 1649 | 2.957 | 127.370 | -2.055 | 1.322 | 6.402 | 0.897 | 69.7 |
| 1600S350-97 | 0.1017 | 50 | 2.466 | 8.39 | 86.296 | 10.787 | 5.916 | 3.410 | 1.176 | 83.748 | 8.285 | 248.05 | 223.83 | 6042 | 6042 | 8.501 | 175.895 | -2.022 | 1.304 | 6.362 | 0.899 | 69.1 |
| 1600S350-118 | 0.1242 | 50 | 2.990 | 10.17 | 103.924 | 12.990 | 5.895 | 4.039 | 1.162 | 102.57 | 11.236 | 336.42 | 296.35 | 11086 | 11086 | 15.376 | 209.692 | -1.998 | 1.291 | 6.332 | 0.900 | 68.8 |



1 Web-height to thickness ratio exceeds 200. Web Stiffeners are required at all support points and concentrated loads.

2 When web height-to thickness ratio exceeds 260, or flange width-to-thickness rato exceeds 60, effective properties are not calculated (limitations in AISI Section B4.1).

See Section Properties Table Notes

# (T) Track Section Properties

| Member | Design Thickness (in) | Fy (ksi) | Gross Properties | | | | | | | Effective Properties | | | | Torsional Properties | | | | | |
|---|---|---|---|---|---|---|---|---|---|---|---|---|---|---|---|---|---|---|---|
| | | | Area ($in^2$) | Weight (lb/ft) | $I_x$ ($in^4$) | $S_x$ ($in^3$) | $R_x$ (in) | $I_y$ ($in^4$) | $R_y$ (in) | $I_x$ ($in^4$) | $S_x$ ($in^3$) | $M_a$ (in-k) | $Va_a$ (lb) | Jx1000 (in4) | $C_w$ ($in^6$) | $X_o$ (in) | m (in) | $R_o$ (in) | β |
| 162T125-18 | 0.0188 | 33 | 0.078 | 0.26 | 0.042 | 0.048 | 0.733 | 0.013 | 0.411 | 0.030 | 0.025 | 0.42 | 302 | 0.0091 | 0.007 | -0.876 | 0.503 | 1.215 | 0.479 |
| 162T125-27 | 0.0283 | 33 | 0.117 | 0.40 | 0.063 | 0.072 | 0.735 | 0.020 | 0.410 | 0.051 | 0.044 | 0.87 | 541 | 0.0312 | 0.010 | -0.872 | 0.501 | 1.211 | 0.482 |
| 162T125-30 | 0.0312 | 33 | 0.129 | 0.44 | 0.070 | 0.079 | 0.735 | 0.022 | 0.409 | 0.058 | 0.051 | 1.00 | 597 | 0.0417 | 0.012 | -0.870 | 0.500 | 1.210 | 0.483 |
| 162T125-33 | 0.0346 | 33 | 0.143 | 0.49 | 0.077 | 0.087 | 0.736 | 0.024 | 0.408 | 0.066 | 0.059 | 1.16 | 663 | 0.0569 | 0.013 | -0.868 | 0.499 | 1.209 | 0.484 |
| 250T125-18 | 0.0188 | 33 | 0.094 | 0.32 | 0.104 | 0.079 | 1.052 | 0.015 | 0.400 | 0.078 | 0.044 | 0.73 | 245 | 0.0111 | 0.018 | -0.767 | 0.460 | 1.362 | 0.682 |
| 250T125-27 | 0.0283 | 33 | 0.141 | 0.48 | 0.157 | 0.119 | 1.053 | 0.022 | 0.398 | 0.129 | 0.079 | 1.56 | 685 | 0.0378 | 0.027 | -0.763 | 0.457 | 1.360 | 0.685 |
| 250T125-30 | 0.0312 | 33 | 0.156 | 0.53 | 0.173 | 0.131 | 1.053 | 0.025 | 0.397 | 0.146 | 0.090 | 1.77 | 833 | 0.0506 | 0.030 | -0.762 | 0.456 | 1.359 | 0.686 |
| 250T125-33 | 0.0346 | 33 | 0.173 | 0.59 | 0.192 | 0.145 | 1.054 | 0.027 | 0.397 | 0.166 | 0.103 | 2.04 | 1024 | 0.0690 | 0.033 | -0.760 | 0.456 | 1.358 | 0.687 |
| 250T125-43 | 0.0451 | 33 | 0.225 | 0.77 | 0.250 | 0.188 | 1.055 | 0.035 | 0.395 | 0.231 | 0.148 | 2.92 | 1356 | 0.1526 | 0.042 | -0.755 | 0.453 | 1.356 | 0.690 |
| 250T125-54 | 0.0566 | 33 | 0.282 | 0.96 | 0.318 | 0.236 | 1.062 | 0.043 | 0.392 | 0.311 | 0.204 | 4.03 | 1692 | 0.3015 | 0.054 | -0.749 | 0.449 | 1.357 | 0.696 |
| 250T125-54 | 0.0566 | 50 | 0.282 | 0.96 | 0.318 | 0.236 | 1.062 | 0.043 | 0.392 | 0.297 | 0.189 | 5.66 | 2563 | 0.3015 | 0.054 | -0.749 | 0.449 | 1.357 | 0.696 |
| 250T125-68 | 0.0713 | 33 | 0.355 | 1.21 | 0.409 | 0.297 | 1.072 | 0.054 | 0.389 | 0.409 | 0.283 | 5.58 | 2112 | 0.6022 | 0.069 | -0.740 | 0.444 | 1.360 | 0.704 |
| 250T125-68 | 0.0713 | 50 | 0.355 | 1.21 | 0.409 | 0.297 | 1.072 | 0.054 | 0.389 | 0.404 | 0.263 | 7.89 | 3199 | 0.6022 | 0.069 | -0.740 | 0.444 | 1.360 | 0.704 |
| 250T150-27 | 0.0283 | 33 | 0.156 | 0.53 | 0.181 | 0.137 | 1.078 | 0.037 | 0.486 | 0.139 | 0.082 | 1.61 | 685 | 0.0415 | 0.044 | -0.976 | 0.575 | 1.534 | 0.595 |
| 250T150-30 | 0.0312 | 33 | 0.172 | 0.58 | 0.200 | 0.151 | 1.078 | 0.040 | 0.486 | 0.157 | 0.093 | 1.84 | 833 | 0.0557 | 0.049 | -0.975 | 0.574 | 1.533 | 0.595 |
| 250T150-33 | 0.0346 | 33 | 0.190 | 0.65 | 0.221 | 0.167 | 1.079 | 0.045 | 0.485 | 0.180 | 0.107 | 2.11 | 1024 | 0.0759 | 0.054 | -0.973 | 0.573 | 1.532 | 0.596 |
| 250T150-43 | 0.0451 | 33 | 0.248 | 0.84 | 0.289 | 0.217 | 1.080 | 0.058 | 0.483 | 0.253 | 0.154 | 3.04 | 1356 | 0.1679 | 0.070 | -0.968 | 0.570 | 1.529 | 0.599 |
| 250T150-54 | 0.0566 | 33 | 0.311 | 1.06 | 0.368 | 0.273 | 1.088 | 0.072 | 0.481 | 0.343 | 0.214 | 4.24 | 1692 | 0.3317 | 0.089 | -0.961 | 0.566 | 1.530 | 0.605 |
| 250T150-54 | 0.0566 | 50 | 0.311 | 1.06 | 0.368 | 0.273 | 1.088 | 0.072 | 0.481 | 0.325 | 0.198 | 5.92 | 2563 | 0.3317 | 0.089 | -0.961 | 0.566 | 1.530 | 0.605 |
| 250T150-68 | 0.0713 | 33 | 0.391 | 1.33 | 0.472 | 0.344 | 1.099 | 0.089 | 0.478 | 0.467 | 0.301 | 5.95 | 2112 | 0.6627 | 0.114 | -0.953 | 0.561 | 1.531 | 0.613 |
| 250T150-68 | 0.0713 | 50 | 0.391 | 1.33 | 0.472 | 0.344 | 1.099 | 0.089 | 0.478 | 0.447 | 0.278 | 8.32 | 3199 | 0.6627 | 0.114 | -0.953 | 0.561 | 1.531 | 0.613 |
| 250T200-33 | 0.0346 | 33 | 0.225 | 0.76 | 0.280 | 0.212 | 1.117 | 0.097 | 0.658 | 0.203 | 0.113 | 2.23 | 1024 | 0.0897 | 0.118 | -1.418 | 0.813 | 1.922 | 0.455 |
| 250T200-43 | 0.0451 | 33 | 0.293 | 1.00 | 0.366 | 0.275 | 1.119 | 0.126 | 0.656 | 0.289 | 0.163 | 3.22 | 1356 | 0.1985 | 0.153 | -1.413 | 0.810 | 1.918 | 0.457 |
| 250T200-54 | 0.0566 | 33 | 0.367 | 1.25 | 0.466 | 0.346 | 1.127 | 0.157 | 0.654 | 0.397 | 0.229 | 4.53 | 1692 | 0.3921 | 0.195 | -1.405 | 0.806 | 1.917 | 0.462 |
| 250T200-54 | 0.0566 | 50 | 0.367 | 1.25 | 0.466 | 0.346 | 1.127 | 0.157 | 0.654 | 0.373 | 0.210 | 6.28 | 2563 | 0.3921 | 0.195 | -1.405 | 0.806 | 1.917 | 0.462 |
| 250T200-68 | 0.0713 | 33 | 0.462 | 1.57 | 0.600 | 0.437 | 1.139 | 0.196 | 0.652 | 0.550 | 0.326 | 6.45 | 2112 | 0.7835 | 0.251 | -1.396 | 0.800 | 1.916 | 0.469 |
| 250T200-68 | 0.0713 | 50 | 0.462 | 1.57 | 0.600 | 0.437 | 1.139 | 0.196 | 0.652 | 0.519 | 0.298 | 8.91 | 3199 | 0.7835 | 0.251 | -1.396 | 0.800 | 1.916 | 0.469 |
| 350T125-18 | 0.0188 | 33 | 0.113 | 0.38 | 0.220 | 0.121 | 1.395 | 0.017 | 0.382 | 0.174 | 0.062 | 1.02 | 173 | 0.0133 | 0.038 | -0.675 | 0.418 | 1.596 | 0.821 |
| 350T125-27 | 0.0283 | 33 | 0.170 | 0.58 | 0.331 | 0.182 | 1.396 | 0.025 | 0.381 | 0.278 | 0.128 | 2.53 | 590 | 0.0453 | 0.057 | -0.670 | 0.416 | 1.595 | 0.823 |
| 350T125-30 | 0.0312 | 33 | 0.187 | 0.64 | 0.365 | 0.200 | 1.396 | 0.027 | 0.380 | 0.313 | 0.145 | 2.87 | 790 | 0.0607 | 0.063 | -0.669 | 0.415 | 1.594 | 0.824 |
| 350T125-33 | 0.0346 | 33 | 0.207 | 0.71 | 0.405 | 0.222 | 1.397 | 0.030 | 0.379 | 0.355 | 0.166 | 3.27 | 1024 | 0.0828 | 0.070 | -0.668 | 0.414 | 1.594 | 0.824 |
| 350T125-43 | 0.0451 | 33 | 0.270 | 0.92 | 0.528 | 0.288 | 1.398 | 0.038 | 0.377 | 0.490 | 0.234 | 4.61 | 1740 | 0.1832 | 0.090 | -0.663 | 0.412 | 1.592 | 0.826 |
| 350T125-54 | 0.0566 | 33 | 0.339 | 1.15 | 0.668 | 0.361 | 1.404 | 0.048 | 0.375 | 0.652 | 0.318 | 6.28 | 2392 | 0.3619 | 0.114 | -0.658 | 0.408 | 1.595 | 0.830 |
| 350T125-54 | 0.0566 | 50 | 0.339 | 1.15 | 0.668 | 0.361 | 1.404 | 0.048 | 0.375 | 0.627 | 0.298 | 8.92 | 3372 | 0.3619 | 0.114 | -0.658 | 0.408 | 1.595 | 0.830 |
| 350T125-68 | 0.0713 | 33 | 0.427 | 1.45 | 0.851 | 0.454 | 1.412 | 0.059 | 0.372 | 0.851 | 0.434 | 8.57 | 2994 | 0.7231 | 0.144 | -0.650 | 0.403 | 1.599 | 0.835 |
| 350T125-68 | 0.0713 | 50 | 0.427 | 1.45 | 0.851 | 0.454 | 1.412 | 0.059 | 0.372 | 0.840 | 0.408 | 12.22 | 4536 | 0.7231 | 0.144 | -0.650 | 0.403 | 1.599 | 0.835 |
| 350T125-97 | 0.1017 | 33 | 0.608 | 2.07 | 1.243 | 0.645 | 1.430 | 0.081 | 0.366 | 1.244 | 0.645 | 14.57 | 4213 | 2.0960 | 0.209 | -0.636 | 0.394 | 1.607 | 0.844 |
| 350T125-97 | 0.1017 | 50 | 0.608 | 2.07 | 1.243 | 0.645 | 1.430 | 0.081 | 0.366 | 1.244 | 0.645 | 21.51 | 6383 | 2.0960 | 0.209 | -0.636 | 0.394 | 1.607 | 0.844 |
| 350T150-27 | 0.0283 | 33 | 0.184 | 0.63 | 0.377 | 0.207 | 1.432 | 0.041 | 0.470 | 0.298 | 0.133 | 2.62 | 590 | 0.0491 | 0.094 | -0.869 | 0.529 | 1.739 | 0.751 |
| 350T150-30 | 0.0312 | 33 | 0.203 | 0.69 | 0.416 | 0.228 | 1.432 | 0.045 | 0.470 | 0.336 | 0.150 | 2.97 | 790 | 0.0658 | 0.103 | -0.867 | 0.528 | 1.739 | 0.751 |
| 350T150-33 | 0.0346 | 33 | 0.225 | 0.76 | 0.461 | 0.253 | 1.432 | 0.049 | 0.469 | 0.382 | 0.172 | 3.39 | 1024 | 0.0897 | 0.114 | -0.866 | 0.527 | 1.738 | 0.752 |
| 350T150-43 | 0.0451 | 33 | 0.293 | 1.00 | 0.601 | 0.329 | 1.433 | 0.064 | 0.467 | 0.531 | 0.243 | 4.81 | 1740 | 0.1985 | 0.148 | -0.861 | 0.525 | 1.736 | 0.754 |
| 350T150-54 | 0.0566 | 33 | 0.367 | 1.25 | 0.762 | 0.412 | 1.440 | 0.079 | 0.465 | 0.713 | 0.333 | 6.59 | 2392 | 0.3921 | 0.187 | -0.855 | 0.521 | 1.738 | 0.758 |
| 350T150-54 | 0.0566 | 50 | 0.367 | 1.25 | 0.762 | 0.412 | 1.440 | 0.079 | 0.465 | 0.680 | 0.311 | 9.30 | 3372 | 0.3921 | 0.187 | -0.855 | 0.521 | 1.738 | 0.758 |
| 350T150-68 | 0.0713 | 33 | 0.462 | 1.57 | 0.972 | 0.518 | 1.450 | 0.099 | 0.462 | 0.959 | 0.460 | 9.10 | 2994 | 0.7835 | 0.238 | -0.847 | 0.516 | 1.742 | 0.763 |
| 350T150-68 | 0.0713 | 50 | 0.462 | 1.57 | 0.972 | 0.518 | 1.450 | 0.099 | 0.462 | 0.921 | 0.429 | 12.85 | 4536 | 0.7835 | 0.238 | -0.847 | 0.516 | 1.742 | 0.763 |
| 350T150-97 | 0.1017 | 33 | 0.659 | 2.24 | 1.423 | 0.738 | 1.469 | 0.137 | 0.456 | 1.423 | 0.738 | 15.72 | 4213 | 2.2713 | 0.346 | -0.831 | 0.506 | 1.749 | 0.774 |
| 350T150-97 | 0.1017 | 50 | 0.659 | 2.24 | 1.423 | 0.738 | 1.469 | 0.137 | 0.456 | 1.423 | 0.704 | 21.08 | 6383 | 2.2713 | 0.346 | -0.831 | 0.506 | 1.749 | 0.774 |
| 350T200-33 | 0.0346 | 33 | 0.259 | 0.88 | 0.574 | 0.315 | 1.488 | 0.108 | 0.646 | 0.429 | 0.181 | 3.58 | 1024 | 0.1035 | 0.249 | -1.285 | 0.761 | 2.069 | 0.614 |
| 350T200-43 | 0.0451 | 33 | 0.338 | 1.15 | 0.749 | 0.409 | 1.489 | 0.140 | 0.645 | 0.601 | 0.258 | 5.10 | 1740 | 0.2291 | 0.323 | -1.280 | 0.758 | 2.067 | 0.616 |
| 350T200-54 | 0.0566 | 33 | 0.424 | 1.44 | 0.949 | 0.513 | 1.497 | 0.175 | 0.642 | 0.815 | 0.356 | 7.03 | 2392 | 0.4526 | 0.409 | -1.273 | 0.754 | 2.067 | 0.621 |
| 350T200-54 | 0.0566 | 50 | 0.424 | 1.44 | 0.949 | 0.513 | 1.497 | 0.175 | 0.642 | 0.771 | 0.330 | 9.87 | 3372 | 0.4526 | 0.409 | -1.273 | 0.754 | 2.067 | 0.621 |
| 350T200-68 | 0.0713 | 33 | 0.534 | 1.82 | 1.213 | 0.647 | 1.508 | 0.218 | 0.639 | 1.114 | 0.498 | 9.84 | 2994 | 0.9043 | 0.522 | -1.264 | 0.749 | 2.069 | 0.627 |
| 350T200-68 | 0.0713 | 50 | 0.534 | 1.82 | 1.213 | 0.647 | 1.508 | 0.218 | 0.639 | 1.057 | 0.460 | 13.76 | 4536 | 0.9043 | 0.522 | -1.264 | 0.749 | 2.069 | 0.627 |
| 350T200-97 | 0.1017 | 33 | 0.761 | 2.59 | 1.781 | 0.924 | 1.530 | 0.305 | 0.633 | 1.782 | 0.835 | 16.50 | 4213 | 2.6219 | 0.765 | -1.247 | 0.738 | 2.073 | 0.638 |
| 350T200-97 | 0.1017 | 50 | 0.761 | 2.59 | 1.781 | 0.924 | 1.530 | 0.305 | 0.633 | 1.713 | 0.773 | 23.14 | 6383 | 2.6219 | 0.765 | -1.247 | 0.738 | 2.073 | 0.638 |

**1** Web-height to thickness ratio exceeds 200. Web stiffeners are required at all support points and concentrated loads.

See Section Properties Table Notes

# (T) Track Section Properties

| Member | Design Thickness (in) | Fy (ksi) | Gross Properties | | | | | | | Effective Properties | | | | Torsional Properties | | | | | |
|---|---|---|---|---|---|---|---|---|---|---|---|---|---|---|---|---|---|---|---|
| | | | Area ($in^2$) | Weight (lb/ft) | $I_x$ ($in^4$) | $S_x$ ($in^3$) | $R_x$ (in) | $I_y$ ($in^4$) | $R_y$ (in) | $I_x$ ($in^4$) | $S_x$ ($in^3$) | $M_a$ (in-k) | $Va_a$ (lb) | Jx1000 (in4) | $C_w$ ($in^6$) | $X_o$ (in) | m (in) | $R_o$ (in) | β |
| 362T125-18 | 0.0188 | 33 | 0.115 | 0.39 | 0.238 | 0.127 | 1.437 | 0.017 | 0.380 | 0.189 | 0.064 | 1.05 | 167 | 0.0136 | 0.042 | -0.665 | 0.413 | 1.628 | 0.833 |
| 362T125-27 | 0.0283 | 33 | 0.173 | 0.59 | 0.358 | 0.191 | 1.438 | 0.025 | 0.378 | 0.301 | 0.135 | 2.67 | 569 | 0.0463 | 0.062 | -0.661 | 0.411 | 1.627 | 0.835 |
| 362T125-30 | 0.0312 | 33 | 0.191 | 0.65 | 0.395 | 0.210 | 1.438 | 0.027 | 0.378 | 0.339 | 0.153 | 3.02 | 762 | 0.0620 | 0.068 | -0.659 | 0.410 | 1.627 | 0.836 |
| 362T125-33 | 0.0346 | 33 | 0.212 | 0.72 | 0.438 | 0.232 | 1.439 | 0.030 | 0.377 | 0.385 | 0.174 | 3.44 | 1024 | 0.0845 | 0.076 | -0.658 | 0.410 | 1.626 | 0.836 |
| 362T125-43 | 0.0451 | 33 | 0.276 | 0.94 | 0.571 | 0.302 | 1.439 | 0.039 | 0.375 | 0.531 | 0.245 | 4.85 | 1740 | 0.1870 | 0.098 | -0.654 | 0.407 | 1.625 | 0.838 |
| 362T125-54 | 0.0566 | 33 | 0.346 | 1.18 | 0.723 | 0.378 | 1.445 | 0.048 | 0.373 | 0.706 | 0.333 | 6.59 | 2480 | 0.3695 | 0.123 | -0.648 | 0.404 | 1.627 | 0.841 |
| 362T125-54 | 0.0566 | 50 | 0.346 | 1.18 | 0.723 | 0.378 | 1.445 | 0.048 | 0.373 | 0.679 | 0.313 | 9.36 | 3372 | 0.3695 | 0.123 | -0.648 | 0.404 | 1.627 | 0.841 |
| 362T125-68 | 0.0713 | 33 | 0.436 | 1.48 | 0.921 | 0.475 | 1.454 | 0.060 | 0.370 | 0.921 | 0.455 | 8.98 | 3104 | 0.7382 | 0.156 | -0.641 | 0.399 | 1.631 | 0.846 |
| 362T125-68 | 0.0713 | 50 | 0.436 | 1.48 | 0.921 | 0.475 | 1.454 | 0.060 | 0.370 | 0.909 | 0.428 | 12.82 | 4703 | 0.7382 | 0.156 | -0.641 | 0.399 | 1.631 | 0.846 |
| 362T125-97 | 0.1017 | 33 | 0.621 | 2.11 | 1.344 | 0.675 | 1.471 | 0.082 | 0.364 | 1.344 | 0.675 | 15.25 | 4370 | 2.1398 | 0.226 | -0.626 | 0.390 | 1.640 | 0.854 |
| 362T125-97 | 0.1017 | 50 | 0.621 | 2.11 | 1.344 | 0.675 | 1.471 | 0.082 | 0.364 | 1.344 | 0.675 | 22.49 | 6622 | 2.1398 | 0.226 | -0.626 | 0.390 | 1.640 | 0.854 |
| 362T150-27 | 0.0283 | 33 | 0.187 | 0.64 | 0.408 | 0.217 | 1.475 | 0.041 | 0.468 | 0.323 | 0.140 | 2.76 | 569 | 0.0500 | 0.102 | -0.857 | 0.524 | 1.769 | 0.765 |
| 362T150-30 | 0.0312 | 33 | 0.207 | 0.70 | 0.450 | 0.239 | 1.475 | 0.045 | 0.467 | 0.364 | 0.158 | 3.12 | 762 | 0.0670 | 0.112 | -0.856 | 0.523 | 1.768 | 0.766 |
| 362T150-33 | 0.0346 | 33 | 0.229 | 0.78 | 0.499 | 0.264 | 1.475 | 0.050 | 0.467 | 0.414 | 0.181 | 3.57 | 1024 | 0.0914 | 0.124 | -0.854 | 0.522 | 1.768 | 0.766 |
| 362T150-43 | 0.0451 | 33 | 0.298 | 1.02 | 0.650 | 0.344 | 1.476 | 0.064 | 0.465 | 0.575 | 0.256 | 5.05 | 1740 | 0.2023 | 0.160 | -0.850 | 0.519 | 1.766 | 0.768 |
| 362T150-54 | 0.0566 | 33 | 0.374 | 1.27 | 0.823 | 0.431 | 1.483 | 0.080 | 0.462 | 0.771 | 0.350 | 6.91 | 2480 | 0.3997 | 0.202 | -0.844 | 0.516 | 1.768 | 0.772 |
| 362T150-54 | 0.0566 | 50 | 0.374 | 1.27 | 0.823 | 0.431 | 1.483 | 0.080 | 0.462 | 0.736 | 0.326 | 9.77 | 3372 | 0.3997 | 0.202 | -0.844 | 0.516 | 1.768 | 0.772 |
| 362T150-68 | 0.0713 | 33 | 0.471 | 1.60 | 1.050 | 0.542 | 1.493 | 0.100 | 0.460 | 1.036 | 0.482 | 9.53 | 3104 | 0.7986 | 0.257 | -0.836 | 0.511 | 1.771 | 0.777 |
| 362T150-68 | 0.0713 | 50 | 0.471 | 1.60 | 1.050 | 0.542 | 1.493 | 0.100 | 0.460 | 0.995 | 0.450 | 13.47 | 4703 | 0.7986 | 0.257 | -0.836 | 0.511 | 1.771 | 0.777 |
| 362T150-97 | 0.1017 | 33 | 0.672 | 2.28 | 1.535 | 0.771 | 1.512 | 0.138 | 0.453 | 1.536 | 0.771 | 16.41 | 4370 | 2.3152 | 0.374 | -0.820 | 0.501 | 1.779 | 0.787 |
| 362T150-97 | 0.1017 | 50 | 0.672 | 2.28 | 1.535 | 0.771 | 1.512 | 0.138 | 0.453 | 1.536 | 0.736 | 22.04 | 6622 | 2.3152 | 0.374 | -0.820 | 0.501 | 1.779 | 0.787 |
| 362T200-33 | 0.0346 | 33 | 0.264 | 0.90 | 0.619 | 0.329 | 1.533 | 0.110 | 0.645 | 0.464 | 0.191 | 3.76 | 1024 | 0.1052 | 0.269 | -1.270 | 0.754 | 2.092 | 0.631 |
| 362T200-43 | 0.0451 | 33 | 0.343 | 1.17 | 0.808 | 0.427 | 1.534 | 0.142 | 0.643 | 0.650 | 0.271 | 5.35 | 1740 | 0.2329 | 0.350 | -1.265 | 0.752 | 2.090 | 0.633 |
| 362T200-54 | 0.0566 | 33 | 0.431 | 1.47 | 1.024 | 0.536 | 1.542 | 0.177 | 0.640 | 0.881 | 0.373 | 7.37 | 2480 | 0.4601 | 0.442 | -1.259 | 0.748 | 2.091 | 0.638 |
| 362T200-54 | 0.0566 | 50 | 0.431 | 1.47 | 1.024 | 0.536 | 1.542 | 0.177 | 0.640 | 0.833 | 0.346 | 10.37 | 3372 | 0.4601 | 0.442 | -1.259 | 0.748 | 2.091 | 0.638 |
| 362T200-68 | 0.0713 | 33 | 0.543 | 1.85 | 1.308 | 0.675 | 1.552 | 0.221 | 0.638 | 1.202 | 0.521 | 10.30 | 3104 | 0.9194 | 0.564 | -1.250 | 0.743 | 2.093 | 0.643 |
| 362T200-68 | 0.0713 | 50 | 0.543 | 1.85 | 1.308 | 0.675 | 1.552 | 0.221 | 0.638 | 1.141 | 0.482 | 14.42 | 4703 | 0.9194 | 0.564 | -1.250 | 0.743 | 2.093 | 0.643 |
| 362T200-97 | 0.1017 | 33 | 0.773 | 2.63 | 1.917 | 0.963 | 1.575 | 0.308 | 0.632 | 1.918 | 0.872 | 17.23 | 4370 | 2.6658 | 0.825 | -1.232 | 0.732 | 2.097 | 0.655 |
| 362T200-97 | 0.1017 | 50 | 0.773 | 2.63 | 1.917 | 0.963 | 1.575 | 0.308 | 0.632 | 1.845 | 0.808 | 24.18 | 6622 | 2.6658 | 0.825 | -1.232 | 0.732 | 2.097 | 0.655 |
| 400T125-181 | 0.0188 | 33 | 0.122 | 0.42 | 0.298 | 0.145 | 1.562 | 0.017 | 0.374 | 0.241 | 0.070 | 1.16 | 151 | 0.0144 | 0.052 | -0.637 | 0.400 | 1.727 | 0.864 |
| 400T125-27 | 0.0283 | 33 | 0.184 | 0.63 | 0.449 | 0.217 | 1.562 | 0.025 | 0.372 | 0.380 | 0.156 | 3.08 | 515 | 0.0491 | 0.078 | -0.633 | 0.398 | 1.726 | 0.866 |
| 400T125-30 | 0.0312 | 33 | 0.203 | 0.69 | 0.495 | 0.239 | 1.563 | 0.028 | 0.371 | 0.427 | 0.177 | 3.49 | 689 | 0.0658 | 0.085 | -0.632 | 0.397 | 1.726 | 0.866 |
| 400T125-33 | 0.0346 | 33 | 0.225 | 0.76 | 0.549 | 0.265 | 1.563 | 0.031 | 0.371 | 0.484 | 0.201 | 3.98 | 939 | 0.0897 | 0.095 | -0.630 | 0.396 | 1.725 | 0.867 |
| 400T125-43 | 0.0451 | 33 | 0.293 | 1.00 | 0.716 | 0.344 | 1.564 | 0.040 | 0.369 | 0.667 | 0.282 | 5.58 | 1740 | 0.1985 | 0.122 | -0.626 | 0.394 | 1.724 | 0.868 |
| 400T125-54 | 0.0566 | 33 | 0.367 | 1.25 | 0.904 | 0.431 | 1.569 | 0.049 | 0.366 | 0.884 | 0.382 | 7.54 | 2740 | 0.3921 | 0.154 | -0.621 | 0.390 | 1.727 | 0.871 |
| 400T125-54 | 0.0566 | 50 | 0.367 | 1.25 | 0.904 | 0.431 | 1.569 | 0.049 | 0.366 | 0.851 | 0.359 | 10.76 | 3372 | 0.3921 | 0.154 | -0.621 | 0.390 | 1.727 | 0.871 |
| 400T125-68 | 0.0713 | 33 | 0.462 | 1.57 | 1.151 | 0.541 | 1.577 | 0.061 | 0.364 | 1.151 | 0.519 | 10.25 | 3435 | 0.7835 | 0.194 | -0.614 | 0.386 | 1.731 | 0.874 |
| 400T125-68 | 0.0713 | 50 | 0.462 | 1.57 | 1.151 | 0.541 | 1.577 | 0.061 | 0.364 | 1.136 | 0.490 | 14.66 | 5205 | 0.7835 | 0.194 | -0.614 | 0.386 | 1.731 | 0.874 |
| 400T125-97 | 0.1017 | 33 | 0.659 | 2.24 | 1.674 | 0.768 | 1.594 | 0.084 | 0.358 | 1.674 | 0.769 | 17.36 | 4842 | 2.2713 | 0.280 | -0.600 | 0.377 | 1.740 | 0.881 |
| 400T125-97 | 0.1017 | 50 | 0.659 | 2.24 | 1.674 | 0.768 | 1.594 | 0.084 | 0.358 | 1.674 | 0.769 | 25.54 | 7337 | 2.2713 | 0.280 | -0.600 | 0.377 | 1.740 | 0.881 |
| 400T150-27 | 0.0283 | 33 | 0.198 | 0.67 | 0.509 | 0.246 | 1.602 | 0.042 | 0.461 | 0.409 | 0.154 | 3.05 | 515 | 0.0529 | 0.127 | -0.824 | 0.509 | 1.860 | 0.804 |
| 400T150-30 | 0.0312 | 33 | 0.218 | 0.74 | 0.561 | 0.271 | 1.603 | 0.046 | 0.461 | 0.458 | 0.183 | 3.61 | 689 | 0.0708 | 0.140 | -0.823 | 0.508 | 1.860 | 0.804 |
| 400T150-33 | 0.0346 | 33 | 0.242 | 0.82 | 0.622 | 0.300 | 1.603 | 0.051 | 0.460 | 0.520 | 0.209 | 4.12 | 939 | 0.0966 | 0.155 | -0.821 | 0.507 | 1.859 | 0.805 |
| 400T150-43 | 0.0451 | 33 | 0.315 | 1.07 | 0.811 | 0.390 | 1.604 | 0.066 | 0.458 | 0.720 | 0.294 | 5.81 | 1740 | 0.2138 | 0.200 | -0.817 | 0.504 | 1.857 | 0.807 |
| 400T150-54 | 0.0566 | 33 | 0.396 | 1.35 | 1.026 | 0.489 | 1.610 | 0.082 | 0.456 | 0.962 | 0.400 | 7.90 | 2740 | 0.4223 | 0.252 | -0.811 | 0.501 | 1.860 | 0.810 |
| 400T150-54 | 0.0566 | 50 | 0.396 | 1.35 | 1.026 | 0.489 | 1.610 | 0.082 | 0.456 | 0.920 | 0.375 | 11.22 | 3372 | 0.4223 | 0.252 | -0.811 | 0.501 | 1.860 | 0.810 |
| 400T150-68 | 0.0713 | 33 | 0.498 | 1.69 | 1.306 | 0.615 | 1.619 | 0.102 | 0.453 | 1.288 | 0.549 | 10.85 | 3435 | 0.8439 | 0.320 | -0.804 | 0.496 | 1.864 | 0.814 |
| 400T150-68 | 0.0713 | 50 | 0.498 | 1.69 | 1.306 | 0.615 | 1.619 | 0.102 | 0.453 | 1.239 | 0.514 | 15.40 | 5205 | 0.8439 | 0.320 | -0.804 | 0.496 | 1.864 | 0.814 |
| 400T150-97 | 0.1017 | 33 | 0.710 | 2.41 | 1.904 | 0.874 | 1.638 | 0.142 | 0.447 | 1.904 | 0.874 | 18.56 | 4842 | 2.4466 | 0.463 | -0.788 | 0.487 | 1.872 | 0.823 |
| 400T150-97 | 0.1017 | 50 | 0.710 | 2.41 | 1.904 | 0.874 | 1.638 | 0.142 | 0.447 | 1.904 | 0.836 | 25.02 | 7337 | 2.4466 | 0.463 | -0.788 | 0.487 | 1.872 | 0.823 |

**1** Web-height to thickness ratio exceeds 200. Web Stiffeners are required at all support points and concentrated loads.

**2** When web height-to thickness ratio exceeds 260, or flange width-to-thickness rato exceeds 60, effective properties are not calculated (limitations in AISI Section B4.1).

See Section Properties Table Notes

# (T) Track Section Properties

| Member | Design Thickness (in) | Fy (ksi) | Gross Properties | | | | | | | Effective Properties | | | | Torsional Properties | | | | | |
|---|---|---|---|---|---|---|---|---|---|---|---|---|---|---|---|---|---|---|---|
| | | | Area ($in^2$) | Weight (lb/ft) | $I_x$ ($in^4$) | $S_x$ ($in^3$) | $R_x$ (in) | $I_y$ ($in^4$) | $R_y$ (in) | $I_x$ ($in^4$) | $S_x$ ($in^3$) | $M_a$ (in-k) | $Va_a$ (lb) | Jx1000 (in4) | $C_w$ ($in^6$) | $X_o$ (in) | m (in) | $R_o$ (in) | β |
| 400T200-33 | 0.0346 | 33 | 0.277 | 0.94 | 0.768 | 0.371 | 1.666 | 0.113 | 0.639 | 0.581 | 0.220 | 4.35 | 939 | 0.1104 | 0.336 | -1.229 | 0.737 | 2.167 | 0.678 |
| 400T200-43 | 0.0451 | 33 | 0.360 | 1.23 | 1.002 | 0.482 | 1.668 | 0.146 | 0.637 | 0.812 | 0.311 | 6.15 | 1740 | 0.2443 | 0.436 | -1.224 | 0.734 | 2.164 | 0.680 |
| 400T200-54 | 0.0566 | 33 | 0.452 | 1.54 | 1.268 | 0.604 | 1.675 | 0.182 | 0.635 | 1.095 | 0.427 | 8.44 | 2740 | 0.4828 | 0.551 | -1.217 | 0.730 | 2.166 | 0.684 |
| 400T200-54 | 0.0566 | 50 | 0.452 | 1.54 | 1.268 | 0.604 | 1.675 | 0.182 | 0.635 | 1.038 | 0.398 | 11.90 | 3372 | 0.4828 | 0.551 | -1.217 | 0.730 | 2.166 | 0.684 |
| 400T200-68 | 0.0713 | 33 | 0.569 | 1.94 | 1.617 | 0.761 | 1.685 | 0.227 | 0.632 | 1.488 | 0.593 | 11.72 | 3435 | 0.9647 | 0.702 | -1.209 | 0.725 | 2.168 | 0.689 |
| 400T200-68 | 0.0713 | 50 | 0.569 | 1.94 | 1.617 | 0.761 | 1.685 | 0.227 | 0.632 | 1.415 | 0.550 | 16.47 | 5205 | 0.9647 | 0.702 | -1.209 | 0.725 | 2.168 | 0.689 |
| 400T200-97 | 0.1017 | 33 | 0.811 | 2.76 | 2.364 | 1.085 | 1.707 | 0.318 | 0.626 | 2.365 | 0.985 | 19.47 | 4842 | 2.7973 | 1.022 | -1.192 | 0.715 | 2.174 | 0.699 |
| 400T200-97 | 0.1017 | 50 | 0.811 | 2.76 | 2.364 | 1.085 | 1.707 | 0.318 | 0.626 | 2.275 | 0.915 | 27.41 | 7337 | 2.7973 | 1.022 | -1.192 | 0.715 | 2.174 | 0.699 |
| 550T125-27 | 0.0283 | 33 | 0.226 | 0.77 | 0.948 | 0.336 | 2.046 | 0.027 | 0.348 | 0.786 | 0.192 | 3.79 | 372 | 0.0604 | 0.160 | -0.543 | 0.352 | 2.146 | 0.936 |
| 550T125-30 | 0.0312 | 33 | 0.250 | 0.85 | 1.045 | 0.371 | 2.047 | 0.030 | 0.347 | 0.897 | 0.227 | 4.48 | 499 | 0.0810 | 0.176 | -0.542 | 0.351 | 2.145 | 0.936 |
| 550T125-33 | 0.0346 | 33 | 0.277 | 0.94 | 1.159 | 0.411 | 2.047 | 0.033 | 0.346 | 1.029 | 0.270 | 5.33 | 680 | 0.1104 | 0.195 | -0.541 | 0.350 | 2.145 | 0.936 |
| 550T125-43 | 0.0451 | 33 | 0.360 | 1.23 | 1.510 | 0.534 | 2.047 | 0.043 | 0.344 | 1.429 | 0.417 | 8.24 | 1504 | 0.2443 | 0.252 | -0.537 | 0.348 | 2.144 | 0.937 |
| 550T125-54 | 0.0566 | 33 | 0.452 | 1.54 | 1.904 | 0.668 | 2.052 | 0.053 | 0.342 | 1.863 | 0.598 | 11.82 | 2740 | 0.4828 | 0.315 | -0.532 | 0.345 | 2.147 | 0.939 |
| 550T125-54 | 0.0566 | 50 | 0.452 | 1.54 | 1.904 | 0.668 | 2.052 | 0.053 | 0.342 | 1.813 | 0.535 | 16.03 | 2980 | 0.4828 | 0.315 | -0.532 | 0.345 | 2.147 | 0.939 |
| 550T125-68 | 0.0713 | 33 | 0.569 | 1.94 | 2.413 | 0.839 | 2.059 | 0.066 | 0.340 | 2.413 | 0.808 | 15.97 | 4348 | 0.9647 | 0.397 | -0.526 | 0.341 | 2.152 | 0.940 |
| 550T125-68 | 0.0713 | 50 | 0.569 | 1.94 | 2.413 | 0.839 | 2.059 | 0.066 | 0.340 | 2.382 | 0.770 | 23.06 | 5352 | 0.9647 | 0.397 | -0.526 | 0.341 | 2.152 | 0.940 |
| 550T125-97 | 0.1017 | 33 | 0.811 | 2.76 | 3.484 | 1.190 | 2.072 | 0.090 | 0.334 | 3.485 | 1.190 | 26.88 | 6730 | 2.7973 | 0.564 | -0.514 | 0.333 | 2.161 | 0.943 |
| 550T125-97 | 0.1017 | 50 | 0.811 | 2.76 | 3.484 | 1.190 | 2.072 | 0.090 | 0.334 | 3.485 | 1.190 | 39.31 | 10197 | 2.7973 | 0.564 | -0.514 | 0.333 | 2.161 | 0.943 |
| 550T150-27 | 0.0283 | 33 | 0.241 | 0.82 | 1.059 | 0.376 | 2.099 | 0.046 | 0.436 | 0.893 | 0.208 | 4.10 | 372 | 0.0642 | 0.263 | -0.716 | 0.456 | 2.260 | 0.900 |
| 550T150-30 | 0.0312 | 33 | 0.265 | 0.90 | 1.168 | 0.414 | 2.099 | 0.050 | 0.435 | 0.995 | 0.252 | 4.97 | 499 | 0.0860 | 0.289 | -0.715 | 0.455 | 2.259 | 0.900 |
| 550T150-33 | 0.0346 | 33 | 0.294 | 1.00 | 1.295 | 0.459 | 2.099 | 0.055 | 0.434 | 1.115 | 0.310 | 6.13 | 680 | 0.1173 | 0.320 | -0.714 | 0.455 | 2.259 | 0.900 |
| 550T150-43 | 0.0451 | 33 | 0.383 | 1.30 | 1.688 | 0.596 | 2.100 | 0.072 | 0.432 | 1.517 | 0.469 | 9.26 | 1504 | 0.2596 | 0.414 | -0.709 | 0.452 | 2.258 | 0.901 |
| 550T150-54 | 0.0566 | 33 | 0.480 | 1.63 | 2.129 | 0.747 | 2.105 | 0.089 | 0.430 | 2.007 | 0.629 | 12.43 | 2740 | 0.5130 | 0.519 | -0.704 | 0.449 | 2.261 | 0.903 |
| 550T150-54 | 0.0566 | 50 | 0.480 | 1.63 | 2.129 | 0.747 | 2.105 | 0.089 | 0.430 | 1.930 | 0.595 | 17.83 | 2980 | 0.5130 | 0.519 | -0.704 | 0.449 | 2.261 | 0.903 |
| 550T150-68 | 0.0713 | 33 | 0.605 | 2.06 | 2.700 | 0.939 | 2.113 | 0.111 | 0.427 | 2.663 | 0.852 | 16.83 | 4348 | 1.0251 | 0.655 | -0.698 | 0.445 | 2.266 | 0.905 |
| 550T150-68 | 0.0713 | 50 | 0.605 | 2.06 | 2.700 | 0.939 | 2.113 | 0.111 | 0.427 | 2.572 | 0.805 | 24.12 | 5352 | 1.0251 | 0.655 | -0.698 | 0.445 | 2.266 | 0.905 |
| 550T150-97 | 0.1017 | 33 | 0.862 | 2.93 | 3.905 | 1.334 | 2.128 | 0.153 | 0.421 | 3.906 | 1.334 | 28.14 | 6730 | 2.9726 | 0.937 | -0.684 | 0.436 | 2.275 | 0.909 |
| 550T150-97 | 0.1017 | 50 | 0.862 | 2.93 | 3.905 | 1.334 | 2.128 | 0.153 | 0.421 | 3.906 | 1.282 | 38.37 | 10197 | 2.9726 | 0.937 | -0.684 | 0.436 | 2.275 | 0.909 |
| 550T200-33 | 0.0346 | 33 | 0.329 | 1.12 | 1.567 | 0.555 | 2.184 | 0.123 | 0.613 | 1.246 | 0.307 | 6.07 | 680 | 0.1311 | 0.694 | -1.088 | 0.674 | 2.516 | 0.813 |
| 550T200-43 | 0.0451 | 33 | 0.428 | 1.46 | 2.044 | 0.722 | 2.185 | 0.160 | 0.611 | 1.691 | 0.496 | 9.80 | 1504 | 0.2902 | 0.900 | -1.083 | 0.671 | 2.514 | 0.814 |
| 550T200-54 | 0.0566 | 33 | 0.537 | 1.83 | 2.579 | 0.905 | 2.191 | 0.199 | 0.609 | 2.256 | 0.670 | 13.23 | 2740 | 0.5734 | 1.133 | -1.077 | 0.668 | 2.517 | 0.817 |
| 550T200-54 | 0.0566 | 50 | 0.537 | 1.83 | 2.579 | 0.905 | 2.191 | 0.199 | 0.609 | 2.155 | 0.631 | 18.88 | 2980 | 0.5734 | 1.133 | -1.077 | 0.668 | 2.517 | 0.817 |
| 550T200-68 | 0.0713 | 33 | 0.676 | 2.30 | 3.275 | 1.139 | 2.201 | 0.248 | 0.606 | 3.031 | 0.916 | 18.09 | 4348 | 1.1459 | 1.434 | -1.070 | 0.663 | 2.521 | 0.820 |
| 550T200-68 | 0.0713 | 50 | 0.676 | 2.30 | 3.275 | 1.139 | 2.201 | 0.248 | 0.606 | 2.898 | 0.859 | 25.72 | 5352 | 1.1459 | 1.434 | -1.070 | 0.663 | 2.521 | 0.820 |
| 550T200-97 | 0.1017 | 33 | 0.964 | 3.28 | 4.747 | 1.621 | 2.219 | 0.347 | 0.600 | 4.742 | 1.487 | 29.39 | 6730 | 3.3232 | 2.067 | -1.055 | 0.653 | 2.529 | 0.826 |
| 550T200-97 | 0.1017 | 50 | 0.964 | 3.28 | 4.747 | 1.621 | 2.219 | 0.347 | 0.600 | 4.574 | 1.395 | 41.76 | 10197 | 3.3232 | 2.067 | -1.055 | 0.653 | 2.529 | 0.826 |
| 600T125-271 | 0.0283 | 33 | 0.241 | 0.82 | 1.169 | 0.381 | 2.204 | 0.028 | 0.340 | 0.958 | 0.211 | 3.48 | 341 | 0.0642 | 0.196 | -0.519 | 0.339 | 2.290 | 0.949 |
| 600T125-30 | 0.0312 | 33 | 0.265 | 0.90 | 1.288 | 0.420 | 2.204 | 0.031 | 0.340 | 1.095 | 0.249 | 4.92 | 456 | 0.0860 | 0.215 | -0.518 | 0.338 | 2.290 | 0.949 |
| 600T125-33 | 0.0346 | 33 | 0.294 | 1.00 | 1.429 | 0.465 | 2.205 | 0.034 | 0.339 | 1.258 | 0.297 | 5.87 | 622 | 0.1173 | 0.238 | -0.516 | 0.337 | 2.289 | 0.949 |
| 600T125-43 | 0.0451 | 33 | 0.383 | 1.30 | 1.862 | 0.604 | 2.205 | 0.044 | 0.337 | 1.769 | 0.462 | 9.12 | 1377 | 0.2596 | 0.307 | -0.513 | 0.335 | 2.289 | 0.950 |
| 600T125-54 | 0.0566 | 33 | 0.480 | 1.63 | 2.345 | 0.757 | 2.209 | 0.054 | 0.335 | 2.301 | 0.666 | 13.17 | 2728 | 0.5130 | 0.384 | -0.508 | 0.332 | 2.292 | 0.951 |
| 600T125-54 | 0.0566 | 50 | 0.480 | 1.63 | 2.345 | 0.757 | 2.209 | 0.054 | 0.335 | 2.242 | 0.593 | 17.76 | 2728 | 0.5130 | 0.384 | -0.508 | 0.332 | 2.292 | 0.951 |
| 600T125-68 | 0.0713 | 33 | 0.605 | 2.06 | 2.970 | 0.951 | 2.216 | 0.067 | 0.332 | 2.970 | 0.917 | 18.12 | 4348 | 1.0251 | 0.483 | -0.503 | 0.329 | 2.296 | 0.952 |
| 600T125-68 | 0.0713 | 50 | 0.605 | 2.06 | 2.970 | 0.951 | 2.216 | 0.067 | 0.332 | 2.936 | 0.860 | 25.74 | 5352 | 1.0251 | 0.483 | -0.503 | 0.329 | 2.296 | 0.952 |
| 600T125-97 | 0.1017 | 33 | 0.862 | 2.93 | 4.282 | 1.348 | 2.229 | 0.092 | 0.327 | 4.282 | 1.348 | 30.44 | 7359 | 2.9726 | 0.685 | -0.491 | 0.321 | 2.305 | 0.955 |
| 600T125-97 | 0.1017 | 50 | 0.862 | 2.93 | 4.282 | 1.348 | 2.229 | 0.092 | 0.327 | 4.282 | 1.348 | 44.43 | 10888 | 2.9726 | 0.685 | -0.491 | 0.321 | 2.305 | 0.955 |
| 600T150-27[1] | 0.0283 | 33 | 0.255 | 0.87 | 1.301 | 0.424 | 2.260 | 0.047 | 0.427 | 1.012 | 0.214 | 3.53 | 341 | 0.0680 | 0.320 | -0.686 | 0.441 | 2.400 | 0.918 |
| 600T150-30 | 0.0312 | 33 | 0.281 | 0.96 | 1.434 | 0.467 | 2.260 | 0.051 | 0.427 | 1.159 | 0.254 | 5.01 | 456 | 0.0911 | 0.352 | -0.685 | 0.440 | 2.400 | 0.918 |
| 600T150-33 | 0.0346 | 33 | 0.311 | 1.06 | 1.590 | 0.517 | 2.260 | 0.057 | 0.426 | 1.335 | 0.303 | 5.99 | 622 | 0.1242 | 0.390 | -0.684 | 0.439 | 2.400 | 0.919 |
| 600T150-43 | 0.0451 | 33 | 0.405 | 1.38 | 2.073 | 0.673 | 2.261 | 0.073 | 0.424 | 1.891 | 0.474 | 9.37 | 1377 | 0.2749 | 0.504 | -0.680 | 0.437 | 2.399 | 0.920 |
| 600T150-54 | 0.0566 | 33 | 0.509 | 1.73 | 2.612 | 0.843 | 2.266 | 0.091 | 0.422 | 2.475 | 0.690 | 13.64 | 2728 | 0.5432 | 0.632 | -0.675 | 0.434 | 2.402 | 0.921 |
| 600T150-54 | 0.0566 | 50 | 0.509 | 1.73 | 2.612 | 0.843 | 2.266 | 0.091 | 0.422 | 2.402 | 0.610 | 18.27 | 2728 | 0.5432 | 0.632 | -0.675 | 0.434 | 2.402 | 0.921 |
| 600T150-68 | 0.0713 | 33 | 0.641 | 2.18 | 3.310 | 1.059 | 2.273 | 0.113 | 0.419 | 3.265 | 0.965 | 19.06 | 4348 | 1.0855 | 0.797 | -0.669 | 0.430 | 2.406 | 0.923 |
| 600T150-68 | 0.0713 | 50 | 0.641 | 2.18 | 3.310 | 1.059 | 2.273 | 0.113 | 0.419 | 3.165 | 0.893 | 26.72 | 5352 | 1.0855 | 0.797 | -0.669 | 0.430 | 2.406 | 0.923 |
| 600T150-97 | 0.1017 | 33 | 0.913 | 3.11 | 4.780 | 1.504 | 2.288 | 0.156 | 0.414 | 4.780 | 1.504 | 31.69 | 7359 | 3.1479 | 1.138 | -0.656 | 0.421 | 2.416 | 0.926 |
| 600T150-97 | 0.1017 | 50 | 0.913 | 3.11 | 4.780 | 1.504 | 2.288 | 0.156 | 0.414 | 4.780 | 1.447 | 43.33 | 10888 | 3.1479 | 1.138 | -0.656 | 0.421 | 2.416 | 0.926 |

**1** Web-height to thickness ratio exceeds 200. Web Stiffeners are required at all support points and concentrated loads.

**2** When web height-to thickness ratio exceeds 260, or flange width-to-thickness rato exceeds 60, effective properties are not calculated (limitations in AISI Section B4.1).

See Section Properties Table Notes

# (T) Track Section Properties

| Member | Design Thickness (in) | Fy (ksi) | Gross Properties | | | | | | | Effective Properties | | | | Torsional Properties | | | | | |
|---|---|---|---|---|---|---|---|---|---|---|---|---|---|---|---|---|---|---|---|
| | | | Area ($in^2$) | Weight (lb/ft) | $I_x$ ($in^4$) | $S_x$ ($in^3$) | $R_x$ (in) | $I_y$ ($in^4$) | $R_y$ (in) | $I_x$ ($in^4$) | $S_x$ ($in^3$) | $M_a$ (in-k) | $Va_g$ (lb) | Jx1000 (in4) | $C_w$ ($in^6$) | $X_o$ (in) | m (in) | $R_o$ (in) | β |
| 600T200-33 | 0.0346 | 33 | 0.346 | 1.18 | 1.913 | 0.623 | 2.352 | 0.126 | 0.604 | 1.542 | 0.334 | 6.59 | 622 | 0.1380 | 0.847 | -1.048 | 0.655 | 2.645 | 0.843 |
| 600T200-43 | 0.0451 | 33 | 0.451 | 1.53 | 2.494 | 0.810 | 2.353 | 0.163 | 0.602 | 2.077 | 0.565 | 11.17 | 1377 | 0.3055 | 1.098 | -1.044 | 0.652 | 2.644 | 0.844 |
| 600T200-54 | 0.0566 | 33 | 0.565 | 1.92 | 3.146 | 1.015 | 2.359 | 0.203 | 0.600 | 2.762 | 0.760 | 15.02 | 2728 | 0.6037 | 1.381 | -1.038 | 0.649 | 2.646 | 0.846 |
| 600T200-54 | 0.0566 | 50 | 0.565 | 1.92 | 3.146 | 1.015 | 2.359 | 0.203 | 0.600 | 2.643 | 0.718 | 21.51 | 2728 | 0.6037 | 1.381 | -1.038 | 0.649 | 2.646 | 0.846 |
| 600T200-68 | 0.0713 | 33 | 0.712 | 2.42 | 3.991 | 1.277 | 2.368 | 0.254 | 0.597 | 3.700 | 1.035 | 20.46 | 4348 | 1.2064 | 1.746 | -1.031 | 0.644 | 2.651 | 0.849 |
| 600T200-68 | 0.0713 | 50 | 0.712 | 2.42 | 3.991 | 1.277 | 2.368 | 0.254 | 0.597 | 3.544 | 0.974 | 29.17 | 5352 | 1.2064 | 1.746 | -1.031 | 0.644 | 2.651 | 0.849 |
| 600T200-97 | 0.1017 | 33 | 1.015 | 3.45 | 5.774 | 1.817 | 2.385 | 0.355 | 0.591 | 5.766 | 1.672 | 33.03 | 7359 | 3.4985 | 2.510 | -1.016 | 0.635 | 2.659 | 0.854 |
| 600T200-97 | 0.1017 | 50 | 1.015 | 3.45 | 5.774 | 1.817 | 2.385 | 0.355 | 0.591 | 5.567 | 1.572 | 47.07 | 10888 | 3.4985 | 2.510 | -1.016 | 0.635 | 2.659 | 0.854 |
| 800T125-33[1] | 0.0346 | 33 | 0.363 | 1.24 | 2.897 | 0.711 | 2.824 | 0.036 | 0.313 | 2.441 | 0.407 | 6.71 | 465 | 0.1449 | 0.456 | -0.439 | 0.294 | 2.875 | 0.977 |
| 800T125-43 | 0.0451 | 33 | 0.473 | 1.61 | 3.774 | 0.925 | 2.824 | 0.046 | 0.311 | 3.484 | 0.641 | 12.66 | 1030 | 0.3208 | 0.589 | -0.436 | 0.292 | 2.875 | 0.977 |
| 800T125-54 | 0.0566 | 33 | 0.594 | 2.02 | 4.747 | 1.158 | 2.828 | 0.057 | 0.309 | 4.669 | 0.941 | 18.60 | 2039 | 0.6339 | 0.735 | -0.432 | 0.289 | 2.877 | 0.977 |
| 800T125-54 | 0.0566 | 50 | 0.594 | 2.02 | 4.747 | 1.158 | 2.828 | 0.057 | 0.309 | 4.427 | 0.825 | 24.69 | 2039 | 0.6339 | 0.735 | -0.432 | 0.289 | 2.877 | 0.977 |
| 800T125-68 | 0.0713 | 33 | 0.748 | 2.54 | 6.000 | 1.455 | 2.833 | 0.070 | 0.307 | 5.999 | 1.358 | 26.84 | 4086 | 1.2668 | 0.920 | -0.427 | 0.286 | 2.881 | 0.978 |
| 800T125-68 | 0.0713 | 50 | 0.748 | 2.54 | 6.000 | 1.455 | 2.833 | 0.070 | 0.307 | 5.958 | 1.217 | 36.44 | 4086 | 1.2668 | 0.920 | -0.427 | 0.286 | 2.881 | 0.978 |
| 800T125-97 | 0.1017 | 33 | 1.066 | 3.63 | 8.617 | 2.062 | 2.844 | 0.097 | 0.301 | 8.615 | 2.062 | 46.58 | 8846 | 3.6738 | 1.296 | -0.417 | 0.279 | 2.890 | 0.979 |
| 800T125-97 | 0.1017 | 50 | 1.066 | 3.63 | 8.617 | 2.062 | 2.844 | 0.097 | 0.301 | 8.615 | 2.062 | 64.03 | 10888 | 3.6738 | 1.296 | -0.417 | 0.279 | 2.890 | 0.979 |
| 800T150-33[1] | 0.0346 | 33 | 0.380 | 1.29 | 3.181 | 0.781 | 2.892 | 0.060 | 0.397 | 2.569 | 0.414 | 6.83 | 465 | 0.1518 | 0.751 | -0.588 | 0.388 | 2.977 | 0.961 |
| 800T150-43 | 0.0451 | 33 | 0.496 | 1.69 | 4.145 | 1.016 | 2.892 | 0.077 | 0.395 | 3.690 | 0.656 | 12.96 | 1030 | 0.3361 | 0.972 | -0.584 | 0.386 | 2.977 | 0.961 |
| 800T150-54 | 0.0566 | 33 | 0.622 | 2.12 | 5.216 | 1.272 | 2.896 | 0.096 | 0.393 | 4.978 | 0.970 | 19.17 | 2039 | 0.6641 | 1.215 | -0.580 | 0.383 | 2.980 | 0.962 |
| 800T150-54 | 0.0566 | 50 | 0.622 | 2.12 | 5.216 | 1.272 | 2.896 | 0.096 | 0.393 | 4.694 | 0.845 | 25.29 | 2039 | 0.6641 | 1.215 | -0.580 | 0.383 | 2.980 | 0.962 |
| 800T150-68 | 0.0713 | 33 | 0.783 | 2.66 | 6.596 | 1.599 | 2.902 | 0.119 | 0.390 | 6.531 | 1.414 | 27.94 | 4086 | 1.3272 | 1.526 | -0.575 | 0.379 | 2.984 | 0.963 |
| 800T150-68 | 0.0713 | 50 | 0.783 | 2.66 | 6.596 | 1.599 | 2.902 | 0.119 | 0.390 | 6.364 | 1.257 | 37.63 | 4086 | 1.3272 | 1.526 | -0.575 | 0.379 | 2.984 | 0.963 |
| 800T150-97 | 0.1017 | 33 | 1.116 | 3.80 | 9.483 | 2.270 | 2.914 | 0.165 | 0.385 | 9.481 | 2.269 | 47.62 | 8846 | 3.8491 | 2.162 | -0.564 | 0.372 | 2.993 | 0.965 |
| 800T150-97 | 0.1017 | 50 | 1.116 | 3.80 | 9.483 | 2.270 | 2.914 | 0.165 | 0.385 | 9.481 | 2.195 | 65.71 | 10888 | 3.8491 | 2.162 | -0.564 | 0.372 | 2.993 | 0.965 |
| 800T200-33[1] | 0.0346 | 33 | 0.415 | 1.41 | 3.750 | 0.921 | 3.006 | 0.135 | 0.571 | 2.788 | 0.424 | 6.99 | 465 | 0.1656 | 1.638 | -0.917 | 0.589 | 3.194 | 0.918 |
| 800T200-43 | 0.0451 | 33 | 0.541 | 1.84 | 4.888 | 1.198 | 3.006 | 0.175 | 0.569 | 4.044 | 0.676 | 13.37 | 1030 | 0.3667 | 2.124 | -0.913 | 0.587 | 3.193 | 0.918 |
| 800T200-54 | 0.0566 | 33 | 0.679 | 2.31 | 6.154 | 1.501 | 3.012 | 0.218 | 0.567 | 5.508 | 1.010 | 19.96 | 2039 | 0.7245 | 2.664 | -0.908 | 0.584 | 3.196 | 0.919 |
| 800T200-54 | 0.0566 | 50 | 0.679 | 2.31 | 6.154 | 1.501 | 3.012 | 0.218 | 0.567 | 5.152 | 0.873 | 26.12 | 2039 | 0.7245 | 2.664 | -0.908 | 0.584 | 3.196 | 0.919 |
| 800T200-68 | 0.0713 | 33 | 0.854 | 2.91 | 7.789 | 1.888 | 3.019 | 0.272 | 0.564 | 7.311 | 1.492 | 29.49 | 4086 | 1.4480 | 3.357 | -0.902 | 0.580 | 3.201 | 0.921 |
| 800T200-68 | 0.0713 | 50 | 0.854 | 2.91 | 7.789 | 1.888 | 3.019 | 0.272 | 0.564 | 7.056 | 1.312 | 39.28 | 4086 | 1.4480 | 3.357 | -0.902 | 0.580 | 3.201 | 0.921 |
| 800T200-97 | 0.1017 | 33 | 1.218 | 4.14 | 11.215 | 2.684 | 3.034 | 0.379 | 0.558 | 11.187 | 2.495 | 49.30 | 8846 | 4.1998 | 4.792 | -0.889 | 0.571 | 3.211 | 0.923 |
| 800T200-97 | 0.1017 | 50 | 1.218 | 4.14 | 11.215 | 2.684 | 3.034 | 0.379 | 0.558 | 10.844 | 2.352 | 70.41 | 10888 | 4.1998 | 4.792 | -0.889 | 0.571 | 3.211 | 0.923 |
| 1000T125-43[1] | 0.0451 | 33 | 0.563 | 1.92 | 6.633 | 1.306 | 3.431 | 0.047 | 0.290 | 5.886 | 0.820 | 13.53 | 822 | 0.3819 | 0.973 | -0.379 | 0.259 | 3.465 | 0.988 |
| 1000T125-54 | 0.0566 | 33 | 0.707 | 2.40 | 8.337 | 1.635 | 3.434 | 0.059 | 0.288 | 7.961 | 1.217 | 24.05 | 1627 | 0.7548 | 1.212 | -0.376 | 0.256 | 3.467 | 0.988 |
| 1000T125-54 | 0.0566 | 50 | 0.707 | 2.40 | 8.337 | 1.635 | 3.434 | 0.059 | 0.288 | 7.480 | 1.056 | 31.62 | 1627 | 0.7548 | 1.212 | -0.376 | 0.256 | 3.467 | 0.988 |
| 1000T125-68 | 0.0713 | 33 | 0.890 | 3.03 | 10.526 | 2.054 | 3.439 | 0.073 | 0.286 | 10.451 | 1.782 | 35.22 | 3260 | 1.5084 | 1.515 | -0.372 | 0.253 | 3.471 | 0.989 |
| 1000T125-68 | 0.0713 | 50 | 0.890 | 3.03 | 10.526 | 2.054 | 3.439 | 0.073 | 0.286 | 10.157 | 1.576 | 47.19 | 3260 | 1.5084 | 1.515 | -0.372 | 0.253 | 3.471 | 0.989 |
| 1000T125-97 | 0.1017 | 33 | 1.269 | 4.32 | 15.083 | 2.913 | 3.448 | 0.100 | 0.281 | 15.079 | 2.907 | 57.45 | 8846 | 4.3751 | 2.123 | -0.363 | 0.247 | 3.478 | 0.989 |
| 1000T125-97 | 0.1017 | 50 | 1.269 | 4.32 | 15.083 | 2.913 | 3.448 | 0.100 | 0.281 | 15.079 | 2.754 | 82.45 | 9505 | 4.3751 | 2.123 | -0.363 | 0.247 | 3.478 | 0.989 |
| 1000T150-43[1] | 0.0451 | 33 | 0.586 | 1.99 | 7.210 | 1.419 | 3.508 | 0.080 | 0.370 | 6.196 | 0.837 | 13.82 | 822 | 0.3972 | 1.612 | -0.513 | 0.345 | 3.565 | 0.979 |
| 1000T150-54 | 0.0566 | 33 | 0.735 | 2.50 | 9.065 | 1.778 | 3.512 | 0.100 | 0.368 | 8.433 | 1.250 | 24.71 | 1627 | 0.7850 | 2.013 | -0.509 | 0.342 | 3.567 | 0.980 |
| 1000T150-54 | 0.0566 | 50 | 0.735 | 2.50 | 9.065 | 1.778 | 3.512 | 0.100 | 0.368 | 7.881 | 1.080 | 32.32 | 1627 | 0.7850 | 2.013 | -0.509 | 0.342 | 3.567 | 0.980 |
| 1000T150-68 | 0.0713 | 33 | 0.926 | 3.15 | 11.450 | 2.234 | 3.517 | 0.124 | 0.366 | 11.345 | 1.848 | 36.52 | 3260 | 1.5688 | 2.522 | -0.505 | 0.339 | 3.572 | 0.980 |
| 1000T150-68 | 0.0713 | 50 | 0.926 | 3.15 | 11.450 | 2.234 | 3.517 | 0.124 | 0.366 | 10.778 | 1.623 | 48.58 | 3260 | 1.5688 | 2.522 | -0.505 | 0.339 | 3.572 | 0.980 |
| 1000T150-97 | 0.1017 | 33 | 1.320 | 4.49 | 16.420 | 3.171 | 3.527 | 0.172 | 0.361 | 16.416 | 3.166 | 62.55 | 8846 | 4.5504 | 3.557 | -0.495 | 0.332 | 3.580 | 0.981 |
| 1000T150-97 | 0.1017 | 50 | 1.320 | 4.49 | 16.420 | 3.171 | 3.527 | 0.172 | 0.361 | 16.416 | 2.906 | 87.00 | 9505 | 4.5504 | 3.557 | -0.495 | 0.332 | 3.580 | 0.981 |
| 1000T200-43[1] | 0.0451 | 33 | 0.631 | 2.15 | 8.364 | 1.646 | 3.641 | 0.183 | 0.539 | 6.723 | 0.861 | 14.21 | 822 | 0.4278 | 3.540 | -0.813 | 0.534 | 3.769 | 0.953 |
| 1000T200-54 | 0.0566 | 33 | 0.792 | 2.69 | 10.520 | 2.063 | 3.645 | 0.228 | 0.537 | 9.233 | 1.297 | 25.62 | 1627 | 0.8454 | 4.434 | -0.809 | 0.531 | 3.772 | 0.954 |
| 1000T200-54 | 0.0566 | 50 | 0.792 | 2.69 | 10.520 | 2.063 | 3.645 | 0.228 | 0.537 | 8.563 | 1.112 | 33.29 | 1627 | 0.8454 | 4.434 | -0.809 | 0.531 | 3.772 | 0.954 |
| 1000T200-68 | 0.0713 | 33 | 0.997 | 3.39 | 13.296 | 2.595 | 3.652 | 0.284 | 0.534 | 12.556 | 1.939 | 38.31 | 3260 | 1.6896 | 5.576 | -0.803 | 0.527 | 3.777 | 0.955 |
| 1000T200-68 | 0.0713 | 50 | 0.997 | 3.39 | 13.296 | 2.595 | 3.652 | 0.284 | 0.534 | 11.824 | 1.686 | 50.48 | 3260 | 1.6896 | 5.576 | -0.803 | 0.527 | 3.777 | 0.955 |
| 1000T200-97 | 0.1017 | 33 | 1.422 | 4.84 | 19.093 | 3.687 | 3.665 | 0.397 | 0.528 | 19.043 | 3.432 | 67.81 | 8846 | 4.9010 | 7.924 | -0.791 | 0.519 | 3.786 | 0.956 |
| 1000T200-97 | 0.1017 | 50 | 1.422 | 4.84 | 19.093 | 3.687 | 3.665 | 0.397 | 0.528 | 18.595 | 3.086 | 92.39 | 9505 | 4.9010 | 7.924 | -0.791 | 0.519 | 3.786 | 0.956 |

**1** Web-height to thickness ratio exceeds 200. Web Stiffeners are required at all support points and concentrated loads.

**2** When web height-to thickness ratio exceeds 260, or flange width-to-thickness rato exceeds 60, effective properties are not calculated (limitations in AISI Section B4.1).

See Section Properties Table Notes

# (T) Track Section Properties

| Member | Design Thickness (in) | Fy (ksi) | Gross Properties | | | | | | | Effective Properties | | | | Torsional Properties | | | | | |
|---|---|---|---|---|---|---|---|---|---|---|---|---|---|---|---|---|---|---|---|
| | | | Area ($in^2$) | Weight (lb/ft) | $I_x$ ($in^4$) | $S_x$ ($in^3$) | $R_x$ (in) | $I_y$ ($in^4$) | $R_y$ (in) | $I_x$ ($in^4$) | $S_x$ ($in^3$) | $M_a$ (in-k) | $Va_a$ (lb) | Jx1000 (in4) | $C_w$ ($in^6$) | $X_o$ (in) | m (in) | $R_o$ (in) | β |
| 1200T125-54[1] | 0.0566 | 33 | 0.820 | 2.79 | 13.341 | 2.187 | 4.034 | 0.060 | 0.271 | 12.295 | 1.493 | 24.63 | 1354 | 0.8756 | 1.820 | -0.333 | 0.230 | 4.056 | 0.993 |
| 1200T125-54[1] | 0.0566 | 50 | 0.820 | 2.79 | 13.341 | 2.187 | 4.034 | 0.060 | 0.271 | 11.460 | 1.287 | 32.18 | 1354 | 0.8756 | 1.820 | -0.333 | 0.230 | 4.056 | 0.993 |
| 1200T125-68 | 0.0713 | 33 | 1.033 | 3.51 | 16.834 | 2.749 | 4.037 | 0.074 | 0.268 | 16.243 | 2.208 | 43.64 | 2712 | 1.7501 | 2.270 | -0.329 | 0.227 | 4.060 | 0.993 |
| 1200T125-68 | 0.0713 | 50 | 1.033 | 3.51 | 16.834 | 2.749 | 4.037 | 0.074 | 0.268 | 15.688 | 1.935 | 57.95 | 2712 | 1.7501 | 2.270 | -0.329 | 0.227 | 4.060 | 0.993 |
| 1200T125-97 | 0.1017 | 33 | 1.472 | 5.01 | 24.090 | 3.899 | 4.045 | 0.102 | 0.264 | 24.081 | 3.691 | 72.93 | 7901 | 5.0763 | 3.171 | -0.322 | 0.222 | 4.066 | 0.994 |
| 1200T125-97 | 0.1017 | 50 | 1.472 | 5.01 | 24.090 | 3.899 | 4.045 | 0.102 | 0.264 | 23.751 | 3.443 | 103.09 | 7901 | 5.0763 | 3.171 | -0.322 | 0.222 | 4.066 | 0.994 |
| 1200T150-541 | 0.0566 | 33 | 0.848 | 2.89 | 14.384 | 2.358 | 4.118 | 0.103 | 0.348 | 12.962 | 1.531 | 25.26 | 1354 | 0.9059 | 3.033 | -0.454 | 0.310 | 4.157 | 0.988 |
| 1200T150-541 | 0.0566 | 50 | 0.848 | 2.89 | 14.384 | 2.358 | 4.118 | 0.103 | 0.348 | 12.021 | 1.314 | 32.85 | 1354 | 0.9059 | 3.033 | -0.454 | 0.310 | 4.157 | 0.988 |
| 1200T150-68 | 0.0713 | 33 | 1.068 | 3.63 | 18.156 | 2.964 | 4.122 | 0.127 | 0.345 | 17.571 | 2.283 | 45.12 | 2712 | 1.8105 | 3.795 | -0.450 | 0.307 | 4.161 | 0.988 |
| 1200T150-68 | 0.0713 | 50 | 1.068 | 3.63 | 18.156 | 2.964 | 4.122 | 0.127 | 0.345 | 16.568 | 1.988 | 59.53 | 2712 | 1.8105 | 3.795 | -0.450 | 0.307 | 4.161 | 0.988 |
| 1200T150-97 | 0.1017 | 33 | 1.523 | 5.18 | 25.999 | 4.208 | 4.131 | 0.176 | 0.340 | 25.990 | 3.997 | 78.99 | 7901 | 5.2516 | 5.335 | -0.441 | 0.301 | 4.169 | 0.989 |
| 1200T150-97 | 0.1017 | 50 | 1.523 | 5.18 | 25.999 | 4.208 | 4.131 | 0.176 | 0.340 | 25.717 | 3.620 | 108.38 | 7901 | 5.2516 | 5.335 | -0.441 | 0.301 | 4.169 | 0.989 |
| 1200T200-54[1] | 0.0566 | 33 | 0.905 | 3.08 | 16.470 | 2.700 | 4.266 | 0.236 | 0.510 | 14.079 | 1.583 | 26.12 | 1354 | 0.9663 | 6.714 | -0.730 | 0.487 | 4.358 | 0.972 |
| 1200T200-54[1] | 0.0566 | 50 | 0.905 | 3.08 | 16.470 | 2.700 | 4.266 | 0.236 | 0.510 | 12.961 | 1.351 | 33.77 | 1354 | 0.9663 | 6.714 | -0.730 | 0.487 | 4.358 | 0.972 |
| 1200T200-68 | 0.0713 | 33 | 1.140 | 3.88 | 20.799 | 3.396 | 4.272 | 0.294 | 0.508 | 19.283 | 2.386 | 47.14 | 2712 | 1.9313 | 8.431 | -0.725 | 0.483 | 4.363 | 0.972 |
| 1200T200-68 | 0.0713 | 50 | 1.140 | 3.88 | 20.799 | 3.396 | 4.272 | 0.294 | 0.508 | 18.029 | 2.060 | 61.68 | 2712 | 1.9313 | 8.431 | -0.725 | 0.483 | 4.363 | 0.972 |
| 1200T200-97 | 0.1017 | 33 | 1.625 | 5.53 | 29.816 | 4.826 | 4.284 | 0.410 | 0.502 | 29.808 | 4.303 | 85.02 | 7901 | 5.6022 | 11.945 | -0.714 | 0.476 | 4.372 | 0.973 |
| 1200T200-97 | 0.1017 | 50 | 1.625 | 5.53 | 29.816 | 4.826 | 4.284 | 0.410 | 0.502 | 28.971 | 3.824 | 114.50 | 7901 | 5.6022 | 11.945 | -0.714 | 0.476 | 4.372 | 0.973 |
| 1200T200-118 | 0.1242 | 33 | 1.984 | 6.75 | 36.544 | 5.878 | 4.292 | 0.492 | 0.498 | 36.535 | 5.800 | 114.62 | 13193 | 10.2007 | 14.513 | -0.706 | 0.471 | 4.378 | 0.974 |
| 1200T200-118 | 0.1242 | 50 | 1.984 | 6.75 | 36.544 | 5.878 | 4.292 | 0.492 | 0.498 | 36.535 | 5.285 | 158.23 | 14431 | 10.2007 | 14.513 | -0.706 | 0.471 | 4.378 | 0.974 |
| 1400T125-54[1] | 0.0566 | 33 | 0.933 | 3.17 | 19.987 | 2.815 | 4.628 | 0.061 | 0.256 | 17.722 | 1.768 | 29.17 | 1160 | 0.9965 | 2.559 | -0.299 | 0.209 | 4.645 | 0.996 |
| 1400T125-54[1] | 0.0566 | 50 | 0.933 | 3.17 | 19.987 | 2.815 | 4.628 | 0.061 | 0.256 | 16.406 | 1.518 | 37.95 | 1160 | 0.9965 | 2.559 | -0.299 | 0.209 | 4.645 | 0.996 |
| 1400T125-68 | 0.0713 | 33 | 1.175 | 4.00 | 25.208 | 3.538 | 4.631 | 0.076 | 0.254 | 23.549 | 2.634 | 52.04 | 2322 | 1.9917 | 3.189 | -0.296 | 0.206 | 4.648 | 0.996 |
| 1400T125-68 | 0.0713 | 50 | 1.175 | 4.00 | 25.208 | 3.538 | 4.631 | 0.076 | 0.254 | 22.618 | 2.294 | 68.69 | 2322 | 1.9917 | 3.189 | -0.296 | 0.206 | 4.648 | 0.996 |
| 1400T125-97 | 0.1017 | 33 | 1.676 | 5.70 | 36.043 | 5.021 | 4.638 | 0.104 | 0.249 | 35.773 | 4.481 | 88.55 | 6759 | 5.7776 | 4.444 | -0.289 | 0.201 | 4.653 | 0.996 |
| 1400T125-97 | 0.1017 | 50 | 1.676 | 5.70 | 36.043 | 5.021 | 4.638 | 0.104 | 0.249 | 34.586 | 4.135 | 123.81 | 6759 | 5.7776 | 4.444 | -0.289 | 0.201 | 4.653 | 0.996 |
| 1400T125-118 | 0.1242 | 33 | 2.046 | 6.96 | 44.090 | 6.109 | 4.642 | 0.124 | 0.246 | 44.073 | 5.855 | 115.70 | 12342 | 10.5201 | 5.334 | -0.284 | 0.197 | 4.657 | 0.996 |
| 1400T125-118 | 0.1242 | 50 | 2.046 | 6.96 | 44.090 | 6.109 | 4.642 | 0.124 | 0.246 | 43.751 | 5.455 | 163.32 | 12342 | 10.5201 | 5.334 | -0.284 | 0.197 | 4.657 | 0.996 |
| 1400T150-54[1] | 0.0566 | 33 | 0.962 | 3.27 | 21.402 | 3.015 | 4.718 | 0.105 | 0.330 | 18.619 | 1.811 | 29.88 | 1160 | 1.0267 | 4.280 | -0.410 | 0.283 | 4.747 | 0.993 |
| 1400T150-54[1] | 0.0566 | 50 | 0.962 | 3.27 | 21.402 | 3.015 | 4.718 | 0.105 | 0.330 | 17.150 | 1.548 | 38.71 | 1160 | 1.0267 | 4.280 | -0.410 | 0.283 | 4.747 | 0.993 |
| 1400T150-68 | 0.0713 | 33 | 1.211 | 4.12 | 27.000 | 3.790 | 4.722 | 0.130 | 0.328 | 25.412 | 2.719 | 53.72 | 2322 | 2.0521 | 5.349 | -0.407 | 0.280 | 4.751 | 0.993 |
| 1400T150-68 | 0.0713 | 50 | 1.211 | 4.12 | 27.000 | 3.790 | 4.722 | 0.130 | 0.328 | 23.803 | 2.354 | 70.47 | 2322 | 2.0521 | 5.349 | -0.407 | 0.280 | 4.751 | 0.993 |
| 1400T150-97 | 0.1017 | 33 | 1.727 | 5.87 | 38.626 | 5.381 | 4.730 | 0.180 | 0.323 | 38.338 | 4.835 | 95.54 | 6759 | 5.9529 | 7.503 | -0.399 | 0.275 | 4.757 | 0.993 |
| 1400T150-97 | 0.1017 | 50 | 1.727 | 5.87 | 38.626 | 5.381 | 4.730 | 0.180 | 0.323 | 37.280 | 4.336 | 129.82 | 6759 | 5.9529 | 7.503 | -0.399 | 0.275 | 4.757 | 0.993 |
| 1400T150-118 | 0.1242 | 33 | 2.108 | 7.17 | 47.269 | 6.549 | 4.735 | 0.215 | 0.319 | 47.252 | 6.292 | 124.34 | 12342 | 10.8394 | 9.048 | -0.393 | 0.270 | 4.762 | 0.993 |
| 1400T150-118 | 0.1242 | 50 | 2.108 | 7.17 | 47.269 | 6.549 | 4.735 | 0.215 | 0.319 | 46.910 | 5.888 | 176.28 | 12342 | 10.8394 | 9.048 | -0.393 | 0.270 | 4.762 | 0.993 |
| 1400T200-54[1] | 0.0566 | 33 | 1.018 | 3.46 | 24.232 | 3.413 | 4.879 | 0.242 | 0.487 | 20.099 | 1.870 | 30.85 | 1160 | 1.0872 | 9.520 | -0.665 | 0.449 | 4.948 | 0.982 |
| 1400T200-54[1] | 0.0566 | 50 | 1.018 | 3.46 | 24.232 | 3.413 | 4.879 | 0.242 | 0.487 | 18.385 | 1.590 | 39.75 | 1160 | 1.0872 | 9.520 | -0.665 | 0.449 | 4.948 | 0.982 |
| 1400T200-68 | 0.0713 | 33 | 1.282 | 4.36 | 30.583 | 4.293 | 4.884 | 0.301 | 0.485 | 27.708 | 2.833 | 55.97 | 2322 | 2.1729 | 11.942 | -0.661 | 0.446 | 4.952 | 0.982 |
| 1400T200-68 | 0.0713 | 50 | 1.282 | 4.36 | 30.583 | 4.293 | 4.884 | 0.301 | 0.485 | 25.741 | 2.434 | 72.87 | 2322 | 2.1729 | 11.942 | -0.661 | 0.446 | 4.952 | 0.982 |
| 1400T200-97 | 0.1017 | 33 | 1.828 | 6.22 | 43.791 | 6.101 | 4.894 | 0.420 | 0.479 | 43.676 | 5.179 | 102.34 | 6759 | 6.3035 | 16.883 | -0.651 | 0.439 | 4.960 | 0.983 |
| 1400T200-97 | 0.1017 | 50 | 1.828 | 6.22 | 43.791 | 6.101 | 4.894 | 0.420 | 0.479 | 41.762 | 4.563 | 136.62 | 6759 | 6.3035 | 16.883 | -0.651 | 0.439 | 4.960 | 0.983 |
| 1400T200-118 | 0.1242 | 33 | 2.232 | 7.59 | 53.628 | 7.430 | 4.901 | 0.505 | 0.476 | 53.611 | 7.069 | 139.69 | 12342 | 11.4780 | 20.479 | -0.644 | 0.434 | 4.966 | 0.983 |
| 1400T200-118 | 0.1242 | 50 | 2.232 | 7.59 | 53.628 | 7.430 | 4.901 | 0.505 | 0.476 | 53.450 | 6.361 | 190.46 | 12342 | 11.4780 | 20.479 | -0.644 | 0.434 | 4.966 | 0.983 |
| 1600T125-54[1] | 0.0566 | 33 | 1.046 | 3.56 | 28.500 | 3.519 | 5.219 | 0.062 | 0.243 | 24.283 | 2.043 | 33.71 | 1014 | 1.1174 | 3.432 | -0.272 | 0.191 | 5.232 | 0.997 |
| 1600T125-54[1] | 0.0566 | 50 | 1.046 | 3.56 | 28.500 | 3.519 | 5.219 | 0.062 | 0.243 | 22.345 | 1.749 | 43.72 | 1014 | 1.1174 | 3.432 | -0.272 | 0.191 | 5.232 | 0.997 |
| 1600T125-68[1] | 0.0713 | 33 | 1.318 | 4.48 | 35.935 | 4.423 | 5.222 | 0.077 | 0.241 | 32.434 | 3.059 | 50.48 | 2029 | 2.2333 | 4.273 | -0.268 | 0.189 | 5.234 | 0.997 |
| 1600T125-68[1] | 0.0713 | 50 | 1.318 | 4.48 | 35.935 | 4.423 | 5.222 | 0.077 | 0.241 | 31.000 | 2.653 | 66.32 | 2029 | 2.2333 | 4.273 | -0.268 | 0.189 | 5.234 | 0.997 |
| 1600T125-97 | 0.1017 | 33 | 1.879 | 6.39 | 51.349 | 6.279 | 5.227 | 0.105 | 0.237 | 49.840 | 5.274 | 104.22 | 5906 | 6.4788 | 5.945 | -0.262 | 0.184 | 5.239 | 0.997 |
| 1600T125-97 | 0.1017 | 50 | 1.879 | 6.39 | 51.349 | 6.279 | 5.227 | 0.105 | 0.237 | 47.826 | 4.826 | 144.50 | 5906 | 6.4788 | 5.945 | -0.262 | 0.184 | 5.239 | 0.997 |
| 1600T125-118 | 0.1242 | 33 | 2.294 | 7.81 | 62.789 | 7.641 | 5.231 | 0.125 | 0.234 | 62.761 | 6.966 | 137.65 | 10781 | 11.7973 | 7.126 | -0.257 | 0.181 | 5.243 | 0.998 |
| 1600T125-118 | 0.1242 | 50 | 2.294 | 7.81 | 62.789 | 7.641 | 5.231 | 0.125 | 0.234 | 60.926 | 6.422 | 192.27 | 10781 | 11.7973 | 7.126 | -0.257 | 0.181 | 5.243 | 0.998 |

**1** Web-height to thickness ratio exceeds 200. Web Stiffeners are required at all support points and concentrated loads.

**2** When web height-to thickness ratio exceeds 260, or flange width-to-thickness rato exceeds 60, effective properties are not calculated (limitations in AISI Section B4.1).

See Section Properties Table Notes

# (T) Track Section Properties

| Member | Design Thickness (in) | Fy (ksi) | Gross Properties | | | | | | | Effective Properties | | | | Torsional Properties | | | | | |
|---|---|---|---|---|---|---|---|---|---|---|---|---|---|---|---|---|---|---|---|
| | | | Area ($in^2$) | Weight (lb/ft) | $I_x$ ($in^4$) | $S_x$ ($in^3$) | $R_x$ (in) | $I_y$ ($in^4$) | $R_y$ (in) | $I_x$ ($in^4$) | $S_x$ ($in^3$) | $M_a$ (in-k) | $Va_g$ (lb) | Jx1000 (in4) | $C_w$ ($in^6$) | $X_o$ (in) | m (in) | $R_o$ (in) | β |
| 1600T150-54[1] | 0.0566 | 33 | 1.075 | 3.66 | 30.343 | 3.747 | 5.314 | 0.106 | 0.314 | 25.443 | 2.091 | 34.50 | 1014 | 1.1476 | 5.757 | -0.374 | 0.260 | 5.336 | 0.995 |
| 1600T150-54[1] | 0.0566 | 50 | 1.075 | 3.66 | 30.343 | 3.747 | 5.314 | 0.106 | 0.314 | 23.298 | 1.783 | 44.56 | 1014 | 1.1476 | 5.757 | -0.374 | 0.260 | 5.336 | 0.995 |
| 1600T150-68[1] | 0.0713 | 33 | 1.354 | 4.60 | 38.268 | 4.710 | 5.317 | 0.132 | 0.312 | 34.941 | 3.154 | 52.03 | 2029 | 2.2938 | 7.188 | -0.371 | 0.258 | 5.339 | 0.995 |
| 1600T150-68[1] | 0.0713 | 50 | 1.354 | 4.60 | 38.268 | 4.710 | 5.317 | 0.132 | 0.312 | 32.535 | 2.719 | 67.97 | 2029 | 2.2938 | 7.188 | -0.371 | 0.258 | 5.339 | 0.995 |
| 1600T150-97 | 0.1017 | 33 | 1.930 | 6.57 | 54.708 | 6.690 | 5.324 | 0.183 | 0.308 | 53.168 | 5.676 | 112.15 | 5906 | 6.6541 | 10.066 | -0.363 | 0.253 | 5.345 | 0.995 |
| 1600T150-97 | 0.1017 | 50 | 1.930 | 6.57 | 54.708 | 6.690 | 5.324 | 0.183 | 0.308 | 51.376 | 5.051 | 151.22 | 5906 | 6.6541 | 10.066 | -0.363 | 0.253 | 5.345 | 0.995 |
| 1600T150-118 | 0.1242 | 33 | 2.356 | 8.02 | 66.919 | 8.144 | 5.329 | 0.218 | 0.304 | 66.892 | 7.461 | 147.44 | 10781 | 12.1166 | 12.124 | -0.358 | 0.249 | 5.350 | 0.996 |
| 1600T150-118 | 0.1242 | 50 | 2.356 | 8.02 | 66.919 | 8.144 | 5.329 | 0.218 | 0.304 | 65.020 | 6.913 | 206.98 | 10781 | 12.1166 | 12.124 | -0.358 | 0.249 | 5.350 | 0.996 |
| 1600T200-54[1] | 0.0566 | 33 | 1.131 | 3.85 | 34.030 | 4.202 | 5.485 | 0.246 | 0.467 | 27.332 | 2.156 | 35.57 | 1014 | 1.2081 | 12.864 | -0.612 | 0.417 | 5.538 | 0.988 |
| 1600T200-54[1] | 0.0566 | 50 | 1.131 | 3.85 | 34.030 | 4.202 | 5.485 | 0.246 | 0.467 | 24.860 | 1.828 | 45.71 | 1014 | 1.2081 | 12.864 | -0.612 | 0.417 | 5.538 | 0.988 |
| 1600T200-68[1] | 0.0713 | 33 | 1.425 | 4.85 | 42.933 | 5.284 | 5.489 | 0.307 | 0.464 | 37.905 | 3.280 | 54.11 | 2029 | 2.4146 | 16.123 | -0.607 | 0.414 | 5.542 | 0.988 |
| 1600T200-68[1] | 0.0713 | 50 | 1.425 | 4.85 | 42.933 | 5.284 | 5.489 | 0.307 | 0.464 | 35.012 | 2.808 | 70.19 | 2029 | 2.4146 | 16.123 | -0.607 | 0.414 | 5.542 | 0.988 |
| 1600T200-97 | 0.1017 | 33 | 2.032 | 6.91 | 61.425 | 7.511 | 5.498 | 0.428 | 0.459 | 60.192 | 6.058 | 119.71 | 5906 | 7.0047 | 22.755 | -0.598 | 0.408 | 5.550 | 0.988 |
| 1600T200-97 | 0.1017 | 50 | 2.032 | 6.91 | 61.425 | 7.511 | 5.498 | 0.428 | 0.459 | 57.306 | 5.303 | 158.77 | 5906 | 7.0047 | 22.755 | -0.598 | 0.408 | 5.550 | 0.988 |
| 1600T200-118 | 0.1242 | 33 | 2.481 | 8.44 | 75.179 | 9.149 | 5.505 | 0.515 | 0.455 | 75.152 | 8.338 | 164.77 | 10781 | 12.7552 | 27.568 | -0.592 | 0.403 | 5.556 | 0.989 |
| 1600T200-118 | 0.1242 | 50 | 2.481 | 8.44 | 75.179 | 9.149 | 5.505 | 0.515 | 0.455 | 73.606 | 7.441 | 222.78 | 10781 | 12.7552 | 27.568 | -0.592 | 0.403 | 5.556 | 0.989 |

**1** Web-height to thickness ratio exceeds 200. Web Stiffeners are required at all support points and concentrated loads.

**2** When web height-to thickness ratio exceeds 260, or flange width-to-thickness rato exceeds 60, effective properties are not calculated (limitations in AISI Section B4.1).

See Section Properties Table Notes



## Web Depth-to-Thickness Ratios for Stud and Joist Members[2, 3]

| Style | Web Depth (in) | 18Mil 0.0188 | 27Mil 0.0283 | 30Mil 0.0312 | 33Mil 0.0346 | 43Mil 0.0451 | 54Mil 0.0566 | 68Mil 0.0713 | 97Mil 0.1017 | 118Mil 0.1242 |
|---|---|---|---|---|---|---|---|---|---|---|
| 162S | 1.625 | 75 | 50 | 45 | 41 | 31 | 24 | 18 | 11 | 8 |
| 250S | 2.500 | 122 | 81 | 73 | 66 | 50 | 39 | 30 | 20 | 15 |
| 350S | 3.500 | 175 | 116 | 105 | 95 | 72 | 57 | 44 | 29 | 23 |
| 362S | 3.625 | 182 | 120 | 109 | 98 | 75 | 59 | 46 | 31 | 24 |
| 400S | 4.000 | 202 [1] | 134 | 121 | 109 | 84 | 66 | 51 | 34 | 27 |
| 550S | 5.500 | - | 187 | 169 | 153 | 117 | 92 | 72 | 49 | 39 |
| 600S | 6.000 | - | 204 [1] | 185 | 167 | 128 | 101 | 79 | 54 | 43 |
| 800S | 8.000 | - | - | 249 [1] | 225 [1] | 172 | 136 | 107 | 74 | 59 |
| 1000S | 10.000 | - | - | - | - | 217 [1] | 172 | 135 | 93 | 76 |
| 1200S | 12.000 | - | - | - | - | - | 207 [1] | 163 | 113 | 92 |
| 1400S | 14.000 | - | - | - | - | - | 242 [1] | 191 | 133 | 108 |
| 1600S | 16.000 | - | - | - | - | - | - | 219 [1] | 152 | 124 |

**1** h/t exceeds 200

**2** h value used for h/t calculations is the flat width of the web. For Stud members, this is the out-to-out member size, minus twice the thickness, minus twice the inside bend radius.

**3** h/t values exceeding 260 are marked with a dash ( - )

# Limiting Wall Heights - Composite

### Interior Non-Structural Composite Table Notes

1. Allowable composite limiting heights are tested/calculated using ICC-ES AC86.
2. Minimum safety factor for strength = 1.508 for 5 to 10 psf, and 2.327 for 15 psf.
3. The gypsum board must be applied vertically at full height to each stud flange and installed using minimum No. 6 Type S Drywall screws spaced a maximum of 12 in. on-center for studs at 24-in spacing, and 16 in. on-center for studs at 16 and 12 in. spacing.
4. No fasteners are required for attaching the stud to the track.
5. Stud end bearing must be a minimum of 1 inch.
6. Minimum material yield strength equals 33 ksi.
7. 'f' adjacent to the height value indicates that flexural stress controls the allowable wall height.

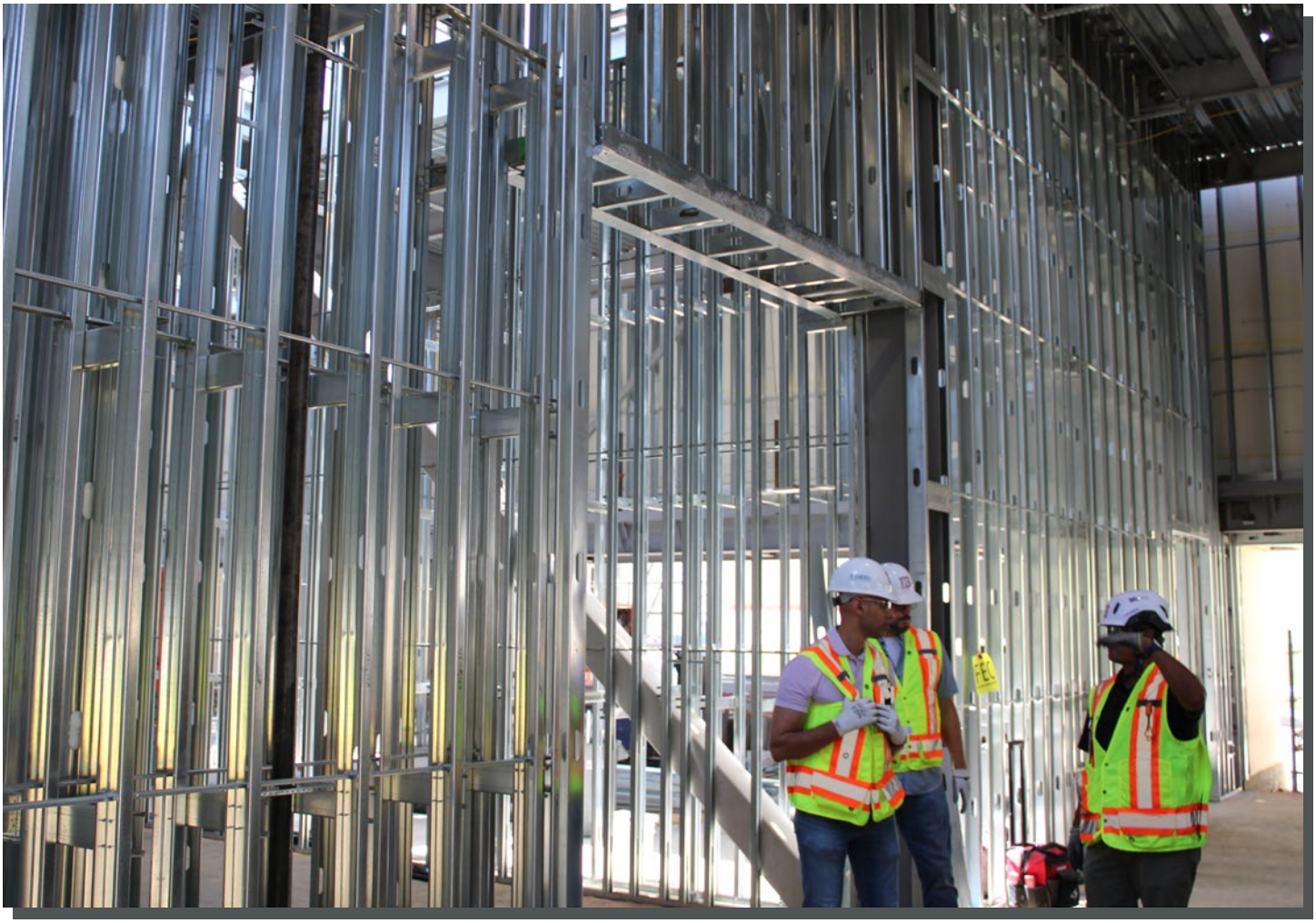

# Interior Non-Structural Composite

| Stud Member | Spacing, in, oc | Fy, ksi | 5 psf | | | 7.5 psf | | | 10 psf | | | 15 pf | | |
|---|---|---|---|---|---|---|---|---|---|---|---|---|---|---|
| | | | L/120 | L/240 | L/360 | L/120 | L/240 | L/360 | L/120 | L/240 | L/360 | L/120 | L/240 | L/360 |
| 162S125-18 | 12 | 33 | 13'-0" f | 11'-1" | 9'-10" | 10'-8" f | 9'-8" | 8'-7" | 9'-3" f | 8'-9" | 7'-9" | --- | --- | --- |
| | 16 | | 11'-3" f | 10'-1" | 8'-11" | 9'-3" f | 8'-9" | 7'-9" | 8'-0" f | 7'-11" | --- | --- | --- | --- |
| | 24 | | 9'-3" f | 8'-9" | 7'-9" | --- | --- | --- | --- | --- | --- | --- | --- | --- |
| 162S125-27 | 12 | 33 | 14'-9" | 11'-8" | 10'-2" | 12'-10" | 10'-2" | 8'-7" | 11'-8" | 9'-1" | 7'-6" | 8'-6" | --- | --- |
| | 16 | | 13'-4" | 10'-7" | 9'-1" | 11'-8" | 9'-1" | 7'-6" | 10'-7" | 7'-11" | --- | --- | --- | --- |
| | 24 | | 11'-8" | 9'-1" | --- | 10'-2" | --- | --- | 9'-1" | --- | --- | --- | --- | --- |
| 162S125-30 | 12 | 33 | 14'-11" | 11'-10" | 10'-4" | 13'-1" | 10'-4" | 8'-11" | 11'-10" | 9'-4" | 7'-11" | 9'-10" f | 7'-11" | --- |
| | 16 | | 13'-7" | 10'-9" | 9'-4" | 11'-10" | 9'-4" | 7'-11" | 10'-9" | 8'-3" | --- | 8'-6" | --- | --- |
| | 24 | | 11'-10" | 9'-4" | 7'-11" | 10'-4" | 7'-11" | --- | 9'-4" | --- | --- | --- | --- | --- |
| 250S125-18 | 12 | 33 | 16'-4" f | 14'-2" | 12'-9" | 13'-4" f | 12'-4" | 11'-2" | 11'-7" f | 11'-3" | 10'-2" | --- | --- | --- |
| | 16 | | 14'-2" f | 12'-10" | 11'-7" | 11'-7" f | 11'-3" | 10'-2" | 10'-0" f | 10'-0" f | 9'-0" | --- | --- | --- |
| | 24 | | 11'-7" f | 11'-3" | 10'-2" | 9'-5" f | 9'-5" f | 8'-6" | 8'-2" f | 8'-2" f | --- | --- | --- | --- |
| 250S125-27 | 12 | 33 | 18'-7" | 15'-4" | 13'-9" | 16'-3" | 13'-5" | 11'-12" | 14'-9" | 12'-2" | 10'-11" | 10'-6" f | 10'-6" f | 9'-4" |
| | 16 | | 16'-10" | 13'-11" | 12'-5" | 14'-9" | 12'-2" | 10'-11" | 13'-5" | 11'-1" | 9'-11" | 9'-1" f | 9'-1" f | 8'-1" |
| | 24 | | 14'-9" | 12'-2" | 10'-11" | 12'-11" | 10'-8" | 9'-4" | 11'-3" f | 9'-8" | 8'-1" | --- | --- | --- |
| 250S125-30 | 12 | 33 | 18'-5" | 15'-10" | 14'-1" | 16'-1" | 13'-10" | 12'-4" | 14'-7" | 12'-7" | 11'-2" | 11'-0" f | 11'-0" f | 9'-9" |
| | 16 | | 16'-9" | 14'-5" | 12'-10" | 14'-7" | 12'-7" | 11'-2" | 13'-3" | 11'-5" | 10'-2" | 9'-6" f | 9'-6" f | 8'-8" |
| | 24 | | 14'-7" | 12'-7" | 11'-2" | 12'-9" | 11'-0" | 9'-9" | 11'-7" | 10'-0" | 8'-8" | 7'-9" f | 7'-9" f | --- |
| 250S125-33 | 12 | 33 | 19'-8" | 15'-8" | 13'-8" | 17'-3" | 13'-8" | 11'-11" | 15'-8" | 12'-5" | 10'-10" | 11'-5" f | 10'-10" | 9'-5" |
| | 16 | | 17'-11" | 14'-3" | 12'-5" | 15'-8" | 12'-5" | 10'-10" | 14'-3" | 11'-3" | 9'-10" | 9'-11" f | 9'-10" | 8'-4" |
| | 24 | | 15'-8" | 12'-5" | 10'-10" | 13'-8" | 10'-10" | 9'-5" | 12'-4" f | 9'-10" | 8'-4" | 8'-1" f | 8'-1" f | --- |
| 350S125-18 | 12 | 33 | 18'-3" f | 16'-4" | 14'-4" | 14'-11" f | 14'-4" | 12'-6" | 12'-11" f | 12'-11" f | 11'-4 | 8'-5" f | 8'-5" f | 8'-5" f |
| | 16 | | 15'-10" f | 14'-10" | 13'-0" | 12'-11" f | 12'-11" f | 11'-4" | 11'-2" f | 11'-2" f | 10'-3" | --- | --- | --- |
| | 24 | | 12'-11" f | 12'-11" f | 11'-4" | 10'-7" f | 10'-7" f | 9'-11" | 9'-2" f | 9'-2" f | 9'-0" | --- | --- | --- |
| 350S125-27 | 12 | 33 | 22'-6" | 17'-11" | 15'-7" | 19'-8" | 15'-7" | 13'-8" | 17'-11" | 14'-2" | 12'-4" | 12'-0" f | 12'-0" f | 10'-8" |
| | 16 | | 20'-6" | 16'-3" | 14'-2" | 17'-11" | 14'-2" | 12'-4" | 15'-10" f | 12'-11" | 11'-2" | 10'-5" f | 10'-5" f | --- |
| | 24 | | 17'-11" | 14'-2" | 12'-4" | 14'-11" f | 12'-4" | 10'-8" | 12'-11" f | 11'-2" | --- | --- | --- | --- |
| 350S125-30 | 12 | 33 | 22'-6" | 17'-11" | 15'-8" | 19'-8" | 15'-8" | 13'-8" | 17'-11" | 14'-2" | 12'-4" | 12'-10" f | 12'-4" | 10'-7" |
| | 16 | | 20'-6" | 16'-3" | 14'-2" | 17'-11" | 14'-2" | 12'-4" | 16'-3" | 12'-11" | 11'-1" | 11'-1" f | 11'-1" f | --- |
| | 24 | | 17'-11" | 14'-2" | 12'-4" | 15'-8" | 12'-4" | 10'-7" | 13'-9" f | 11'-1" | --- | --- | --- | --- |
| 350S125-33 | 12 | 33 | 23'-0" | 18'-3" | 15'-11" | 20'-1" | 15'-11" | 13'-11" | 18'-3" | 14'-6" | 12'-8" | 13'-3" f | 12'-8" | 10'-10" |
| | 16 | | 20'-11" | 16'-7" | 14'-6" | 18'-3" | 14'-6" | 12'-8" | 16'-7" | 13'-2" | 11'-4" | 11'-6" f | 11'-4" | 9'-8" |
| | 24 | | 18'-3" | 14'-6" | 12'-8" | 15'-11" | 12'-8" | 10'-10" | 14'-4" f | 11'-4" | 9'-8" | --- | --- | --- |
| 362S125-18 | 12 | 33 | 18'-8" f | 16'-8" | 14'-7" | 15'-3" f | 14'-7" | 12'-9" | 13'-2" f | 13'-2" f | 11'-6" | 8'-8" f | 8'-8" f | 8'-8" f |
| | 16 | | 16'-2" f | 15'-2" | 13'-3" | 13'-2" f | 13'-2" f | 11'-6" | 11'-5" f | 11'-5" f | 10'-4" | --- | --- | --- |
| | 24 | | 13'-2" f | 13'-2" f | 11'-6" | 10'-9" f | 10'-9" f | 9'-11" | 9'-4" f | 9'-4" f | 8'-11" | --- | --- | --- |
| 362S125-27 | 12 | 33 | 22'-10" | 18'-2" | 15'-10" | 19'-11" | 15'-10" | 13'-10" | 18'-2" | 14'-5" | 12'-6" | 12'-0" f | 12'-0" f | 10'-7" |
| | 16 | | 20'-9" | 16'-6" | 14'-5" | 18'-2" | 14'-5" | 12'-6" | 15'-9" f | 13'-1" | 12'-2" | 10'-5" f | 10'-5" f | --- |
| | 24 | | 18'-2" | 14'-5" | 12'-6" | 14'-11" f | 12'-6" | 10'-7" | 12'-11" f | 11'-1" | --- | --- | --- | --- |
| 362S125-30 | 12 | 33 | 22'-10" | 18'-3" | 16'-4" | 19'-11" | 16'-0" | 14'-3" | 18'-1" | 14'-6" | 12'-11" | 12'-8" f | 12'-8" f | 10'-11" |
| | 16 | | 20'-8" | 16'-7" | 14'-10" | 18'-1" | 14'-6" | 12'-11" | 16'-5" | 13'-2" | 11'-6" | 11'-0" f | 11'-0" f | --- |
| | 24 | | 18'-1" | 14'-6" | 12'-11" | 15'-9" f | 12'-8" | 10'-11" | 13'-8" f | 11'-4" | --- | --- | --- | --- |
| 362S125-33 | 12 | 33 | 24'-2" | 19'-2" | 16'-9" | 21'-1" | 16'-9" | 14'-8" | 19'-2" | 15'-3" | 13'-4" | 13'-5" f | 13'-4" | 11'-4" |
| | 16 | | 21'-11" | 17'-5" | 15'-3" | 19'-2" | 15'-3" | 13'-4" | 17'-5" | 13'-10" | 11'-11" | 11'-8" f | 11'-8" f | 10'-1" |
| | 24 | | 19'-2" | 15'-3" | 13'-4" | 16'-8" f | 13'-4" | 11'-4" | 14'-5" f | 11'-11" | 10'-1" | --- | --- | --- |
| 400S125-18 | 12 | 33 | 19'-3" f | 17'-6" | 15'-4" | 15'-9" f | 15'-4" | 13'-4" | 13'-8" f | 13'-8" f | 12'-2" | 8'-11" f | 8'-11" f | 8'-11" f |
| | 16 | | 16'-8" f | 15'-11" | 13'-11" | 13'-8" f | 13'-8" f | 12'-2" | 11'-10" f | 11'-10" f | 11'-0" | 7'-9" f | 7'-9" f | 7'-9" f |
| | 24 | | 13'-8" f | 13'-8" f | 12'-2" | 11'-2" f | 11'-2" f | 10'-7" | 9'-8" f | 9'-8" f | 9'-7" | --- | --- | --- |
| 400S125-27 | 12 | 33 | 24'-6" | 19'-5" | 17'-0" | 21'-5" | 17'-0" | 14'-10" | 18'-8" f | 15'-5" | 13'-6" | 12'-3" f | 12'-3" f | 11'-8" |
| | 16 | | 22'-3" | 17'-8" | 15'-5" | 18'-8" f | 15'-5" | 13'-6" | 16'-2" f | 14'-0" | 12'-2" | 10'-8" f | 10'-8" f | 10'-6" |
| | 24 | | 18'-8" f | 15'-5" | 13'-6" | 15'-3" f | 13'-6" | 11'-8" | 13'-3" f | 12'-2" | 10'-6" | --- | --- | --- |
| 400S125-30 | 12 | 33 | 24'-6" | 19'-5" | 17'-0" | 21'-5" | 17'-0" | 14'-10" | 19'-5" | 15'-5" | 13'-6" | 13'-2" f | 13'-2" f | 11'-7" |
| | 16 | | 22'-3" | 17'-8" | 15'-5" | 19'-5" | 15'-5" | 13'-6" | 17'-5" f | 14'-0" | 12'-2" | 11'-5" f | 11'-5" f | 10'-4" |
| | 24 | | 19'-5" | 15'-5" | 13'-6" | 16'-5" f | 13'-6" | 11'-7" | 14'-2" f | 12'-2" | 10'-4" | --- | --- | --- |

See Interior Non-Structural Composite Table Notes

# Interior Non-Structural Composite

| Stud Member | Spacing, in, oc | Fy, ksi | 5 psf | | | 7.5 psf | | | 10 psf | | | 15 pf | | |
|---|---|---|---|---|---|---|---|---|---|---|---|---|---|---|
| | | | L/120 | L/240 | L/360 | L/120 | L/240 | L/360 | L/120 | L/240 | L/360 | L/120 | L/240 | L/360 |
| 400S125-33 | 12 | 33 | 25'-3" | 20'-1" | 17'-6" | 22'-1" | 17'-6" | 20'-1" | 20'-1" | 15'-11" | 13'-11" | 13'-11" f | 13'-11" | 12'-0" |
| | 16 | | 22'-11" | 18'-3" | 15'-11" | 20'-1" | 15'-11" | 18'-3" | 18'-3" | 14'-5" | 12'-7" | 12'-1" f | 12'-1" f | 10'-9" |
| | 24 | | 20'-1" | 15'-11" | 13'-11" | 17'-3" f | 13'-11" | 15'-0" f | 15'-0" f | 12'-7" | 10'-9" | 9'-10" f | 9'-10" f | --- |
| 550S125-18 | 12 | 33 | 21'-11 f | 21'-11 f | 21'-10" | 17'-10" f | 17'-10" f | 17'-0" | 15'-6" f | 15'-6" f | 15'-6" f | --- | --- | --- |
| | 16 | | 14'-6" f | 19'-0" f | 17'-9" | 15'-6" f | 15'-6" f | 15'-6" f | 13'-5" f | 13'-5" f | 13'-5" f | --- | --- | --- |
| | 24 | | 11'-10" f | 15'-6" f | 15'-6" f | 12'-8" f | 12'-8" f | 12'-8" f | --- | --- | --- | --- | --- | --- |
| 550S125-27 | 12 | 33 | 30'-4" | 24'-8" | 21'-10" | 26'-9" f | 21'-10" | 19'-4" | 23'-2" f | 20'-0" | 17'-8" | --- | --- | --- |
| | 16 | | 27'-11" | 22'-8" | 20'-0" | 23'-2" f | 20'-0" | 17'-8" | 20'-1" f | 18'-4" | 16'-0" | --- | --- | --- |
| | 24 | | 23'-2" f | 20'-0" | 17'-8" | 18'-11" f | 17'-8" | 15'-5" | 16'-5" f | 16'-0" | --- | --- | --- | --- |
| 550S125-30 | 12 | 33 | 30'-5" | 24'-10" | 22'-0" | 27'-0" | 22'-0" | 19'-5" | 24'-10" | 20'-2" | 17'-10" | 16'-4" f | 16'-4" f | 15'-7" |
| | 16 | | 28'-0" | 22'-9" | 20'-2" | 24'-10" f | 20'-2" | 17'-10" | 21'-7" f | 18'-6" | 16'-2" | --- | --- | --- |
| | 24 | | 24'-10" | 20'-2" | 17'-10" | 20'-4" f | 17'-10" | 15'-7" | 17'-7" f | 16'-2" | --- | --- | --- | --- |
| 600S125-18 | 12 | 33 | 23'-2' f | 22'-9" | 19'-11" | 18'-11" f | 18'-11" f | 17'-5" | 16'-4" f | 16'-4" f | 15'-10" | --- | --- | --- |
| | 16 | | 20'-1" f | 20'-1" f | 18'-1" | 16'-4" f | 16'-4" f | 15'-10" | 14'-2" f | 14'-2" f | 14'-2" | --- | --- | --- |
| | 24 | | 16'-4" f | 16'-4" f | 15'-10" | 13'-4" f | 13'-4" f | 13'-4" f | --- | --- | --- | --- | --- | --- |
| 600S125-27 | 12 | 33 | 32'-5" f | 26'-9" | 23'-5" | 26'-5" f | 23'-5" | 20'-5" | 22'-11" f | 21'-3" | 16'-10" | --- | --- | --- |
| | 16 | | 28'-1" f | 24'-4" | 21'-3" | 22'-11" f | 21'-3" | 18'-7" | 19'-10" f | 19'-4" | 14'-7" | --- | --- | --- |
| | 24 | | 22'-11" f | 21'-3" | 18'-7" | 18'-8" f | 18'-7" | 16'-1" | 16'-2" f | 16'-2" f | --- | --- | --- | --- |
| 600S125-30 | 12 | 33 | 34'-2" | 27'-1" | 23'-8" | 28'-11" f | 23'-8" | 20'-8" | 25'-0" f | 21'-6" | 18'-9" | 16'-5" f | 16'-5" f | 16'-5" f |
| | 16 | | 30'-8" f | 24'-7" | 21'-6" | 25''-0" f | 21'-6" | 18'-9" | 21'-8" f | 19'-6" | 17'-1" | --- | --- | --- |
| | 24 | | 25'-0" f | 21'-6" | 18'-9" | 20'-5" f | 18'-9" | 16'-5" | 17'-8" f | 17'-1" | --- | --- | --- | --- |
| 600S125-33 | 12 | 33 | 35'-4" | 28'-1" | 24'-6" | 30'-10" | 24'-6" | 21'-5" | 27'-10" f | 22'-3" | 19'-5" | 18'-4" f | 18'-4" f | 16'-11" |
| | 16 | | 32'-1" f | 25'-6" | 22'-3" | 27'-10" f | 22'-3" | 19'-5" | 24'-1" f | 20'-3" | 17'-8" | 15'-10" f | 15'-10" f | --- |
| | 24 | | 27'-10" f | 22'-3" | 19'-5" | 22'-9" f | 19'-5" | 16'-11" | 19'-8" f | 17'-8" | --- | --- | --- | --- |

See Interior Non-Structural Composite Table Notes

# Limiting Wall Heights - Non-Composite

### Interior Non-Structural Non-Composite Table Notes

1. 5 psf, 7.5 psf, and 10 psf loads have NOT been reduced for strength or deflection checks. Full lateral load is applied.
2. Calculated properties are based on AISI S100-16/S2-20, North American Specification for Cold-Formed Steel Structural Members.
3. Limiting heights are based on continuous support of each flange over the full length of the stud.
4. Limiting heights are based on steel properties only (non-composite).
5. Web crippling checks are based on end-one flange loading condition using 1-inch end bearing.



# Interior Non-Structural Non-Composite

| Stud Member | Spacing, in, oc | Fy, ksi | 5 psf | | | 7.5 psf | | | 10 psf | | |
|---|---|---|---|---|---|---|---|---|---|---|---|
| | | | L/120 | L/240 | L/360 | L/120 | L/240 | L/360 | L/120 | L/240 | L/360 |
| 162S125-18 | 12 | 33 | 9'-1" | 7'-8" | 6'-8" | 7'-5" | 6'-8" | 5'-10" | 6'-5" | 6'-1" | 5'-4" |
| | 16 | | 7'-10" | 6'-11" | 6'-1" | 6'-5" | 6'-1" | 5'-4" | 5'-7" | 5'-6" | 4'-10" |
| | 24 | | 6'-5" | 6'-1" | 5'-4" | 5'-3" | 5'-3" | 4'-8" | 4'-6" | 4'-6" | 4'-3" |
| 162S125-27 | 12 | 33 | 11'-3" | 8'-11" | 7'-10" | 9'-8" | 7'-10" | 6'-10" | 8'-4" | 7'-1" | 6'-3" |
| | 16 | | 10'-3" | 8'-2" | 7'-1" | 8'-4" | 7'-1" | 6'-3" | 7'-3" | 6'-6" | 5'-8" |
| | 24 | | 8'-4" | 7'-1" | 6'-3" | 6'-10" | 6'-3" | 5'-5" | 5'-11" | 5'-8" | 4'-11" |
| 162S125-30 | 12 | 33 | 11'-8" | 9'-3" | 8'-1" | 10'-2" | 8'-1" | 7'-1" | 8'-11" | 7'-4" | 6'-5" |
| | 16 | | 10'-7" | 8'-5" | 7'-4" | 8'-11" | 7'-4" | 6'-5" | 7'-9" | 6'-8" | 5'-10" |
| | 24 | | 8'-11" | 7'-4" | 6'-5" | 7'-4" | 6'-5" | 5'-7" | 6'-4" | 5'-10" | 5'-1" |
| 162S125-33 | 12 | 33 | 12'-0" | 9'-6" | 8'-4" | 10'-6" | 8'-4" | 7'-3" | 9'-6" | 7'-7" | 6'-7" |
| | 16 | | 10'-11" | 8'-8" | 7'-7" | 9'-6" | 7'-7" | 6'-7" | 8'-4" | 6'-11" | 6'-0" |
| | 24 | | 9'-6" | 7'-7" | 6'-7" | 7'-10" | 6'-7" | 5'-9" | 6'-9" | 6'-0" | 5'-3" |
| 250S125-18 | 12 | 33 | 12'-4" | 10'-7" | 9'-3" | 10'-1" | 9'-3" | 8'-1" | 8'-9" | 8'-5" | 7'-4" |
| | 16 | | 10'-8" | 9'-7" | 8'-5" | 8'-9" | 8'-5" | 7'-4" | 7'-7" | 7'-7" | 6'-8" |
| | 24 | | 8'-9" | 8'-5" | 7'-4" | 7'-1" | 7'-1" | 6'-5" | 6'-2" | 6'-2" | 5'-10" |
| 250S125-27 | 12 | 33 | 15'-7" | 12'-5" | 10'-10" | 12'-11" | 10'-10" | 9'-5" | 11'-3" | 9'-10" | 8'-7" |
| | 16 | | 13'-9" | 11'-3" | 9'-10" | 11'-3" | 9'-10" | 8'-7" | 9'-9" | 8'-11" | 7'-10" |
| | 24 | | 11'-3" | 9'-10" | 8'-7" | 9'-2" | 8'-7" | 7'-6" | 7'-11" | 7'-10" | 6'-10" |
| 250S125-30 | 12 | 33 | 16'-1" | 12'-9" | 11'-2" | 13'-9" | 11'-2" | 9'-9" | 11'-11" | 10'-2" | 8'-10" |
| | 16 | | 14'-7" | 11'-7" | 10'-2" | 11'-11" | 10'-2" | 8'-10" | 10'-4" | 9'-2" | 8'-1" |
| | 24 | | 11'-11" | 10'-2" | 8'-10" | 9'-9" | 8'-10" | 7'-9" | 8'-5" | 8'-1" | 7'-0" |
| 250S125-33 | 12 | 33 | 16'-8" | 13'-2" | 11'-6" | 14'-6" | 11'-6" | 10'-1" | 12'-9" | 10'-6" | 9'-2" |
| | 16 | | 15'-1" | 12'-0" | 10'-6" | 12'-9" | 10'-6" | 9'-2" | 11'-1" | 9'-6" | 8'-4" |
| | 24 | | 12'-9" | 10'-6" | 9'-2" | 10'-5" | 9'-2" | 8'-0" | 9'-0" | 8'-4" | 7'-3" |
| 250S125-43 | 12 | 33 | 18'-1" | 14'-4" | 12'-7" | 15'-10" | 12'-7" | 10'-11" | 14'-4" | 11'-5" | 9'-11" |
| | 16 | | 16'-5" | 13'-1" | 11'-5" | 14'-4" | 11'-5" | 9'-11" | 13'-1" | 10'-4" | 9'-1" |
| | 24 | | 14'-4" | 11'-5" | 9'-11" | 12'-5" | 9'-11" | 8'-8" | 10'-9" | 9'-1" | 7'-11" |
| 250S125-54 | 12 | 33 | 19'-4" | 15'-5" | 13'-5" | 16'-11" | 13'-5" | 11'-9" | 15'-5" | 12'-2" | 10'-8" |
| | 16 | | 17'-7" | 14'-0" | 12'-2" | 15'-5" | 12'-2" | 10'-8" | 14'-0" | 11'-1" | 9'-8" |
| | 24 | | 15'-5" | 12'-2" | 10'-8" | 13'-5" | 10'-8" | 9'-4" | 11'-11" | 9'-8" | 8'-6" |
| 350S125-18 | 12 | 33 | 14'-0" | 13'-10" | 12'-1" | 11'-6" | 11'-6" | 10'-7" | 9'-11" | 9'-11" | 9'-7" |
| | 16 | | 12'-2" | 12'-2" | 11'-0" | 9'-11" | 9'-11" | 9'-7" | 8'-7" | 8'-7" | 8'-7" |
| | 24 | | 9'-11" | 9'-11" | 9'-7" | 8'-1" | 8'-1" | 8'-1" | 7'-0" | 7'-0" | 7'-0" |
| 350S125-27 | 12 | 33 | 18'-10" | 16'-1" | 14'-0" | 15'-5" | 14'-0" | 12'-3" | 13'-4" | 12'-9" | 11'-1" |
| | 16 | | 16'-4" | 14'-7" | 12'-9" | 13'-4" | 12'-9" | 11'-1" | 11'-7" | 11'-7" | 10'-1" |
| | 24 | | 13'-4" | 12'-9" | 11'-1" | 10'-11" | 10'-11" | 9'-9" | 9'-5" | 9'-5" | 8'-10" |
| 350S125-30 | 12 | 33 | 20'-3" | 16'-7" | 14'-6" | 16'-6" | 14'-6" | 12'-8" | 14'-4" | 13'-2" | 11'-6" |
| | 16 | | 17'-6" | 15'-0" | 13'-2" | 14'-4" | 13'-2" | 11'-6" | 12'-5" | 11'-11" | 10'-5" |
| | 24 | | 14'-4" | 13'-2" | 11'-6" | 11'-8" | 11'-6" | 10'-0" | 10'-1" | 10'-1" | 9'-1" |
| 350S125-33 | 12 | 33 | 21'-7" | 17'-1" | 14'-11" | 17'-10" | 14'-11" | 13'-1" | 15'-5" | 13'-7" | 11'-10" |
| | 16 | | 18'-11" | 15'-7" | 13'-7" | 15'-5" | 13'-7" | 11'-10" | 13'-4" | 12'-4" | 10'-9" |
| | 24 | | 15'-5" | 13'-7" | 11'-10" | 12'-7" | 11'-10" | 10'-4" | 10'-11" | 10'-9" | 9'-5" |
| 350S125-43 | 12 | 33 | 23'-6" | 18'-8" | 16'-3" | 20'-6" | 16'-3" | 14'-3" | 18'-8" | 14'-10" | 12'-11" |
| | 16 | | 21'-4" | 16'-11" | 14'-10" | 18'-8" | 14'-10" | 12'-11" | 16'-2" | 13'-5" | 11'-9" |
| | 24 | | 18'-8" | 14'-10" | 12'-11" | 15'-3" | 12'-11" | 11'-4" | 13'-3" | 11'-9" | 10'-3" |
| 350S125-54 | 12 | 33 | 25'-2" | 20'-0" | 17'-5" | 22'-0" | 17'-5" | 15'-3" | 20'-0" | 15'-10" | 13'-10" |
| | 16 | | 22'-10" | 18'-2" | 15'-10" | 20'-0" | 15'-10" | 13'-10" | 18'-1" | 14'-5" | 12'-7" |
| | 24 | | 20'-0" | 15'-10" | 13'-10" | 17'-1" | 13'-10" | 12'-1" | 14'-10" | 12'-7" | 11'-0" |
| 362S125-18 | 12 | 33 | 14'-4" | 14'-3" | 12'-5" | 11'-8" | 11'-8" | 10'-10" | 10'-1" | 10'-1" | 9'-10" |
| | 16 | | 12'-5" | 12'-5" | 11'-4" | 10'-1" | 10'-1" | 9'-10" | 8'-9" | 8'-9" | 8'-9" |
| | 24 | | 10'-1" | 10'-1" | 9'-10" | 8'-3" | 8'-3" | 8'-3" | 7'-2" | 7'-2" | 7'-2" |
| 362S125-27 | 12 | 33 | 19'-3" | 16'-6" | 14'-5" | 15'-9" | 14'-5" | 12'-7" | 13'-7" | 13'-1" | 11'-5" |
| | 16 | | 16'-8" | 15'-0" | 13'-1" | 13'-7" | 13'-1" | 11'-5" | 11'-9" | 11'-9" | 10'-5" |
| | 24 | | 13'-7" | 13'-1" | 11'-5" | 11'-1" | 11'-1" | 10'-0" | 9'-8" | 9'-8" | 9'-1" |

See Interior Non-Structural Non-Composite Table Notes

# Interior Non-Structural Non-Composite

| Stud Member | Spacing, in, oc | Fy, ksi | 5 psf | | | 7.5 psf | | | 10 psf | | |
|---|---|---|---|---|---|---|---|---|---|---|---|
| | | | L/120 | L/240 | L/360 | L/120 | L/240 | L/360 | L/120 | L/240 | L/360 |
| 362S125-30 | 12 | 33 | 20'-8" | 17'-0" | 14'-10" | 16'-11" | 14'-10" | 13'-0" | 14'-7" | 13'-6" | 11'-10" |
| | 16 | | 17'-11" | 15'-5" | 13'-6" | 14'-7" | 13'-6" | 11'-10" | 12'-8" | 12'-3" | 10'-9" |
| | 24 | | 14'-7" | 13'-6" | 11'-10" | 11'-11" | 11'-10" | 10'-4" | 10'-4" | 10'-4" | 9'-4" |
| 362S125-33 | 12 | 33 | 22'-2" | 17'-7" | 15'-4" | 18'-3" | 15'-4" | 13'-5" | 15'-9" | 14'-0" | 12'-2" |
| | 16 | | 19'-4" | 16'-0" | 14'-0" | 15'-9" | 14'-0" | 12'-2" | 13'-8" | 12'-8" | 11'-1" |
| | 24 | | 15'-9" | 14'-0" | 12'-2" | 12'-11" | 12'-2" | 10'-8" | 11'-2" | 11'-1" | 9'-8" |
| 362S125-43 | 12 | 33 | 24'-2" | 19'-2" | 16'-9" | 21'-1" | 16'-9" | 14'-8" | 19'-1" | 15'-3" | 13'-3" |
| | 16 | | 21'-11" | 17'-5" | 15'-3" | 19'-1" | 15'-3" | 13'-3" | 16'-7" | 13'-10" | 12'-1" |
| | 24 | | 19'-1" | 15'-3" | 13'-3" | 15'-7" | 13'-3" | 11'-7" | 13'-6" | 12'-1" | 10'-7" |
| 362S125-54 | 12 | 33 | 25'-11" | 20'-7" | 17'-11" | 22'-7" | 17'-11" | 15'-8" | 20'-7" | 16'-4" | 14'-3" |
| | 16 | | 23'-6" | 18'-8" | 16'-4" | 20'-7" | 16'-4" | 14'-3" | 18'-7" | 14'-10" | 12'-11" |
| | 24 | | 20'-7" | 16'-4" | 14'-3" | 17'-6" | 14'-3" | 12'-5" | 15'-2" | 12'-11" | 11'-4" |
| 400S125-181 | 12 | 33 | 13'-10" | 13'-10" | 13'-5" | 11'-3" | 11'-3" | 11'-3" | 9'-9" | 9'-9" | 9'-9" |
| | 16 | | 12'-0" | 12'-0" | 12'-0" | 9'-9" | 9'-9" | 9'-9" | 8'-6" | 8'-6" | 8'-6" |
| | 24 | | 9'-9" | 9'-9" | 9'-9" | 8'-0" | 8'-0" | 8'-0" | 6'-11" | 6'-11" | 6'-11" |
| 400S125-27 | 12 | 33 | 20'-5" | 17'-10" | 15'-7" | 16'-8" | 15'-7" | 13'-7" | 14'-5" | 14'-2" | 12'-4" |
| | 16 | | 17'-8" | 16'-2" | 14'-2" | 14'-5" | 14'-2" | 12'-4" | 12'-6" | 12'-6" | 11'-3" |
| | 24 | | 14'-5" | 14'-2" | 12'-4" | 11'-9" | 11'-9" | 10'-9" | 10'-2" | 10'-2" | 9'-10" |
| 400S125-30 | 12 | 33 | 21'-11" | 18'-5" | 16'-1" | 17'-11" | 16'-1" | 14'-0" | 15'-6" | 14'-7" | 12'-9" |
| | 16 | | 19'-0" | 16'-8" | 14'-7" | 15'-6" | 14'-7" | 12'-9" | 13'-5" | 13'-3" | 11'-7" |
| | 24 | | 15'-6" | 14'-7" | 12'-9" | 12'-8" | 12'-8" | 11'-2" | 11'-0" | 11'-0" | 10'-1" |
| 400S125-33 | 12 | 33 | 23'-8" | 19'-0" | 16'-7" | 19'-4" | 16'-7" | 14'-6" | 16'-9" | 15'-1" | 13'-2" |
| | 16 | | 20'-6" | 17'-3" | 15'-1" | 16'-9" | 15'-1" | 13'-2" | 14'-6" | 13'-8" | 12'-0" |
| | 24 | | 16'-9" | 15'-1" | 13'-2" | 13'-8" | 13'-2" | 11'-6" | 11'-10" | 11'-10" | 10'-6" |
| 400S125-43 | 12 | 33 | 26'-1" | 20'-9" | 18'-1" | 22'-10" | 18'-1" | 15'-10" | 20'-4" | 16'-5" | 14'-4" |
| | 16 | | 23'-9" | 18'-10" | 16'-5" | 20'-4" | 16'-5" | 14'-4" | 17'-7" | 14'-11" | 13'-1" |
| | 24 | | 20'-4" | 16'-5" | 14'-4" | 16'-7" | 14'-4" | 12'-7" | 14'-5" | 13'-1" | 11'-5" |
| 400S125-54 | 12 | 33 | 28'-0" | 22'-3" | 19'-5" | 24'-5" | 19'-5" | 16'-11" | 22'-3" | 17'-8" | 15'-5" |
| | 16 | | 25'-5" | 20'-2" | 17'-8" | 22'-3" | 17'-8" | 15'-5" | 19'-10" | 16'-0" | 14'-0" |
| | 24 | | 22'-3" | 17'-8" | 15'-5" | 18'-9" | 15'-5" | 13'-5" | 16'-3" | 14'-0" | 12'-3" |
| 550S125-182 | 12 | 33 | 16'-11" | 16'-11" | 16'-9" | 13'-9" | 13'-9" | 13'-9" | 11'-11" | 11'-11" | 11'-11" |
| | 16 | | 14'-7" | 14'-7" | 14'-7" | 11'-11" | 11'-11" | 11'-11" | 10'-4" | 10'-4" | 10'-4" |
| | 24 | | 11'-11" | 11'-11" | 11'-11" | 9'-9" | 9'-9" | 9'-9" | 8'-5" | 8'-5" | 8'-5" |
| 550S125-27 | 12 | 33 | 25'-0" | 22'-9" | 19'-11" | 20'-5" | 19'-11" | 17'-5" | 17'-8" | 17'-8" | 15'-9" |
| | 16 | | 21'-8" | 20'-8" | 18'-1" | 17'-8" | 17'-8" | 15'-9" | 15'-4" | 15'-4" | 14'-4" |
| | 24 | | 17'-8" | 17'-8" | 15'-9" | 14'-5" | 14'-5" | 13'-9" | 12'-6" | 12'-6" | 12'-6" |
| 550S125-30 | 12 | 33 | 26'-11" | 23'-7" | 20'-7" | 22'-0" | 20'-7" | 18'-0" | 19'-0" | 18'-9" | 16'-4" |
| | 16 | | 23'-4" | 21'-5" | 18'-9" | 19'-0" | 18'-9" | 16'-4" | 16'-6" | 16'-6" | 14'-10" |
| | 24 | | 19'-0" | 18'-9" | 16'-4" | 15'-7" | 15'-7" | 14'-3" | 13'-6" | 13'-6" | 13'-0" |
| 550S125-33 | 12 | 33 | 29'-1" | 24'-5" | 21'-4" | 23'-9" | 21'-4" | 18'-8" | 20'-7" | 19'-5" | 16'-11" |
| | 16 | | 25'-2" | 22'-3" | 19'-5" | 20'-7" | 19'-5" | 16'-11" | 17'-10" | 17'-8" | 15'-5" |
| | 24 | | 20'-7" | 19'-5" | 16'-11" | 16'-10" | 16'-10" | 14'-10" | 14'-7" | 14'-7" | 13'-5" |
| 550S125-43 | 12 | 33 | 33'-8" | 26'-9" | 23'-4" | 29'-5" | 23'-4" | 20'-5" | 25'-5" | 21'-3" | 18'-7" |
| | 16 | | 30'-7" | 24'-4" | 21'-3" | 25'-5" | 21'-3" | 18'-7" | 22'-1" | 19'-3" | 16'-10" |
| | 24 | | 25'-5" | 21'-3" | 18'-7" | 20'-9" | 18'-7" | 16'-2" | 18'-0" | 16'-10" | 14'-9" |
| 550S125-54 | 12 | 33 | 36'-2" | 28'-9" | 25'-1" | 31'-7" | 25'-1" | 21'-11" | 28'-9" | 22'-9" | 19'-11" |
| | 16 | | 32'-10" | 26'-1" | 22'-9" | 28'-9" | 22'-9" | 19'-11" | 25'-2" | 20'-8" | 18'-1" |
| | 24 | | 28'-9" | 22'-9" | 19'-11" | 23'-9" | 19'-11" | 17'-5" | 20'-7" | 18'-1" | 15'-10" |
| 600S125-182 | 12 | 33 | 17'-8" | 17'-8" | 17'-8" | 14'-5" | 14'-5" | 14'-5" | 12'-6" | 12'-6" | 12'-6" |
| | 16 | | 15'-4" | 15'-4" | 15'-4" | 12'-6" | 12'-6" | 12'-6" | 10'-10" | 10'-10" | 10'-10" |
| | 24 | | 12'-6" | 12'-6" | 12'-6" | 10'-3" | 10'-3" | 10'-3" | 8'-2" | 8'-2" | 8'-2" |
| 600S125-271 | 12 | 33 | 24'-0" | 24'-0" | 21'-3" | 19'-7" | 19'-7" | 18'-7" | 17'-0" | 17'-0" | 16'-11" |
| | 16 | | 20'-10" | 20'-10" | 19'-4" | 17'-0" | 17'-0" | 16'-11" | 14'-8" | 14'-8" | 14'-8" |
| | 24 | | 17'-0" | 17'-0" | 16'-11" | 13'-10" | 13'-10" | 13'-10" | 12'-0" | 12'-0" | 12'-0" |

See Interior Non-Structural Non-Composite Table Notes

# Interior Non-Structural Non-Composite

| Stud Member | Spacing, in, oc | Fy, ksi | 5 psf | | | 7.5 psf | | | 10 psf | | |
|---|---|---|---|---|---|---|---|---|---|---|---|
| | | | L/120 | L/240 | L/360 | L/120 | L/240 | L/360 | L/120 | L/240 | L/360 |
| 600S125-30 | 12 | 33 | 28'-3" | 25'-3" | 22'-0" | 23'-1" | 22'-0" | 19'-3" | 20'-0" | 20'-0" | 17'-6" |
| | 16 | | 24'-6" | 22'-11" | 20'-0" | 20'-0" | 20'-0" | 17'-6" | 17'-4" | 17'-4" | 15'-11" |
| | 24 | | 20'-0" | 20'-0" | 17'-6" | 16'-4" | 16'-4" | 15'-3" | 14'-2" | 14'-2" | 13'-10" |
| 600S125-33 | 12 | 33 | 30'-7" | 26'-2" | 22'-10" | 25'-0" | 22'-10" | 20'-0" | 21'-7" | 20'-9" | 18'-2" |
| | 16 | | 26'-6" | 23'-9" | 20'-9" | 21'-7" | 20'-9" | 18'-2" | 18'-9" | 18'-9" | 16'-6" |
| | 24 | | 21'-7" | 20'-9" | 18'-2" | 17'-8" | 17'-8" | 15'-10" | 15'-3" | 15'-3" | 14'-5" |
| 600S125-43 | 12 | 33 | 36'-2" | 28'-9" | 25'-1" | 30'-11" | 25'-1" | 21'-11" | 26'-9" | 22'-10" | 19'-11" |
| | 16 | | 32'-9" | 26'-1" | 22'-10" | 26'-9" | 22'-10" | 19'-11" | 23'-2" | 20'-9" | 18'-1" |
| | 24 | | 26'-9" | 22'-10" | 19'-11" | 21'-10" | 19'-11" | 17'-5" | 18'-11" | 18'-1" | 15'-10" |
| 600S125-54 | 12 | 33 | 38'-10" | 30'-10" | 26'-11" | 33'-11" | 26'-11" | 23'-6" | 30'-10" | 24'-6" | 21'-5" |
| | 16 | | 35'-4" | 28'-0" | 24'-6" | 30'-10" | 24'-6" | 21'-5" | 26'-8" | 22'-3" | 19'-5" |
| | 24 | | 30'-10" | 24'-6" | 21'-5" | 25'-2" | 21'-5" | 18'-8" | 21'-9" | 19'-5" | 17'-0" |
| 800S125-33 | 12 | 33 | 32'-11" | 32'-8" | 28'-7" | 26'-10" | 26'-10" | 24'-11" | 23'-3" | 23'-3" | 22'-8" |
| | 16 | | 28'-6" | 28'-6" | 25'-11" | 23'-3" | 23'-3" | 22'-8" | 20'-2" | 20'-2" | 20'-2" |
| | 24 | | 23'-3" | 23'-3" | 22'-8" | 19'-0" | 19'-0" | 19'-0" | 16'-5" | 16'-5" | 16'-5" |
| 800S125-43 | 12 | 33 | 44'-5" | 36'-2" | 31'-7" | 36'-4" | 31'-7" | 27'-7" | 31'-5" | 28'-8" | 25'-1" |
| | 16 | | 38'-6" | 32'-10" | 28'-8" | 31'-5" | 28'-8" | 25'-1" | 27'-3" | 26'-1" | 22'-9" |
| | 24 | | 31'-5" | 28'-8" | 25'-1" | 25'-8" | 25'-1" | 21'-11" | 22'-3" | 22'-3" | 19'-11" |
| 800S125-54 | 12 | 33 | 49'-4" | 39'-2" | 34'-2" | 42'-3" | 34'-2" | 29'-10" | 36'-7" | 31'-1" | 27'-2" |
| | 16 | | 44'-10" | 35'-7" | 31'-1" | 36'-7" | 31'-1" | 27'-2" | 31'-9" | 28'-3" | 24'-8" |
| | 24 | | 36'-7" | 31'-1" | 27'-2" | 29'-11" | 27'-2" | 23'-8" | 25'-11" | 24'-8" | 21'-6" |

See Interior Non-Structural Non-Composite Table Notes



# Limiting Wall Heights - Curtain Wall Single Span

## Wall Height Table Notes

1. Lateral loads have not been modified for strength checks: full loads are applied.
2. Calculated properties are based on AISI S100-16/S2-20, North American Specification for Cold-Formed Steel Structural Members.
3. For 15 psf or higher wind pressure, read the note below.

   IBC 2021/ASCE 7-16: Due to the change in the model building codes, design wind pressures determined using IBC 2021/ASCE 7-16 or later are strength level loads (LRFD) in comparison to those determined in earlier IBC codes which were service level loads (ASD). The load/span tables that follow are based on service level (ASD) wind loads. Therefore, to properly use the load/span tables in this catalog, multiply the IBC 2021/ASCE 7-16 design wind pressures by 0.6 (Reference Section 2.4 ASCE 7-16) prior to entering the load/span tables.
   Example:
   • ASCE 7-16 Calculated Design Wind Pressure = 25 psf (Strength level loads, LRFD)
   • Convert to service level loads (ASD) = 25 psf x 0.6 = 15 psf
   • Use 15 psf as the Pressure Value used in this Table to determine the member span

   Any Other Building Code: The load/span tables that follow are based on service level (ASD) wind loads. If the wind load being used meets this criterion, it does not need to be modified prior to using the tables.
4. 15 psf and higher wind pressures have been multiplied by 0.7 x ASD loads, or 0.42 x Ultimate loads for deflection determination, in accordance with footnote "f" of IBC table 1604.3. The 5 psf live load has not been reduced for deflection checks
5. Limiting heights are based on continuous support of each flange over the full length of the stud.
6. Limiting heights are based on steel properties alone (non-composite).
7. Web crippling checks are based on end-one flange loading condition using 1-inch end bearing.
8. End shear and web crippling capacity have not been reduced for punchouts. Punchouts are assumed to be at least 10-inches from the end of members, in accordance with AISI S240-20, Section A5.9.
9. Where limiting heights are followed by "e", web stiffeners are required.

# Wall Height

| Stud Member | Spacing, in, oc | Fy, ksi | 5 psf | | | 15 psf | | | 20 psf | | | 25 psf | | | 30 psf | | | 35 psf | | | 40 psf | | |
|---|---|---|---|---|---|---|---|---|---|---|---|---|---|---|---|---|---|---|---|---|---|---|---|
| | | | L/120 | L/240 | L/360 | L/240 | L/360 | L/600 | L/240 | L/360 | L/600 | L/240 | L/360 | L/600 | L/240 | L/360 | L/600 | L/240 | L/360 | L/600 | L/240 | L/360 | L/600 |
| 250S137-33 | 12 | 33 | 17'-6" | 13'-10" | 12'-1" | 10'-10" | 9'-5" | 8'-0" | 9'-10" | 8'-7" | 7'-3" | 9'-1" | 8'-0" | 6'-9" | 8'-3" | 7'-6" | 6'-4" | 7'-8" | 7'-2" | 6'-0" | 7'-2"e | 6'-10" | 5'-9" |
| | 16 | | 15'-10" | 12'-7" | 11'-0" | 9'-10" | 8'-7" | 7'-3" | 8'-10" | 7'-10" | 6'-7" | 7'-10" | 7'-3" | 6'-1" | 7'-2"e | 6'-10" | 5'-9" | 6'-8"e | 6'-6"e | 5'-6" | 6'-3"e | 6'-2"e | 5'-3" |
| | 24 | | 13'-10" | 11'-0" | 9'-7" | 8'-3" | 7'-6" | 6'-4" | 7'-2"e | 6'-10" | 5'-9" | 6'-5"e | 6'-4"e | 5'-4" | 5'-10"e | 5'-10"e | 5'-0"e | 5'-5"e | 5'-5"e | 4'-9"e | 5'-1"e | 5'-1"e | 4'-7"e |
| 250S137-43 | 12 | 33 | 19'-0" | 15'-1" | 13'-2" | 11'-9" | 10'-3" | 8'-8" | 10'-8" | 9'-4" | 7'-10" | 9'-11" | 8'-8" | 7'-4" | 9'-4" | 8'-2" | 6'-11" | 8'-10" | 7'-9" | 6'-6" | 8'-5" | 7'-5" | 6'-3" |
| | 16 | | 17'-3" | 13'-8" | 11'-11" | 10'-8" | 9'-4" | 7'-10" | 9'-9" | 8'-6" | 7'-2" | 9'-0" | 7'-10" | 6'-8" | 8'-5" | 7'-5" | 6'-3" | 7'-10" | 7'-0" | 5'-11" | 7'-3" | 6'-9" | 5'-8" |
| | 24 | | 15'-1" | 11'-11" | 10'-5" | 9'-4" | 8'-2" | 6'-11" | 8'-5" | 7'-5" | 6'-3" | 7'-6" | 6'-11" | 5'-10" | 6'-10" | 6'-6" | 5'-6" | 6'-4" | 6'-2" | 5'-2" | 5'-11" | 5'-11" | 5'-0" |
| 250S137-54 | 12 | 33 | 20'-3" | 16'-1" | 14'-1" | 12'-7" | 11'-0" | 9'-3" | 11'-5" | 10'-0" | 8'-5" | 10'-7" | 9'-3" | 7'-10" | 10'-0" | 8'-9" | 7'-4" | 9'-6" | 8'-3" | 7'-0" | 9'-1" | 7'-11" | 6'-8" |
| | 16 | | 18'-5" | 14'-8" | 12'-9" | 11'-5" | 10'-0" | 8'-5" | 10'-5" | 9'-1" | 7'-8" | 9'-8" | 8'-5" | 7'-1" | 9'-1" | 7'-11" | 6'-8" | 8'-7" | 7'-6" | 6'-4" | 8'-3" | 7'-2" | 6'-1" |
| | 24 | | 16'-1" | 12'-9" | 11'-2" | 10'-0" | 8'-9" | 7'-4" | 9'-1" | 7'-11" | 6'-8" | 8'-5" | 7'-4" | 6'-2" | 7'-11" | 6'-11" | 5'-10" | 7'-5" | 6'-7" | 5'-7" | 6'-11" | 6'-3" | 5'-4" |
| 250S137-54 | 12 | 50 | 20'-3" | 16'-1" | 14'-1" | 12'-7" | 11'-0" | 9'-3" | 11'-5" | 10'-0" | 8'-5" | 10'-7" | 9'-3" | 7'-10" | 10'-0" | 8'-9" | 7'-4" | 9'-6" | 8'-3" | 7'-0" | 9'-1" | 7'-11" | 6'-8" |
| | 16 | | 18'-5" | 14'-8" | 12'-9" | 11'-5" | 10'-0" | 8'-5" | 10'-5" | 9'-1" | 7'-8" | 9'-8" | 8'-5" | 7'-1" | 9'-1" | 7'-11" | 6'-8" | 8'-7" | 7'-6" | 6'-4" | 8'-3" | 7'-2" | 6'-1" |
| | 24 | | 16'-1" | 12'-9" | 11'-2" | 10'-0" | 8'-9" | 7'-4" | 9'-1" | 7'-11" | 6'-8" | 8'-5" | 7'-4" | 6'-2" | 7'-11" | 6'-11" | 5'-10" | 7'-6" | 6'-7" | 5'-7" | 7'-2" | 6'-3" | 5'-4" |
| 250S137-68 | 12 | 50 | 21'-8" | 17'-2" | 15'-0" | 13'-5" | 11'-9" | 9'-11" | 12'-2" | 10'-8" | 9'-0" | 11'-4" | 9'-11" | 8'-4" | 10'-8" | 9'-4" | 7'-10" | 10'-1" | 8'-10" | 7'-5" | 9'-8" | 8'-5" | 7'-1" |
| | 16 | | 19'-8" | 15'-7" | 13'-8" | 12'-2" | 10'-8" | 9'-0" | 11'-1" | 9'-8" | 8'-2" | 10'-3" | 9'-0" | 7'-7" | 9'-8" | 8'-5" | 7'-1" | 9'-2" | 8'-0" | 6'-9" | 8'-9" | 7'-8" | 6'-6" |
| | 24 | | 17'-2" | 13'-8" | 11'-11" | 10'-8" | 9'-4" | 7'-10" | 9'-8" | 8'-5" | 7'-1" | 9'-0" | 7'-10" | 6'-7" | 8'-5" | 7'-5" | 6'-3" | 8'-0" | 7'-0" | 5'-11" | 7'-8" | 6'-8" | 5'-8" |
| 250S162-33 | 12 | 33 | 18'-4" | 14'-7" | 12'-9" | 11'-4" | 9'-11" | 8'-5" | 10'-4" | 9'-0" | 7'-7" | 9'-7" | 8'-5" | 7'-1" | 8'-10" | 7'-11" | 6'-8" | 8'-3" | 7'-6" | 6'-4" | 7'-8"e | 7'-2" | 6'-0" |
| | 16 | | 16'-8" | 13'-3" | 11'-7" | 10'-4" | 9'-0" | 7'-7" | 9'-5" | 8'-2" | 6'-11" | 8'-5" | 7'-7" | 6'-5" | 7'-8"e | 7'-2" | 6'-0" | 7'-1"e | 6'-10"e | 5'-9" | 6'-8"e | 6'-6"e | 5'-6" |
| | 24 | | 14'-7" | 11'-7" | 10'-1" | 8'-10" | 7'-11" | 6'-8" | 7'-8"e | 7'-2" | 6'-0" | 6'-10"e | 6'-8"e | 5'-7" | 6'-3"e | 6'-3"e | 5'-3"e | 5'-10"e | 5'-10"e | 5'-0"e | 5'-5"e | 5'-5"e | 4'-10"e |
| 250S162-43 | 12 | 33 | 19'-11" | 15'-10" | 13'-10" | 12'-4" | 10'-10" | 9'-1" | 11'-3" | 9'-10" | 8'-3" | 10'-5" | 9'-1" | 7'-8" | 9'-10" | 8'-7" | 7'-3" | 9'-4" | 8'-2" | 6'-10" | 8'-11" | 7'-9" | 6'-7" |
| | 16 | | 18'-1" | 14'-5" | 12'-7" | 11'-3" | 9'-10" | 8'-3" | 10'-2" | 8'-11" | 7'-6" | 9'-6" | 8'-3" | 7'-0" | 8'-11" | 7'-9" | 6'-7" | 8'-6" | 7'-5" | 6'-3" | 8'-0" | 7'-1" | 6'-0" |
| | 24 | | 15'-10" | 12'-7" | 11'-0" | 9'-10" | 8'-7" | 7'-3" | 8'-11" | 7'-9" | 6'-7" | 8'-3" | 7'-3" | 6'-1" | 7'-7" | 6'-10" | 5'-9" | 7'-0" | 6'-6" | 5'-5" | 6'-7" | 6'-2" | 5'-3" |
| 250S162-54 | 12 | 33 | 21'-4" | 16'-11" | 14'-9" | 13'-3" | 11'-7" | 9'-9" | 12'-0" | 10'-6" | 8'-10" | 11'-2" | 9'-9" | 8'-3" | 10'-6" | 9'-2" | 7'-9" | 10'-0" | 8'-8" | 7'-4" | 9'-6" | 8'-4" | 7'-0" |
| | 16 | | 19'-5" | 15'-5" | 13'-5" | 12'-0" | 10'-6" | 8'-10" | 10'-11" | 9'-6" | 8'-0" | 10'-2" | 8'-10" | 7'-6" | 9'-6" | 8'-4" | 7'-0" | 9'-1" | 7'-11" | 6'-8" | 8'-8" | 7'-7" | 6'-5" |
| | 24 | | 16'-11" | 13'-5" | 11'-9" | 10'-6" | 9'-2" | 7'-9" | 9'-6" | 8'-4" | 7'-0" | 8'-10" | 7'-9" | 6'-6" | 8'-4" | 7'-3" | 6'-2" | 7'-11" | 6'-11" | 5'-10" | 7'-5" | 6'-7" | 5'-7" |
| 250S162-54 | 12 | 50 | 21'-4" | 16'-11" | 14'-9" | 13'-3" | 11'-7" | 9'-9" | 12'-0" | 10'-6" | 8'-10" | 11'-2" | 9'-9" | 8'-3" | 10'-6" | 9'-2" | 7'-9" | 10'-0" | 8'-8" | 7'-4" | 9'-6" | 8'-4" | 7'-0" |
| | 16 | | 19'-5" | 15'-5" | 13'-5" | 12'-0" | 10'-6" | 8'-10" | 10'-11" | 9'-6" | 8'-0" | 10'-2" | 8'-10" | 7'-6" | 9'-6" | 8'-4" | 7'-0" | 9'-1" | 7'-11" | 6'-8" | 8'-8" | 7'-7" | 6'-5" |
| | 24 | | 16'-11" | 13'-5" | 11'-9" | 10'-6" | 9'-2" | 7'-9" | 9'-6" | 8'-4" | 7'-0" | 8'-10" | 7'-9" | 6'-6" | 8'-4" | 7'-3" | 6'-2" | 7'-11" | 6'-11" | 5'-10" | 7'-7" | 6'-7" | 5'-7" |
| 250S162-68 | 12 | 50 | 22'-9" | 18'-1" | 15'-10" | 14'-1" | 12'-4" | 10'-5" | 12'-10" | 11'-2" | 9'-5" | 11'-11" | 10'-5" | 8'-9" | 11'-2" | 9'-9" | 8'-3" | 10'-8" | 9'-4" | 7'-10" | 10'-2" | 8'-11" | 7'-6" |
| | 16 | | 20'-8" | 16'-5" | 14'-4" | 12'-10" | 11'-2" | 9'-5" | 11'-8" | 10'-2" | 8'-7" | 10'-10" | 9'-5" | 8'-0" | 10'-2" | 8'-11" | 7'-6" | 9'-8" | 8'-5" | 7'-1" | 9'-3" | 8'-1" | 6'-10" |
| | 24 | | 18'-1" | 14'-4" | 12'-6" | 11'-2" | 9'-9" | 8'-3" | 10'-2" | 8'-11" | 7'-6" | 9'-5" | 8'-3" | 7'-0" | 8'-11" | 7'-9" | 6'-7" | 8'-5" | 7'-5" | 6'-3" | 8'-1" | 7'-1" | 5'-11" |
| 350S162-33 | 12 | 33 | 23'-9" | 18'-10" | 16'-5" | 14'-8" | 12'-10" | 10'-10" | 13'-2"e | 11'-8" | 9'-10" | 11'-10"e | 10'-10"e | 9'-2" | 10'-9"e | 10'-2"e | 8'-7" | 10'-0"e | 9'-8"e | 8'-2"e | 9'-4"e | 9'-3"e | 7'-10"e |
| | 16 | | 21'-7" | 17'-1" | 14'-11" | 13'-2"e | 11'-8" | 9'-10" | 11'-5"e | 10'-7"e | 8'-11" | 10'-3"e | 9'-10"e | 8'-4"e | 9'-4"e | 9'-3"e | 7'-10"e | 8'-8"e | 8'-8"e | 7'-5"e | 8'-1"e | 8'-1"e | 7'-1"e |
| | 24 | | 18'-8" | 14'-11" | 13'-1" | 10'-9"e | 10'-2"e | 8'-7" | 9'-4"e | 9'-3"e | 7'-10"e | 8'-4"e | 8'-4"e | 7'-3"e | 7'-7"e | 7'-7"e | 6'-10"e | 7'-1"e | 7'-1"e | 6'-6"e | 6'-7"e | 6'-7"e | 6'-2"e |
| 350S162-43 | 12 | 33 | 25'-10" | 20'-6" | 17'-11" | 16'-0" | 14'-0" | 11'-9" | 14'-6" | 12'-8" | 10'-8" | 13'-6" | 11'-9" | 9'-11" | 12'-8" | 11'-1" | 9'-4" | 11'-8" | 10'-6" | 8'-11" | 10'-11" | 10'-1" | 8'-6" |
| | 16 | | 23'-5" | 18'-7" | 16'-3" | 14'-6" | 12'-8" | 10'-8" | 13'-2" | 11'-6" | 9'-9" | 12'-0" | 10'-8" | 9'-0" | 10'-11" | 10'-1" | 8'-6" | 10'-2" | 9'-7" | 8'-1" | 9'-6" | 9'-2" | 7'-9" |
| | 24 | | 20'-6" | 16'-3" | 14'-2" | 12'-8" | 11'-1" | 9'-4" | 10'-11" | 10'-1" | 8'-6" | 9'-9" | 9'-4" | 7'-11" | 8'-11"e | 8'-10"e | 7'-5" | 8'-3"e | 8'-3"e | 7'-1" | 7'-9"e | 7'-9"e | 6'-9"e |
| 350S162-54 | 12 | 33 | 27'-8" | 21'-11" | 19'-2" | 17'-2" | 15'-0" | 12'-7" | 15'-7" | 13'-7" | 11'-6" | 14'-5" | 12'-7" | 10'-8" | 13'-7" | 11'-11" | 10'-0" | 12'-11" | 11'-3" | 9'-6" | 12'-4" | 10'-9" | 9'-1" |
| | 16 | | 25'-1" | 19'-11" | 17'-5" | 15'-7" | 13'-7" | 11'-6" | 14'-2" | 12'-4" | 10'-5" | 13'-1" | 11'-6" | 9'-8" | 12'-4" | 10'-9" | 9'-1" | 11'-9" | 10'-3" | 8'-8" | 11'-2" | 9'-10" | 8'-3" |
| | 24 | | 21'-11" | 17'-5" | 15'-2" | 13'-7" | 11'-11" | 10'-0" | 12'-4" | 10'-9" | 9'-1" | 11'-6" | 10'-0" | 8'-5" | 10'-7" | 9'-5" | 7'-11" | 9'-9" | 8'-11" | 7'-7" | 9'-2" | 8'-7" | 7'-3" |
| 350S162-54 | 12 | 50 | 27'-8" | 21'-11" | 19'-2" | 17'-2" | 15'-0" | 12'-7" | 15'-7" | 13'-7" | 11'-6" | 14'-5" | 12'-7" | 10'-8" | 13'-7" | 11'-11" | 10'-0" | 12'-11" | 11'-3" | 9'-6" | 12'-4" | 10'-9" | 9'-1" |
| | 16 | | 25'-1" | 19'-11" | 17'-5" | 15'-7" | 13'-7" | 11'-6" | 14'-2" | 12'-4" | 10'-5" | 13'-1" | 11'-6" | 9'-8" | 12'-4" | 10'-9" | 9'-1" | 11'-9" | 10'-3" | 8'-8" | 11'-3" | 9'-10" | 8'-3" |
| | 24 | | 21'-11" | 17'-5" | 15'-2" | 13'-7" | 11'-11" | 10'-0" | 12'-4" | 10'-9" | 9'-1" | 11'-6" | 10'-0" | 8'-5" | 10'-9" | 9'-5" | 7'-11" | 10'-3" | 8'-11" | 7'-7" | 9'-10" | 8'-7" | 7'-3" |
| 350S162-68 | 12 | 50 | 29'-7" | 23'-6" | 20'-6" | 18'-4" | 16'-0" | 13'-6" | 16'-8" | 14'-7" | 12'-3" | 15'-5" | 13'-6" | 11'-5" | 14'-7" | 12'-8" | 10'-9" | 13'-10" | 12'-1" | 10'-2" | 13'-3" | 11'-7" | 9'-9" |
| | 16 | | 26'-10" | 21'-4" | 18'-7" | 16'-8" | 14'-7" | 12'-3" | 15'-1" | 13'-3" | 11'-2" | 14'-0" | 12'-3" | 10'-4" | 13'-3" | 11'-7" | 9'-9" | 12'-7" | 11'-0" | 9'-3" | 12'-0" | 10'-6" | 8'-10" |
| | 24 | | 23'-6" | 18'-7" | 16'-3" | 14'-7" | 12'-8" | 10'-9" | 13'-3" | 11'-7" | 9'-9" | 12'-3" | 10'-9" | 9'-0" | 11'-7" | 10'-1" | 8'-6" | 11'-0" | 9'-7" | 8'-1" | 10'-6" | 9'-2" | 7'-9" |
| 350S162-97 | 12 | 50 | 32'-7" | 25'-11" | 22'-7" | 20'-3" | 17'-8" | 14'-11" | 18'-4" | 16'-0" | 13'-6" | 17'-1" | 14'-11" | 12'-7" | 16'-0" | 14'-0" | 11'-10" | 15'-3" | 13'-4" | 11'-3" | 14'-7" | 12'-9" | 10'-9" |
| | 16 | | 29'-8" | 23'-6" | 20'-7" | 18'-4" | 16'-0" | 13'-6" | 16'-8" | 14'-7" | 12'-4" | 15'-6" | 13'-6" | 11'-5" | 14'-7" | 12'-9" | 10'-9" | 13'-10" | 12'-1" | 10'-2" | 13'-3" | 11'-7" | 9'-9" |
| | 24 | | 25'-11" | 20'-7" | 17'-11" | 16'-0" | 14'-0" | 11'-10" | 14'-7" | 12'-9" | 10'-9" | 13'-6" | 11'-10" | 10'-0" | 12'-9" | 11'-1" | 9'-5" | 12'-1" | 10'-7" | 8'-11" | 11'-7" | 10'-1" | 8'-6" |
| 350S200-43 | 12 | 33 | 27'-3" | 21'-8" | 18'-11" | 16'-11" | 14'-9" | 12'-5" | 15'-4" | 13'-5" | 11'-4" | 14'-3" | 12'-5" | 10'-6" | 13'-5" | 11'-9" | 9'-11" | 12'-6" | 11'-1" | 9'-5" | 11'-9" | 10'-8" | 9'-0" |
| | 16 | | 24'-9" | 19'-8" | 17'-2" | 15'-4" | 13'-5" | 11'-4" | 13'-11" | 12'-2" | 10'-3" | 12'-10" | 11'-4" | 9'-6" | 11'-9" | 10'-8" | 9'-0" | 10'-10" | 10'-1" | 8'-6" | 10'-2"e | 9'-8"e | 8'-2" |
| | 24 | | 21'-8" | 17'-2" | 15'-0" | 13'-5" | 11'-9" | 9'-11" | 11'-9" | 10'-8" | 9'-0" | 10'-6"e | 9'-11" | 8'-4" | 9'-7"e | 9'-4"e | 7'-10" | 8'-10"e | 8'-10"e | 7'-5"e | 8'-4"e | 8'-4"e | 7'-1"e |
| 350S200-54 | 12 | 33 | 29'-3" | 23'-2" | 20'-3" | 18'-1" | 15'-10" | 13'-4" | 16'-5" | 14'-4" | 12'-1" | 15'-3" | 13'-4" | 11'-3" | 14'-4" | 12'-7" | 10'-7" | 13'-8" | 11'-11" | 10'-1" | 13'-1" | 11'-5" | 9'-7" |
| | 16 | | 26'-6" | 21'-1" | 18'-5" | 16'-5" | 14'-4" | 12'-1" | 14'-11" | 13'-1" | 11'-0" | 13'-10" | 12'-1" | 10'-3" | 13'-1" | 11'-5" | 9'-7" | 12'-5" | 10'-10" | 9'-2" | 11'-10" | 10'-4" | 8'-9" |
| | 24 | | 23'-2" | 18'-5" | 16'-1" | 14'-4" | 12'-7" | 10'-7" | 13'-1" | 11'-5" | 9'-7" | 12'-1" | 10'-7" | 8'-11" | 11'-4" | 10'-0" | 8'-5" | 10'-6" | 9'-6" | 8'-0" | 9'-10" | 9'-1" | 7'-8" |

See Curtain Wall Limiting Heights Table Notes

# Wall Height

| Stud Member | Spacing, in, oc | Fy, ksi | 5 psf | | | 15 psf | | | 20 psf | | | 25 psf | | | 30 psf | | | 35 psf | | | 40 psf | | |
|---|---|---|---|---|---|---|---|---|---|---|---|---|---|---|---|---|---|---|---|---|---|---|---|
| | | | L/120 | L/240 | L/360 | L/240 | L/360 | L/600 | L/240 | L/360 | L/600 | L/240 | L/360 | L/600 | L/240 | L/360 | L/600 | L/240 | L/360 | L/600 | L/240 | L/360 | L/600 |
| 350S200-54 | 12 | 50 | 29'-3" | 23'-2" | 20'-3" | 18'-1" | 15'-10" | 13'-4" | 16'-5" | 14'-4" | 12'-1" | 15'-3" | 13'-4" | 11'-3" | 14'-4" | 12'-7" | 10'-7" | 13'-8" | 11'-11" | 10'-1" | 13'-1" | 11'-5" | 9'-7" |
| | 16 | | 26'-6" | 21'-1" | 18'-5" | 16'-5" | 14'-4" | 12'-1" | 14'-11" | 13'-1" | 11'-0" | 13'-10" | 12'-1" | 10'-3" | 13'-1" | 11'-5" | 9'-7" | 12'-5" | 10'-10" | 9'-2" | 11'-10" | 10'-4" | 8'-9" |
| | 24 | | 23'-2" | 18'-5" | 16'-1" | 14'-4" | 12'-7" | 10'-7" | 13'-1" | 11'-5" | 9'-7" | 12'-1" | 10'-7" | 8'-11" | 11'-5" | 10'-0" | 8'-5" | 10'-10" | 9'-6" | 8'-0" | 10'-4" | 9'-1" | 7'-8" |
| 350S200-68 | 12 | 50 | 31'-3" | 24'-10" | 21'-8" | 19'-5" | 16'-11" | 14'-3" | 17'-7" | 15'-5" | 13'-0" | 16'-4" | 14'-3" | 12'-1" | 15'-5" | 13'-5" | 11'-4" | 14'-7" | 12'-9" | 10'-9" | 14'-0" | 12'-3" | 10'-4" |
| | 16 | | 28'-5" | 22'-7" | 19'-8" | 17'-7" | 15'-5" | 13'-0" | 16'-0" | 14'-0" | 11'-10" | 14'-10" | 13'-0" | 10'-11" | 14'-0" | 12'-3" | 10'-4" | 13'-3" | 11'-7" | 9'-9" | 12'-8" | 11'-1" | 9'-4" |
| | 24 | | 24'-10" | 19'-8" | 17'-3" | 15'-5" | 13'-5" | 11'-4" | 14'-0" | 12'-3" | 10'-4" | 13'-0" | 11'-4" | 9'-7" | 12'-3" | 10'-8" | 9'-0" | 11'-7" | 10'-2" | 8'-7" | 11'-1" | 9'-8" | 8'-2" |
| 350S200-97 | 12 | 50 | 34'-7" | 27'-5" | 24'-0" | 21'-5" | 18'-9" | 15'-10" | 19'-6" | 17'-0" | 14'-4" | 18'-1" | 15'-10" | 13'-4" | 17'-0" | 14'-10" | 12'-6" | 16'-2" | 14'-1" | 11'-11" | 15'-6" | 13'-6" | 11'-5" |
| | 16 | | 31'-5" | 24'-11" | 21'-9" | 19'-6" | 17'-0" | 14'-4" | 17'-8" | 15'-6" | 13'-0" | 16'-5" | 14'-4" | 12'-1" | 15'-6" | 13'-6" | 11'-5" | 14'-8" | 12'-10" | 10'-10" | 14'-1" | 12'-3" | 10'-4" |
| | 24 | | 27'-5" | 21'-9" | 19'-0" | 17'-0" | 14'-10" | 12'-6" | 15'-6" | 13'-6" | 11'-5" | 14'-4" | 12'-6" | 10'-7" | 13'-6" | 11'-10" | 9'-11" | 12'-10" | 11'-2" | 9'-5" | 12'-3" | 10'-9" | 9'-0" |
| 362S137-33 | 12 | 33 | 23'-3" | 18'-5" | 16'-1" | 14'-5" | 12'-7" | 10'-7" | 12'-7" | 11'-5" | 9'-8" | 11'-3"e | 10'-7"e | 8'-11" | 10'-3"e | 10'-0"e | 8'-5" | 9'-6"e | 9'-6"e | 8'-0"e | 8'-11"e | 8'-11"e | 7'-8"e |
| | 16 | | 21'-1" | 16'-9" | 14'-8" | 12'-7" | 11'-5" | 9'-8" | 10'-11"e | 10'-5"e | 8'-9" | 9'-9"e | 9'-8"e | 8'-2"e | 8'-11"e | 8'-11"e | 7'-8"e | 8'-3"e | 8'-3"e | 7'-3"e | 7'-8"e | 7'-8"e | 6'-11"e |
| | 24 | | 17'-9" | 14'-8" | 12'-10" | 10'-3"e | 10'-0"e | 8'-5" | 8'-11"e | 8'-11"e | 7'-8"e | 7'-11"e | 7'-11"e | 7'-1"e | 7'-3"e | 7'-3"e | 6'-8"e | 6'-9"e | 6'-9"e | 6'-4"e | 6'-3"e | 6'-3"e | 6'-1"e |
| 362S137-43 | 12 | 33 | 25'-3" | 20'-1" | 17'-6" | 15'-8" | 13'-8" | 11'-7" | 14'-3" | 12'-5" | 10'-6" | 13'-2" | 11'-7" | 9'-9" | 12'-0" | 10'-10" | 9'-2" | 11'-1" | 10'-4" | 8'-8" | 10'-5" | 9'-10" | 8'-4" |
| | 16 | | 23'-0" | 18'-3" | 15'-11" | 14'-3" | 12'-5" | 10'-6" | 12'-9" | 11'-4" | 9'-6" | 11'-5" | 10'-6" | 8'-10" | 10'-5" | 9'-10" | 8'-4" | 9'-7" | 9'-5" | 7'-11" | 9'-0" | 9'-0" | 7'-7" |
| | 24 | | 20'-1" | 15'-11" | 13'-11" | 12'-0" | 10'-10" | 9'-2" | 10'-5" | 9'-10" | 8'-4" | 9'-4" | 9'-2" | 7'-9" | 8'-6" | 8'-6" | 7'-3" | 7'-10"e | 7'-10"e | 6'-11" | 7'-4"e | 7'-4"e | 6'-7"e |
| 362S137-54 | 12 | 33 | 27'-1" | 21'-6" | 18'-9" | 16'-9" | 14'-8" | 12'-4" | 15'-3" | 13'-4" | 11'-3" | 14'-2" | 12'-4" | 10'-5" | 13'-4" | 11'-8" | 9'-10" | 12'-8" | 11'-1" | 9'-4" | 12'-1" | 10'-7" | 8'-11" |
| | 16 | | 24'-7" | 19'-6" | 17'-1" | 15'-3" | 13'-4" | 11'-3" | 13'-10" | 12'-1" | 10'-2" | 12'-10" | 11'-3" | 9'-6" | 12'-1" | 10'-7" | 8'-11" | 11'-3" | 10'-0" | 8'-6" | 10'-6" | 9'-7" | 8'-1" |
| | 24 | | 21'-6" | 17'-1" | 14'-11" | 13'-4" | 11'-8" | 9'-10" | 12'-1" | 10'-7" | 8'-11" | 10'-10" | 9'-10" | 8'-3" | 9'-11" | 9'-3" | 7'-9" | 9'-2" | 8'-9" | 7'-5" | 8'-7" | 8'-5" | 7'-1" |
| 362S137-54 | 12 | 50 | 27'-1" | 21'-6" | 18'-9" | 16'-9" | 14'-8" | 12'-4" | 15'-3" | 13'-4" | 11'-3" | 14'-2" | 12'-4" | 10'-5" | 13'-4" | 11'-8" | 9'-10" | 12'-8" | 11'-1" | 9'-4" | 12'-1" | 10'-7" | 8'-11" |
| | 16 | | 24'-7" | 19'-6" | 17'-1" | 15'-3" | 13'-4" | 11'-3" | 13'-10" | 12'-1" | 10'-2" | 12'-10" | 11'-3" | 9'-6" | 12'-1" | 10'-7" | 8'-11" | 11'-6" | 10'-0" | 8'-6" | 11'-0" | 9'-7" | 8'-1" |
| | 24 | | 21'-6" | 17'-1" | 14'-11" | 13'-4" | 11'-8" | 9'-10" | 12'-1" | 10'-7" | 8'-11" | 11'-3" | 9'-10" | 8'-3" | 10'-7" | 9'-3" | 7'-9" | 10'-0" | 8'-9" | 7'-5" | 9'-7" | 8'-5" | 7'-1" |
| 362S137-68 | 12 | 50 | 28'-11" | 23'-0" | 20'-1" | 17'-11" | 15'-8" | 13'-3" | 16'-3" | 14'-3" | 12'-0" | 15'-1" | 13'-3" | 11'-2" | 14'-3" | 12'-5" | 10'-6" | 13'-6" | 11'-10" | 10'-0" | 12'-11" | 11'-4" | 9'-6" |
| | 16 | | 26'-3" | 20'-10" | 18'-3" | 16'-3" | 14'-3" | 12'-0" | 14'-10" | 12'-11" | 10'-11" | 13'-9" | 12'-0" | 10'-1" | 12'-11" | 11'-4" | 9'-6" | 12'-3" | 10'-9" | 9'-1" | 11'-9" | 10'-3" | 8'-8" |
| | 24 | | 23'-0" | 18'-3" | 15'-11" | 14'-3" | 12'-5" | 10'-6" | 12'-11" | 11'-4" | 9'-6" | 12'-0" | 10'-6" | 8'-10" | 11'-4" | 9'-10" | 8'-4" | 10'-9" | 9'-4" | 7'-11" | 10'-3" | 9'-0" | 7'-7" |
| 362S162-33 | 12 | 33 | 24'-4" | 19'-4" | 16'-11" | 15'-1" | 13'-2" | 11'-1" | 13'-6"e | 12'-0" | 10'-1" | 12'-1"e | 11'-1"e | 9'-5" | 11'-0"e | 10'-6"e | 8'-10"e | 10'-2"e | 9'-11"e | 8'-5"e | 9'-6"e | 9'-6"e | 8'-0"e |
| | 16 | | 22'-2" | 17'-7" | 15'-4" | 13'-6"e | 12'-0" | 10'-1" | 11'-8"e | 10'-11"e | 9'-2" | 10'-5"e | 10'-1"e | 8'-6"e | 9'-6"e | 9'-6"e | 8'-0"e | 8'-10"e | 8'-10"e | 7'-7"e | 8'-3"e | 8'-3"e | 7'-3"e |
| | 24 | | 19'-0" | 15'-4" | 13'-5" | 11'-0"e | 10'-6"e | 8'-10"e | 9'-6"e | 9'-6"e | 8'-0"e | 8'-6"e | 8'-6"e | 7'-5"e | 7'-9"e | 7'-9"e | 7'-0"e | 7'-2"e | 7'-2"e | 6'-8"e | 6'-9"e | 6'-9"e | 6'-4"e |
| 362S162-43 | 12 | 33 | 26'-6" | 21'-0" | 18'-5" | 16'-5" | 14'-4" | 12'-1" | 14'-11" | 13'-0" | 11'-0" | 13'-10" | 12'-1" | 10'-2" | 12'-11" | 11'-5" | 9'-7" | 11'-11" | 10'-10" | 9'-2" | 11'-2" | 10'-4" | 8'-9" |
| | 16 | | 24'-1" | 19'-1" | 16'-8" | 14'-11" | 13'-0" | 11'-0" | 13'-7" | 11'-10" | 10'-0" | 12'-3" | 11'-0" | 9'-3" | 11'-2" | 10'-4" | 8'-9" | 10'-4" | 9'-10" | 8'-3" | 9'-8"e | 9'-5" | 7'-11" |
| | 24 | | 21'-0" | 16'-8" | 14'-7" | 12'-11" | 11'-5" | 9'-7" | 11'-2" | 10'-4" | 8'-9" | 10'-0" | 9'-7" | 8'-1" | 9'-2"e | 9'-0"e | 7'-7" | 8'-5"e | 8'-5"e | 7'-3" | 7'-11"e | 7'-11"e | 6'-11"e |
| 362S162-54 | 12 | 33 | 28'-5" | 22'-6" | 19'-8" | 17'-7" | 15'-4" | 13'-0" | 16'-0" | 14'-0" | 11'-9" | 14'-10" | 13'-0" | 10'-11" | 14'-0" | 12'-2" | 10'-4" | 13'-3" | 11'-7" | 9'-9" | 12'-8" | 11'-1" | 9'-4" |
| | 16 | | 25'-10" | 20'-6" | 17'-11" | 16'-0" | 14'-0" | 11'-9" | 14'-6" | 12'-8" | 10'-8" | 13'-6" | 11'-9" | 9'-11" | 12'-8" | 11'-1" | 9'-4" | 12'-1" | 10'-6" | 8'-11" | 11'-4" | 10'-1" | 8'-6" |
| | 24 | | 22'-6" | 17'-11" | 15'-8" | 14'-0" | 12'-2" | 10'-4" | 12'-8" | 11'-1" | 9'-4" | 11'-8" | 10'-4" | 8'-8" | 10'-8" | 9'-8" | 8'-2" | 9'-11" | 9'-2" | 7'-9" | 9'-3" | 8'-10" | 7'-5" |
| 362S162-54 | 12 | 50 | 28'-5" | 22'-6" | 19'-8" | 17'-7" | 15'-4" | 13'-0" | 16'-0" | 14'-0" | 11'-9" | 14'-10" | 13'-0" | 10'-11" | 14'-0" | 12'-2" | 10'-4" | 13'-3" | 11'-7" | 9'-9" | 12'-8" | 11'-1" | 9'-4" |
| | 16 | | 25'-10" | 20'-6" | 17'-11" | 16'-0" | 14'-0" | 11'-9" | 14'-6" | 12'-8" | 10'-8" | 13'-6" | 11'-9" | 9'-11" | 12'-8" | 11'-1" | 9'-4" | 12'-1" | 10'-6" | 8'-11" | 11'-6" | 10'-1" | 8'-6" |
| | 24 | | 22'-6" | 17'-11" | 15'-8" | 14'-0" | 12'-2" | 10'-4" | 12'-8" | 11'-1" | 9'-4" | 11'-9" | 10'-4" | 8'-8" | 10'-1" | 9'-8" | 8'-2" | 10'-6" | 9'-2" | 7'-9" | 10'-1" | 8'-10" | 7'-5" |
| 362S162-68 | 12 | 50 | 30'-5" | 24'-1" | 21'-1" | 18'-10" | 16'-5" | 13'-10" | 17'-1" | 14'-11" | 12'-7" | 15'-11" | 13'-10" | 11'-8" | 14'-11" | 13'-1" | 11'-0" | 14'-2" | 12'-5" | 10'-6" | 13'-7" | 11'-10" | 10'-0" |
| | 16 | | 27'-7" | 21'-11" | 19'-2" | 17'-1" | 14'-11" | 12'-7" | 15'-7" | 13'-7" | 11'-5" | 14'-5" | 12'-7" | 10'-8" | 13'-7" | 11'-10" | 10'-0" | 12'-11" | 11'-3" | 9'-6" | 12'-4" | 10'-9" | 9'-1" |
| | 24 | | 24'-1" | 19'-2" | 16'-9" | 14'-11" | 13'-1" | 11'-0" | 13'-7" | 11'-10" | 10'-0" | 12'-7" | 11'-0" | 9'-3" | 11'-10" | 10'-4" | 8'-9" | 11'-3" | 9'-10" | 8'-4" | 10'-9" | 9'-5" | 7'-11" |
| 362S162-97 | 12 | 50 | 33'-6" | 26'-7" | 23'-3" | 20'-9" | 18'-2" | 15'-4" | 18'-11" | 16'-6" | 13'-11" | 17'-6" | 15'-4" | 12'-11" | 16'-6" | 14'-5" | 12'-2" | 15'-8" | 13'-8" | 11'-7" | 15'-0" | 13'-1" | 11'-0" |
| | 16 | | 30'-5" | 24'-2" | 21'-1" | 18'-11" | 16'-6" | 13'-11" | 17'-2" | 15'-0" | 12'-8" | 15'-11" | 13'-11" | 11'-9" | 15'-0" | 13'-1" | 11'-0" | 14'-3" | 12'-5" | 10'-6" | 13'-7" | 11'-11" | 10'-0" |
| | 24 | | 26'-7" | 21'-1" | 18'-5" | 16'-6" | 14'-5" | 12'-2" | 15'-0" | 13'-1" | 11'-0" | 13'-11" | 12'-2" | 10'-3" | 13'-1" | 11'-5" | 9'-8" | 12'-5" | 10'-10" | 9'-2" | 11'-11" | 10'-5" | 8'-9" |
| 362S200-33 | 12 | 33 | 25'-8" | 20'-5" | 17'-10" | 15'-11" | 13'-11" | 11'-9" | 14'-1"e | 12'-8" | 10'-8" | 12'-7"e | 11'-9"e | 9'-11" | 11'-6"e | 11'-0"e | 9'-4"e | 10'-8"e | 10'-6"e | 8'-10"e | 10'-0"e | 10'-0"e | 8'-6"e |
| | 16 | | 23'-4" | 18'-6" | 16'-2" | 14'-1"e | 12'-8" | 10'-8" | 12'-2"e | 11'-6"e | 9'-8"e | 10'-11"e | 10'-8"e | 9'-0"e | 10'-0"e | 10'-0"e | 8'-6"e | 9'-3"e | 9'-3"e | 8'-0"e | 8'-8"e | 8'-8"e | 7'-8"e |
| | 24 | | 19'-11" | 16'-2" | 14'-2" | 11'-6"e | 11'-0"e | 9'-4"e | 10'-0"e | 10'-0"e | 8'-6"e | 8'-11"e | 8'-11"e | 7'-10"e | 8'-2"e | 8'-2"e | 7'-5"e | 7'-6"e | 7'-6"e | 7'-0"e | 7'-1"e | 7'-1"e | 6'-9"e |
| 362S200-43 | 12 | 33 | 28'-0" | 22'-3" | 19'-5" | 17'-4" | 15'-2" | 12'-9" | 15'-9" | 13'-9" | 11'-7" | 14'-8" | 12'-9" | 10'-9" | 13'-9" | 12'-0" | 10'-2" | 12'-10" | 11'-5" | 9'-8" | 12'-0" | 10'-11" | 9'-3" |
| | 16 | | 25'-5" | 20'-2" | 17'-8" | 15'-9" | 13'-9" | 11'-7" | 14'-4" | 12'-6" | 10'-7" | 13'-2" | 11'-7" | 9'-10" | 12'-0" | 10'-11" | 9'-3" | 11'-1"e | 10'-5" | 8'-9" | 10'-5"e | 9'-11"e | 8'-4" |
| | 24 | | 22'-3" | 17'-8" | 15'-5" | 13'-9" | 12'-0" | 10'-2" | 12'-0" | 10'-11" | 9'-3" | 10'-9"e | 10'-2" | 8'-7" | 9'-9"e | 9'-7"e | 8'-1" | 9'-1"e | 9'-1"e | 7'-8"e | 8'-6"e | 8'-6"e | 7'-4"e |
| 362S200-54 | 12 | 33 | 30'-0" | 23'-10" | 20'-10" | 18'-7" | 16'-3" | 13'-8" | 16'-11" | 14'-9" | 12'-5" | 15'-8" | 13'-8" | 11'-7" | 14'-9" | 12'-11" | 10'-11" | 14'-0" | 12'-3" | 10'-4" | 13'-5" | 11'-9" | 9'-11" |
| | 16 | | 27'-3" | 21'-8" | 18'-11" | 16'-11" | 14'-9" | 12'-5" | 15'-4" | 13'-5" | 11'-4" | 14'-3" | 12'-5" | 10'-6" | 13'-5" | 11'-9" | 9'-11" | 12'-9" | 11'-2" | 9'-5" | 12'-2" | 10'-8" | 9'-0" |
| | 24 | | 23'-10" | 18'-11" | 16'-6" | 14'-9" | 12'-11" | 10'-11" | 13'-5" | 11'-9" | 9'-11" | 12'-5" | 10'-11" | 9'-2" | 11'-7" | 10'-3" | 8'-8" | 10'-9" | 9'-9" | 8'-2" | 10'-1" | 9'-4" | 7'-10" |
| 362S200-54 | 12 | 50 | 30'-0" | 23'-10" | 20'-10" | 18'-7" | 16'-3" | 13'-8" | 16'-11" | 14'-9" | 12'-5" | 15'-8" | 13'-8" | 11'-7" | 14'-9" | 12'-11" | 10'-11" | 14'-0" | 12'-3" | 10'-4" | 13'-5" | 11'-9" | 9'-11" |
| | 16 | | 27'-3" | 21'-8" | 18'-11" | 16'-11" | 14'-9" | 12'-5" | 15'-4" | 13'-5" | 11'-4" | 14'-3" | 12'-5" | 10'-6" | 13'-5" | 11'-9" | 9'-11" | 12'-9" | 11'-2" | 9'-5" | 12'-2" | 10'-8" | 9'-0" |
| | 24 | | 23'-10" | 18'-11" | 16'-6" | 14'-9" | 12'-11" | 10'-11" | 13'-5" | 11'-9" | 9'-11" | 12'-5" | 10'-11" | 9'-2" | 11'-9" | 10'-3" | 8'-8" | 11'-2" | 9'-9" | 8'-2" | 10'-8" | 9'-4" | 7'-10" |
| 362S200-68 | 12 | 50 | 32'-2" | 25'-6" | 22'-3" | 19'-11" | 17'-5" | 14'-8" | 18'-1" | 15'-10" | 13'-4" | 16'-10" | 14'-8" | 12'-5" | 15'-10" | 13'-10" | 11'-8" | 15'-0" | 13'-1" | 11'-1" | 14'-4" | 12'-7" | 10'-7" |
| | 16 | | 29'-2" | 23'-2" | 20'-3" | 18'-1" | 15'-10" | 13'-4" | 16'-5" | 14'-4" | 12'-1" | 15'-3" | 13'-4" | 11'-3" | 14'-4" | 12'-7" | 10'-7" | 13'-8" | 11'-11" | 10'-1" | 13'-1" | 11'-5" | 9'-7" |
| | 24 | | 25'-6" | 20'-3" | 17'-8" | 15'-10" | 13'-10" | 11'-8" | 14'-4" | 12'-7" | 10'-7" | 13'-4" | 11'-8" | 9'-10" | 12'-7" | 11'-0" | 9'-3" | 11'-11" | 10'-5" | 8'-9" | 11'-5" | 10'-0" | 8'-5" |

See Curtain Wall Limiting Heights Table Notes

# Wall Height

| Stud Member | Spacing, in, oc | Fy, ksi | 5 psf | | | 15 psf | | | 20 psf | | | 25 psf | | | 30 psf | | | 35 psf | | | 40 psf | | |
|---|---|---|---|---|---|---|---|---|---|---|---|---|---|---|---|---|---|---|---|---|---|---|---|
| | | | L/120 | L/240 | L/360 | L/240 | L/360 | L/600 | L/240 | L/360 | L/600 | L/240 | L/360 | L/600 | L/240 | L/360 | L/600 | L/240 | L/360 | L/600 | L/240 | L/360 | L/600 |
| 362S200-97 | 12 | 50 | 35'-7" | 28'-3" | 24'-8" | 22'-0" | 19'-3" | 16'-3" | 20'-0" | 17'-6" | 14'-9" | 18'-7" | 16'-3" | 13'-8" | 17'-6" | 15'-3" | 12'-11" | 16'-7" | 14'-6" | 12'-3" | 15'-11" | 13'-11" | 11'-8" |
| | 16 | | 32'-4" | 25'-8" | 22'-5" | 20'-0" | 17'-6" | 14'-9" | 18'-2" | 15'-11" | 13'-5" | 16'-11" | 14'-9" | 12'-5" | 15'-11" | 13'-11" | 11'-8" | 15'-1" | 13'-2" | 11'-1" | 14'-5" | 12'-7" | 10'-8" |
| | 24 | | 28'-3" | 22'-5" | 19'-7" | 17'-6" | 15'-3" | 12'-11" | 15'-11" | 13'-11" | 11'-8" | 14'-9" | 12'-11" | 10'-10" | 13'-11" | 12'-2" | 10'-3" | 13'-2" | 11'-6" | 9'-9" | 12'-7" | 11'-0" | 9'-4" |
| 362S250-43 | 12 | 33 | 29'-6" | 23'-5" | 20'-6" | 18'-4" | 16'-0" | 13'-6" | 16'-7" | 14'-6" | 12'-3" | 15'-5" | 13'-6" | 11'-4" | 14'-2" | 12'-8" | 10'-8" | 13'-2" | 12'-1" | 10'-2" | 12'-4" | 11'-6" | 9'-9" |
| | 16 | | 26'-10" | 21'-3" | 18'-7" | 16'-7" | 14'-6" | 12'-3" | 15'-1" | 13'-2" | 11'-2" | 13'-6" | 12'-3" | 10'-4" | 12'-4" | 11'-6" | 9'-9" | 11'-5"e | 10'-11"e | 9'-3" | 10'-8"e | 10'-6"e | 8'-10" |
| | 24 | | 23'-5" | 18'-7" | 16'-3" | 14'-2" | 12'-8" | 10'-8" | 12'-4" | 11'-6" | 9'-9" | 11'-0"e | 10'-8"e | 9'-0" | 10'-0"e | 10'-0"e | 8'-6" | 9'-4"e | 9'-4"e | 8'-1"e | 8'-8"e | 8'-8"e | 7'-9"e |
| 362S250-54 | 12 | 33 | 31'-8" | 25'-2" | 21'-11" | 19'-7" | 17'-2" | 14'-6" | 17'-10" | 15'-7" | 13'-2" | 16'-7" | 14'-6" | 12'-2" | 15'-7" | 13'-7" | 11'-6" | 14'-10" | 12'-11" | 10'-11" | 13'-11" | 12'-4" | 10'-5" |
| | 16 | | 28'-9" | 22'-10" | 19'-11" | 17'-10" | 15'-7" | 13'-2" | 16'-2" | 14'-2" | 11'-11" | 15'-0" | 13'-2" | 11'-1" | 13'-11" | 12'-4" | 10'-5" | 12'-11" | 11'-9" | 9'-11" | 12'-1" | 11'-3" | 9'-6" |
| | 24 | | 25'-2" | 19'-11" | 17'-5" | 15'-7" | 13'-7" | 11'-6" | 13'-11" | 12'-4" | 10'-5" | 12'-6" | 11'-6" | 9'-8" | 11'-5" | 10'-10" | 9'-1" | 10'-7" | 10'-3" | 8'-8" | 9'-10" | 9'-10" | 8'-3" |
| 362S250-54 | 12 | 50 | 31'-7" | 25'-1" | 21'-11" | 19'-7" | 17'-1" | 14'-5" | 17'-10" | 15'-7" | 13'-1" | 16'-6" | 14'-5" | 12'-2" | 15'-7" | 13'-7" | 11'-5" | 14'-9" | 12'-11" | 10'-11" | 14'-2" | 12'-4" | 10'-5" |
| | 16 | | 28'-9" | 22'-10" | 19'-11" | 17'-10" | 15'-7" | 13'-1" | 16'-2" | 14'-2" | 11'-11" | 15'-0" | 13'-1" | 11'-1" | 14'-2" | 12'-4" | 10'-5" | 13'-5" | 11'-9" | 9'-11" | 12'-10" | 11'-3" | 9'-5" |
| | 24 | | 25'-1" | 19'-11" | 17'-5" | 15'-7" | 13'-7" | 11'-5" | 14'-2" | 12'-4" | 10'-5" | 13'-1" | 11'-5" | 9'-8" | 12'-4" | 10'-9" | 9'-1" | 11'-9" | 10'-3" | 8'-8" | 11'-3" | 9'-10" | 8'-3" |
| 362S250-68 | 12 | 50 | 33'-11" | 26'-11" | 23'-6" | 21'-0" | 18'-5" | 15'-6" | 19'-1" | 16'-8" | 14'-1" | 17'-9" | 15'-6" | 13'-1" | 16'-8" | 14'-7" | 12'-4" | 15'-10" | 13'-10" | 11'-8" | 15'-2" | 13'-3" | 11'-2" |
| | 16 | | 30'-10" | 24'-6" | 21'-5" | 19'-1" | 16'-8" | 14'-1" | 17'-4" | 15'-2" | 12'-10" | 16'-1" | 14'-1" | 11'-11" | 15'-2" | 13'-3" | 11'-2" | 14'-5" | 12'-7" | 10'-7" | 13'-9" | 12'-0" | 10'-2" |
| | 24 | | 26'-11" | 21'-5" | 18'-8" | 16'-8" | 14'-7" | 12'-4" | 15'-2" | 13'-3" | 11'-2" | 14'-1" | 12'-4" | 10'-5" | 13'-3" | 11'-7" | 9'-9" | 12'-7" | 11'-0" | 9'-3" | 12'-0" | 10'-6" | 8'-10" |
| 362S250-97 | 12 | 50 | 37'-7" | 29'-10" | 26'-1" | 23'-4" | 20'-4" | 17'-2" | 21'-2" | 18'-6" | 15'-7" | 19'-8" | 17'-2" | 14'-6" | 18'-6" | 16'-2" | 13'-8" | 17'-7" | 15'-4" | 12'-11" | 16'-10" | 14'-8" | 12'-5" |
| | 16 | | 34'-2" | 27'-1" | 23'-8" | 21'-2" | 18'-6" | 15'-7" | 19'-3" | 16'-10" | 14'-2" | 17'-10" | 15'-7" | 13'-2" | 16'-10" | 14'-8" | 12'-5" | 16'-0" | 13'-11" | 11'-9" | 15'-3" | 13'-4" | 11'-3" |
| | 24 | | 29'-10" | 23'-8" | 20'-8" | 18'-6" | 16'-2" | 13'-8" | 16'-10" | 14'-8" | 12'-5" | 15'-7" | 13'-8" | 11'-6" | 14'-8" | 12'-10" | 10'-10" | 13'-11" | 12'-2" | 10'-3" | 13'-4" | 11'-8" | 9'-10" |
| 362S300-54 | 12 | 33 | 33'-1" | 26'-3" | 22'-11" | 20'-6" | 17'-11" | 15'-1" | 18'-8" | 16'-3" | 13'-9" | 17'-4" | 15'-1" | 12'-9" | 16'-3" | 14'-3" | 12'-0" | 15'-3" | 13'-6" | 11'-5" | 14'-3" | 12'-11" | 10'-11" |
| | 16 | | 30'-1" | 23'-10" | 20'-10" | 18'-8" | 16'-3" | 13'-9" | 16'-11" | 14'-10" | 12'-6" | 15'-7" | 13'-9" | 11'-7" | 14'-3" | 12'-11" | 10'-11" | 13'-2" | 12'-3" | 10'-4" | 12'-4" | 11'-9" | 9'-11" |
| | 24 | | 26'-3" | 20'-10" | 18'-3" | 16'-3" | 14'-3" | 12'-0" | 14'-3" | 12'-11" | 10'-11" | 12'-9" | 12'-0" | 10'-1" | 11'-8" | 11'-3" | 9'-6" | 10'-9" | 10'-9" | 9'-1" | 10'-1" | 10'-1" | 8'-8" |
| 362S300-54 | 12 | 50 | 32'-6" | 25'-10" | 22'-7" | 20'-2" | 17'-7" | 14'-10" | 18'-4" | 16'-0" | 13'-6" | 17'-0" | 14'-10" | 12'-6" | 16'-0" | 14'-0" | 11'-9" | 15'-2" | 13'-3" | 11'-2" | 14'-6" | 12'-8" | 10'-8" |
| | 16 | | 29'-6" | 23'-5" | 20'-6" | 18'-4" | 16'-0" | 13'-6" | 16'-8" | 14'-6" | 12'-3" | 15'-5" | 13'-6" | 11'-5" | 14'-6" | 12'-8" | 10'-8" | 13'-10" | 12'-1" | 10'-2" | 13'-2" | 11'-6" | 9'-9" |
| | 24 | | 25'-10" | 20'-6" | 17'-11" | 16'-0" | 14'-0" | 11'-9" | 14'-6" | 12'-8" | 10'-8" | 13'-6" | 11'-9" | 9'-11" | 12'-8" | 11'-1" | 9'-4" | 12'-1" | 10'-6" | 8'-11" | 11'-6" | 10'-1" | 8'-6" |
| 362S300-68 | 12 | 50 | 35'-4" | 28'-1" | 24'-6" | 21'-11" | 19'-2" | 16'-2" | 19'-11" | 17'-5" | 14'-8" | 18'-6" | 16'-2" | 13'-7" | 17'-5" | 15'-2" | 12'-10" | 16'-6" | 14'-5" | 12'-2" | 15'-10" | 13'-10" | 11'-8" |
| | 16 | | 32'-1" | 25'-6" | 22'-3" | 19'-11" | 17'-5" | 14'-8" | 18'-1" | 15'-10" | 13'-4" | 16'-9" | 14'-8" | 12'-4" | 15'-10" | 13'-10" | 11'-8" | 15'-0" | 13'-1" | 11'-1" | 14'-4" | 12'-6" | 10'-7" |
| | 24 | | 28'-1" | 22'-3" | 19'-5" | 17'-5" | 15'-2" | 12'-10" | 15'-10" | 13'-10" | 11'-8" | 14'-8" | 12'-10" | 10'-10" | 13'-10" | 12'-1" | 10'-2" | 13'-1" | 11'-5" | 9'-8" | 12'-6" | 10'-11" | 9'-3" |
| 362S300-97 | 12 | 50 | 39'-4" | 31'-3" | 27'-3" | 24'-5" | 21'-4" | 18'-0" | 22'-2" | 19'-4" | 16'-4" | 20'-7" | 18'-0" | 15'-2" | 19'-4" | 16'-11" | 14'-3" | 18'-5" | 16'-1" | 13'-7" | 17'-7" | 15'-4" | 13'-0" |
| | 16 | | 35'-9" | 28'-5" | 24'-10" | 22'-2" | 19'-4" | 16'-4" | 20'-2" | 17'-7" | 14'-10" | 18'-8" | 16'-4" | 13'-9" | 17'-7" | 15'-4" | 13'-0" | 16'-9" | 14'-7" | 12'-4" | 16'-0" | 14'-0" | 11'-9" |
| | 24 | | 31'-3" | 24'-10" | 21'-8" | 19'-4" | 16'-11" | 14'-3" | 17'-7" | 15'-4" | 13'-0" | 16'-4" | 14'-3" | 12'-0" | 15'-4" | 13'-5" | 11'-4" | 14'-7" | 12'-9" | 10'-9" | 14'-0" | 12'-2" | 10'-3" |
| 400S137-33 | 12 | 33 | 25'-1" | 19'-11" | 17'-5" | 15'-4" | 13'-7" | 11'-6" | 13'-4"e | 12'-4"e | 10'-5" | 11'-11"e | 11'-6"e | 9'-8" | 10'-10"e | 10'-9"e | 9'-1"e | 10'-1"e | 10'-1"e | 8'-8"e | 9'-5"e | 9'-5"e | 8'-3"e |
| | 16 | | 22'-10" | 18'-1" | 15'-10" | 13'-4"e | 12'-4"e | 10'-5" | 11'-6"e | 11'-3"e | 9'-6"e | 10'-4"e | 10'-4"e | 8'-9"e | 9'-5"e | 9'-5"e | 8'-3"e | 8'-9"e | 8'-9"e | 7'-10"e | 8'-2"e | 8'-2"e | 7'-6"e |
| | 24 | | 18'-10" | 15'-10" | 13'-10" | 10'-10"e | 10'-9"e | 9'-1"e | 9'-5"e | 9'-5"e | 8'-3"e | 8'-5"e | 8'-5"e | 7'-8"e | 7'-8"e | 7'-8"e | 7'-3"e | 7'-1"e | 7'-1"e | 6'-10"e | 6'-8"e | 6'-8"e | 6'-7"e |
| 400S137-43 | 12 | 33 | 27'-4" | 21'-8" | 18'-11" | 16'-11" | 14'-9" | 12'-6" | 15'-5" | 13'-5" | 11'-4" | 14'-0" | 12'-6" | 10'-6" | 12'-9" | 11'-9" | 9'-11" | 11'-10" | 11'-2" | 9'-5" | 11'-1" | 10'-8" | 9'-0" |
| | 16 | | 24'-10" | 19'-8" | 17'-2" | 15'-5" | 13'-5" | 11'-4" | 13'-6" | 12'-2" | 10'-4" | 12'-1" | 11'-4" | 9'-7" | 11'-1" | 10'-8" | 9'-0" | 10'-3" | 10'-2" | 8'-6" | 9'-7"e | 9'-7"e | 8'-2" |
| | 24 | | 21'-8" | 17'-2" | 15'-0" | 12'-9" | 11'-9" | 9'-11" | 11'-1" | 10'-8" | 9'-0" | 9'-11" | 9'-11" | 8'-4" | 9'-0"e | 9'-0"e | 7'-10" | 8'-4"e | 8'-4"e | 7'-6"e | 7'-10"e | 7'-10"e | 7'-2"e |
| 400S137-54 | 12 | 33 | 29'-3" | 23'-3" | 20'-3" | 18'-1" | 15'-10" | 13'-4" | 16'-6" | 14'-5" | 12'-2" | 15'-3" | 13'-4" | 11'-3" | 14'-4" | 12'-7" | 10'-7" | 13'-3" | 11'-11" | 10'-1" | 12'-5" | 11'-5" | 9'-8" |
| | 16 | | 26'-7" | 21'-1" | 18'-5" | 16'-6" | 14'-5" | 12'-2" | 15'-0" | 13'-1" | 11'-0" | 13'-7" | 12'-2" | 10'-3" | 12'-5" | 11'-5" | 9'-8" | 11'-6" | 10'-10" | 9'-2" | 10'-9" | 10'-4" | 8'-9" |
| | 24 | | 23'-3" | 18'-5" | 16'-1" | 14'-4" | 12'-7" | 10'-7" | 12'-5" | 11'-5" | 9'-8" | 11'-1" | 10'-7" | 8'-11" | 10'-1" | 10'-0" | 8'-5" | 9'-4" | 9'-4" | 8'-0" | 8'-9" | 8'-9" | 7'-8" |
| 400S137-54 | 12 | 50 | 29'-3" | 23'-3" | 20'-3" | 18'-1" | 15'-10" | 13'-4" | 16'-6" | 14'-5" | 12'-2" | 15'-3" | 13'-4" | 11'-3" | 14'-5" | 12'-7" | 10'-7" | 13'-8" | 11'-11" | 10'-1" | 13'-1" | 11'-5" | 9'-8" |
| | 16 | | 26'-7" | 21'-1" | 18'-5" | 16'-6" | 14'-5" | 12'-2" | 15'-0" | 13'-1" | 11'-0" | 13'-11" | 12'-2" | 10'-3" | 13'-1" | 11'-5" | 9'-8" | 12'-5" | 10'-10" | 9'-2" | 11'-10" | 10'-4" | 8'-9" |
| | 24 | | 23'-3" | 18'-5" | 16'-1" | 14'-5" | 12'-7" | 10'-7" | 13'-1" | 11'-5" | 9'-8" | 12'-2" | 10'-7" | 8'-11" | 11'-5" | 10'-0" | 8'-5" | 10'-10" | 9'-6" | 8'-0" | 10'-4" | 9'-1" | 7'-8" |
| 400S137-68 | 12 | 50 | 31'-3" | 24'-10" | 21'-8" | 19'-5" | 16'-11" | 14'-3" | 17'-7" | 15'-5" | 13'-0" | 16'-4" | 14'-3" | 12'-1" | 15'-5" | 13'-5" | 11'-4" | 14'-7" | 12'-9" | 10'-9" | 14'-0" | 12'-2" | 10'-4" |
| | 16 | | 28'-5" | 22'-7" | 19'-8" | 17'-7" | 15'-5" | 13'-0" | 16'-0" | 14'-0" | 11'-9" | 14'-10" | 13'-0" | 10'-11" | 14'-0" | 12'-2" | 10'-4" | 13'-3" | 11'-7" | 9'-9" | 12'-8" | 11'-1" | 9'-4" |
| | 24 | | 24'-10" | 19'-8" | 17'-2" | 15'-5" | 13'-5" | 11'-4" | 14'-0" | 12'-2" | 10'-4" | 13'-0" | 11'-4" | 9'-7" | 12'-2" | 10'-8" | 9'-0" | 11'-7" | 10'-2" | 8'-7" | 11'-1" | 9'-8" | 8'-2" |
| 400S162-33 | 12 | 33 | 26'-3" | 20'-10" | 18'-3" | 16'-3" | 14'-3" | 12'-0" | 14'-3"e | 12'-11"e | 10'-11" | 12'-9"e | 12'-0"e | 10'-1"e | 11'-8"e | 11'-4"e | 9'-6"e | 10'-9"e | 10'-9"e | 9'-1"e | 10'-1"e | 10'-1"e | 8'-8"e |
| | 16 | | 23'-11" | 18'-11" | 16'-7" | 14'-3"e | 12'-11"e | 10'-11" | 12'-4"e | 11'-9"e | 9'-11"e | 11'-1"e | 10'-11"e | 9'-2"e | 10'-1"e | 10'-1"e | 8'-8"e | 9'-4"e | 9'-4"e | 8'-3"e | 8'-9"e | 8'-9"e | 7'-10"e |
| | 24 | | 20'-2" | 16'-7" | 14'-6" | 11'-8"e | 11'-4"e | 9'-6"e | 10'-1"e | 10'-1"e | 8'-8"e | 9'-0"e | 9'-0"e | 8'-0"e | 8'-3"e | 8'-3"e | 7'-7"e | 7'-8"e | 7'-8"e | 7'-2"e | 7'-2"e | 7'-2"e | 6'-10"e |
| 400S162-43 | 12 | 33 | 28'-7" | 22'-8" | 19'-10" | 17'-9" | 15'-6" | 13'-1" | 16'-1" | 14'-1" | 11'-10" | 14'-11" | 13'-1" | 11'-0" | 13'-9" | 12'-3" | 10'-4" | 12'-8" | 11'-8" | 9'-10" | 11'-11" | 11'-2" | 9'-5" |
| | 16 | | 26'-0" | 20'-7" | 18'-0" | 16'-1" | 14'-1" | 11'-10" | 14'-7" | 12'-9" | 10'-9" | 13'-0" | 11'-10" | 10'-0" | 11'-11" | 11'-2" | 9'-5" | 11'-0"e | 10'-7" | 8'-11" | 10'-3"e | 10'-2"e | 8'-7" |
| | 24 | | 22'-8" | 18'-0" | 15'-9" | 13'-9" | 12'-3" | 10'-4" | 11'-11" | 11'-2" | 9'-5" | 10'-8"e | 10'-4"e | 8'-9" | 9'-8"e | 9'-8"e | 8'-3" | 9'-0"e | 9'-0"e | 7'-10"e | 8'-5"e | 8'-5"e | 7'-6"e |
| 400S162-54 | 12 | 33 | 30'-8" | 24'-4" | 21'-3" | 19'-0" | 16'-7" | 14'-0" | 17'-3" | 15'-1" | 12'-9" | 16'-0" | 14'-0" | 11'-10" | 15'-1" | 13'-2" | 11'-1" | 14'-3" | 12'-6" | 10'-7" | 13'-4" | 12'-0" | 10'-1" |
| | 16 | | 27'-10" | 22'-1" | 19'-4" | 17'-3" | 15'-1" | 12'-9" | 15'-8" | 13'-8" | 11'-7" | 14'-7" | 12'-9" | 10'-9" | 13'-4" | 12'-0" | 10'-1" | 12'-4" | 11'-4" | 9'-7" | 11'-6" | 10'-10" | 9'-2" |
| | 24 | | 24'-4" | 19'-4" | 16'-10" | 15'-1" | 13'-2" | 11'-1" | 13'-4" | 12'-0" | 10'-1" | 11'-11" | 11'-1" | 9'-4" | 10'-10" | 10'-5" | 8'-10" | 10'-1" | 9'-11" | 8'-5" | 9'-5" | 9'-5" | 8'-0" |
| 400S162-54 | 12 | 50 | 30'-8" | 24'-4" | 21'-3" | 19'-0" | 16'-7" | 14'-0" | 17'-3" | 15'-1" | 12'-9" | 16'-0" | 14'-0" | 11'-10" | 15'-1" | 13'-2" | 11'-1" | 14'-4" | 12'-6" | 10'-7" | 13'-8" | 12'-0" | 10'-1" |
| | 16 | | 27'-10" | 22'-1" | 19'-4" | 17'-3" | 15'-1" | 12'-9" | 15'-8" | 13'-8" | 11'-7" | 14'-7" | 12'-9" | 10'-9" | 13'-8" | 12'-0" | 10'-1" | 13'-0" | 11'-4" | 9'-7" | 12'-5" | 10'-10" | 9'-2" |
| | 24 | | 24'-4" | 19'-4" | 16'-10" | 15'-1" | 13'-2" | 11'-1" | 13'-8" | 12'-0" | 10'-1" | 12'-9" | 11'-1" | 9'-4" | 12'-0" | 10'-5" | 8'-10" | 11'-4" | 9'-11" | 8'-5" | 10'-10" | 9'-6" | 8'-0" |

See Curtain Wall Limiting Heights Table Notes

# Wall Height

| Stud Member | Spacing, in, oc | Fy, ksi | 5 psf | | | 15 psf | | | 20 psf | | | 25 psf | | | 30 psf | | | 35 psf | | | 40 psf | | |
|---|---|---|---|---|---|---|---|---|---|---|---|---|---|---|---|---|---|---|---|---|---|---|---|
| | | | L/120 | L/240 | L/360 | L/240 | L/360 | L/600 | L/240 | L/360 | L/600 | L/240 | L/360 | L/600 | L/240 | L/360 | L/600 | L/240 | L/360 | L/600 | L/240 | L/360 | L/600 |
| 400S162-68 | 12 | 50 | 32'-10" | 26'-0" | 22'-9" | 20'-4" | 17'-9" | 15'-0" | 18'-6" | 16'-2" | 13'-7" | 17'-2" | 15'-0" | 12'-8" | 16'-2" | 14'-1" | 11'-11" | 15'-4" | 13'-5" | 11'-4" | 14'-8" | 12'-10" | 10'-10" |
| | 16 | | 29'-10" | 23'-8" | 20'-8" | 18'-6" | 16'-2" | 13'-7" | 16'-9" | 14'-8" | 12'-4" | 15'-7" | 13'-7" | 11'-6" | 14'-8" | 12'-10" | 10'-10" | 13'-11" | 12'-2" | 10'-3" | 13'-4" | 11'-8" | 9'-10" |
| | 24 | | 26'-0" | 20'-8" | 18'-1" | 16'-2" | 14'-1" | 11'-11" | 14'-8" | 12'-10" | 10'-10" | 13'-7" | 11'-11" | 10'-0" | 12'-10" | 11'-2" | 9'-5" | 12'-2" | 10'-8" | 9'-0" | 11'-8" | 10'-2" | 8'-7" |
| 400S162-97 | 12 | 50 | 36'-3" | 28'-9" | 25'-2" | 22'-6" | 19'-7" | 16'-7" | 20'-5" | 17'-10" | 15'-0" | 18'-11" | 16'-7" | 13'-11" | 17'-10" | 15'-7" | 13'-2" | 16'-11" | 14'-10" | 12'-6" | 16'-2" | 14'-2" | 11'-11" |
| | 16 | | 32'-11" | 26'-2" | 22'-10" | 20'-5" | 17'-10" | 15'-0" | 18'-6" | 16'-2" | 13'-8" | 17'-3" | 15'-0" | 12'-8" | 16'-2" | 14'-2" | 11'-11" | 15'-5" | 13'-5" | 11'-4" | 14'-9" | 12'-10" | 10'-10" |
| | 24 | | 28'-9" | 22'-10" | 19'-11" | 17'-10" | 15'-7" | 13'-2" | 16'-2" | 14'-2" | 11'-11" | 15'-0" | 13'-2" | 11'-1" | 14'-2" | 12'-4" | 10'-5" | 13'-5" | 11'-9" | 9'-11" | 12'-10" | 11'-3" | 9'-6" |
| 400S200-33 | 12 | 33 | 27'-8" | 22'-0" | 19'-2" | 17'-2"e | 15'-0" | 12'-8" | 14'-11"e | 13'-8"e | 11'-6" | 13'-4"e | 12'-8"e | 10'-8"e | 12'-2"e | 11'-11"e | 10'-0"e | 11'-3"e | 11'-3"e | 9'-6"e | 10'-7"e | 10'-7"e | 9'-1"e |
| | 16 | | 25'-2" | 20'-0" | 17'-5" | 14'-11"e | 13'-8"e | 11'-6" | 12'-11"e | 12'-5"e | 10'-5"e | 11'-7"e | 11'-6"e | 9'-8"e | 10'-7"e | 10'-7"e | 9'-1"e | 9'-9"e | 9'-9"e | 8'-8"e | 9'-2"e | 9'-2"e | 8'-3"e |
| | 24 | | 21'-1" | 17'-5" | 15'-3" | 12'-2"e | 11'-11"e | 10'-0"e | 10'-7"e | 10'-7"e | 9'-1"e | 9'-5"e | 9'-5"e | 8'-6"e | 8'-7"e | 8'-7"e | 8'-0"e | 8'-0"e | 8'-0"e | 7'-7"e | 7'-6"e | 7'-6"e | 7'-3"e |
| 400S200-43 | 12 | 33 | 30'-2" | 23'-11" | 20'-11" | 18'-8" | 16'-4" | 13'-9" | 17'-0" | 14'-10" | 12'-6" | 15'-9" | 13'-9" | 11'-7" | 14'-8" | 13'-0" | 10'-11" | 13'-7" | 12'-4" | 10'-5" | 12'-9"e | 11'-9" | 9'-11" |
| | 16 | | 27'-5" | 21'-9" | 19'-0" | 17'-0" | 14'-10" | 12'-6" | 15'-5" | 13'-6" | 11'-4" | 13'-11" | 12'-6" | 10'-7" | 12'-9"e | 11'-9" | 9'-11" | 11'-9"e | 11'-2"e | 9'-5" | 11'-0"e | 10'-8"e | 9'-0" |
| | 24 | | 23'-11" | 19'-0" | 16'-7" | 14'-8" | 13'-0" | 10'-11" | 12'-9"e | 11'-9" | 9'-11" | 11'-5"e | 10'-11"e | 9'-3" | 10'-5"e | 10'-4"e | 8'-8"e | 9'-7"e | 9'-7"e | 8'-3"e | 9'-0"e | 9'-0"e | 7'-11"e |
| 400S200-54 | 12 | 33 | 32'-4" | 25'-8" | 22'-5" | 20'-1" | 17'-6" | 14'-9" | 18'-3" | 15'-11" | 13'-5" | 16'-11" | 14'-9" | 12'-6" | 15'-11" | 13'-11" | 11'-9" | 15'-1" | 13'-3" | 11'-2" | 14'-5" | 12'-8" | 10'-8" |
| | 16 | | 29'-5" | 23'-4" | 20'-5" | 18'-3" | 15'-11" | 13'-5" | 16'-7" | 14'-6" | 12'-2" | 15'-4" | 13'-5" | 11'-4" | 14'-5" | 12'-8" | 10'-8" | 13'-5" | 12'-0" | 10'-1" | 12'-6" | 11'-6" | 9'-8" |
| | 24 | | 25'-8" | 20'-5" | 17'-10" | 15'-11" | 13'-11" | 11'-9" | 14'-5" | 12'-8" | 10'-8" | 12'-11" | 11'-9" | 9'-11" | 11'-10" | 11'-0" | 9'-4" | 10'-11" | 10'-6" | 8'-10" | 10'-3" | 10'-0" | 8'-5" |
| 400S200-54 | 12 | 50 | 32'-4" | 25'-8" | 22'-5" | 20'-1" | 17'-6" | 14'-9" | 18'-3" | 15'-11" | 13'-5" | 16'-11" | 14'-9" | 12'-6" | 15'-11" | 13'-11" | 11'-9" | 15'-1" | 13'-3" | 11'-2" | 14'-6" | 12'-8" | 10'-8" |
| | 16 | | 29'-5" | 23'-4" | 20'-5" | 18'-3" | 15'-11" | 13'-5" | 16'-7" | 14'-6" | 12'-2" | 15'-4" | 13'-5" | 11'-4" | 14'-6" | 12'-8" | 10'-8" | 13'-9" | 12'-0" | 10'-1" | 13'-2" | 11'-6" | 9'-8" |
| | 24 | | 25'-8" | 20'-5" | 17'-10" | 15'-11" | 13'-11" | 11'-9" | 14'-6" | 12'-8" | 10'-8" | 13'-5" | 11'-9" | 9'-11" | 12'-8" | 11'-0" | 9'-4" | 12'-0" | 10'-6" | 8'-10" | 11'-6" | 10'-0" | 8'-5" |
| 400S200-68 | 12 | 50 | 34'-8" | 27'-6" | 24'-1" | 21'-6" | 18'-9" | 15'-10" | 19'-6" | 17'-1" | 14'-5" | 18'-2" | 15'-10" | 13'-4" | 17'-1" | 14'-11" | 12'-7" | 16'-2" | 14'-2" | 11'-11" | 15'-6" | 13'-6" | 11'-5" |
| | 16 | | 31'-6" | 25'-0" | 21'-10" | 19'-6" | 17'-1" | 14'-5" | 17'-9" | 15'-6" | 13'-1" | 16'-6" | 14'-5" | 12'-2" | 15'-6" | 13'-6" | 11'-5" | 14'-9" | 12'-10" | 10'-10" | 14'-1" | 12'-4" | 10'-4" |
| | 24 | | 27'-6" | 21'-10" | 19'-1" | 17'-1" | 14'-11" | 12'-7" | 15'-6" | 13'-6" | 11'-5" | 14'-5" | 12'-7" | 10'-7" | 13'-6" | 11'-10" | 10'-0" | 12'-10" | 11'-3" | 9'-6" | 12'-4" | 10'-9" | 9'-1" |
| 400S200-97 | 12 | 50 | 38'-5" | 30'-6" | 26'-7" | 23'-9" | 20'-9" | 17'-6" | 21'-7" | 18'-11" | 15'-11" | 20'-1" | 17'-6" | 14'-9" | 18'-11" | 16'-6" | 13'-11" | 17'-11" | 15'-8" | 13'-3" | 17'-2" | 15'-0" | 12'-8" |
| | 16 | | 34'-11" | 27'-8" | 24'-2" | 21'-7" | 18'-11" | 15'-11" | 19'-8" | 17'-2" | 14'-6" | 18'-3" | 15'-11" | 13'-5" | 17'-2" | 15'-0" | 12'-8" | 16'-4" | 14'-3" | 12'-0" | 15'-7" | 13'-7" | 11'-6" |
| | 24 | | 30'-6" | 24'-2" | 21'-1" | 18'-11" | 16'-6" | 13'-11" | 17'-2" | 15'-0" | 12'-8" | 15'-11" | 13'-11" | 11'-9" | 15'-0" | 13'-1" | 11'-1" | 14'-3" | 12'-5" | 10'-6" | 13'-7" | 11'-11" | 10'-0" |
| 400S250-43 | 12 | 33 | 31'-9" | 25'-3" | 22'-0" | 19'-8" | 17'-2" | 14'-6" | 17'-11" | 15'-8" | 13'-2" | 16'-6" | 14'-6" | 12'-3" | 15'-1" | 13'-8" | 11'-6" | 13'-11" | 13'-0" | 10'-11" | 13'-0"e | 12'-5"e | 10'-6" |
| | 16 | | 28'-10" | 22'-11" | 20'-0" | 17'-11" | 15'-8" | 13'-2" | 16'-0" | 14'-2" | 12'-0" | 14'-3" | 13'-2" | 11'-1" | 13'-0"e | 12'-5"e | 10'-6" | 12'-1"e | 11'-9"e | 9'-11" | 11'-3"e | 11'-3"e | 9'-6"e |
| | 24 | | 25'-3" | 20'-0" | 17'-6" | 15'-1" | 13'-8" | 11'-6" | 13'-0"e | 12'-5"e | 10'-6" | 11'-8"e | 11'-6"e | 9'-9" | 10'-8"e | 10'-8"e | 9'-2"e | 9'-10"e | 9'-10"e | 8'-8"e | 9'-3"e | 9'-3"e | 8'-4"e |
| 400S250-54 | 12 | 33 | 34'-1" | 27'-1" | 23'-8" | 21'-2" | 18'-6" | 15'-7" | 19'-2" | 16'-9" | 14'-2" | 17'-10" | 15'-7" | 13'-2" | 16'-9" | 14'-8" | 12'-4" | 15'-10" | 13'-11" | 11'-9" | 14'-10" | 13'-4" | 11'-3" |
| | 16 | | 31'-0" | 24'-7" | 21'-6" | 19'-2" | 16'-9" | 14'-2" | 17'-5" | 15'-3" | 12'-10" | 16'-2" | 14'-2" | 11'-11" | 14'-10" | 13'-4" | 11'-3" | 13'-9" | 12'-8" | 10'-8" | 12'-10" | 12'-1" | 10'-2" |
| | 24 | | 27'-1" | 21'-6" | 18'-9" | 16'-9" | 14'-8" | 12'-4" | 14'-10" | 13'-4" | 11'-3" | 13'-3" | 12'-4" | 10'-5" | 12'-1" | 11'-8" | 9'-10" | 11'-3" | 11'-1" | 9'-4" | 10'-6"e | 10'-6"e | 8'-11" |
| 400S250-54 | 12 | 50 | 34'-1" | 27'-0" | 23'-7" | 21'-1" | 18'-5" | 15'-7" | 19'-2" | 16'-9" | 14'-1" | 17'-10" | 15'-7" | 13'-1" | 16'-9" | 14'-8" | 12'-4" | 15'-11" | 13'-11" | 11'-9" | 15'-3" | 13'-4" | 11'-3" |
| | 16 | | 30'-11" | 24'-7" | 21'-5" | 19'-2" | 16'-9" | 14'-1" | 17'-5" | 15'-3" | 12'-10" | 16'-2" | 14'-1" | 11'-11" | 15'-3" | 13'-4" | 11'-3" | 14'-5" | 12'-8" | 10'-8" | 13'-10" | 12'-1" | 10'-2" |
| | 24 | | 27'-0" | 21'-5" | 18'-9" | 16'-9" | 14'-8" | 12'-4" | 15'-3" | 13'-4" | 11'-3" | 14'-1" | 12'-4" | 10'-5" | 13'-4" | 11'-7" | 9'-10" | 12'-8" | 11'-0" | 9'-4" | 12'-1" | 10'-7" | 8'-11" |
| 400S250-68 | 12 | 50 | 36'-7" | 29'-0" | 25'-4" | 22'-8" | 19'-10" | 16'-8" | 20'-7" | 18'-0" | 15'-2" | 19'-1" | 16'-8" | 14'-1" | 18'-0" | 15'-9" | 13'-3" | 17'-1" | 14'-11" | 12'-7" | 16'-4" | 14'-3" | 12'-1" |
| | 16 | | 33'-3" | 26'-4" | 23'-0" | 20'-7" | 18'-0" | 15'-2" | 18'-9" | 16'-4" | 13'-9" | 17'-4" | 15'-2" | 12'-10" | 16'-4" | 14'-3" | 12'-1" | 15'-6" | 13'-7" | 11'-5" | 14'-10" | 13'-0" | 10'-11" |
| | 24 | | 29'-0" | 23'-0" | 20'-2" | 18'-0" | 15'-9" | 13'-3" | 16'-4" | 14'-3" | 12'-1" | 15'-2" | 13'-3" | 11'-2" | 14'-3" | 12'-6" | 10'-6" | 13'-7" | 11'-10" | 10'-0" | 13'-0" | 11'-4" | 9'-7" |
| 400S250-97 | 12 | 50 | 40'-7" | 32'-2" | 28'-1" | 25'-2"e | 21'-11"e | 18'-6"e | 22'-10"e | 19'-11"e | 16'-10"e | 21'-2"e | 18'-6"e | 15'-7"e | 19'-11"e | 17'-5"e | 14'-8"e | 18'-11"e | 16'-7"e | 14'-0"e | 18'-2"e | 15'-10"e | 13'-4"e |
| | 16 | | 36'-10"e | 29'-3" | 25'-7" | 22'-10"e | 19'-11"e | 16'-10"e | 20'-9"e | 18'-2"e | 15'-3"e | 19'-3"e | 16'-10"e | 14'-2"e | 18'-2"e | 15'-10"e | 13'-4"e | 17'-3"e | 15'-0"e | 12'-8"e | 16'-6"e | 14'-5"e | 12'-2"e |
| | 24 | | 32'-2"e | 25'-7"e | 22'-4" | 19'-11"e | 17'-5"e | 14'-8"e | 18'-2"e | 15'-10"e | 13'-4"e | 16'-10"e | 14'-8"e | 12'-5"e | 15'-10"e | 13'-10"e | 11'-8"e | 15'-0"e | 13'-2"e | 11'-1"e | 14'-5"e | 12'-7"e | 10'-7"e |
| 400S300-54 | 12 | 33 | 35'-7" | 28'-3" | 24'-8" | 22'-1" | 19'-3" | 16'-3" | 20'-1" | 17'-6" | 14'-9" | 18'-7" | 16'-3" | 13'-9" | 17'-6" | 15'-4" | 12'-11" | 16'-2" | 14'-6" | 12'-3" | 15'-2" | 13'-11" | 11'-9" |
| | 16 | | 32'-4" | 25'-8" | 22'-5" | 20'-1" | 17'-6" | 14'-9" | 18'-3" | 15'-11" | 13'-5" | 16'-7" | 14'-9" | 12'-6" | 15'-2" | 13'-11" | 11'-9" | 14'-0" | 13'-3" | 11'-2" | 13'-1" | 12'-8" | 10'-8" |
| | 24 | | 28'-3" | 22'-5" | 19'-7" | 17'-6" | 15'-4" | 12'-11" | 15'-2" | 13'-11" | 11'-9" | 13'-6" | 12'-11" | 10'-11" | 12'-4" | 12'-2" | 10'-3" | 11'-5" | 11'-5" | 9'-9" | 10'-8"e | 10'-8"e | 9'-4" |
| 400S300-54 | 12 | 50 | 35'-0" | 27'-9" | 24'-3" | 21'-8" | 18'-11" | 16'-0" | 19'-8" | 17'-3" | 14'-6" | 18'-3" | 16'-0" | 13'-6" | 17'-3" | 15'-0" | 12'-8" | 16'-4" | 14'-3" | 12'-1" | 15'-8" | 13'-8" | 11'-6" |
| | 16 | | 31'-9" | 25'-3" | 22'-1" | 19'-8" | 17'-3" | 14'-6" | 17'-11" | 15'-8" | 13'-2" | 16'-7" | 14'-6" | 12'-3" | 15'-8" | 13'-8" | 11'-6" | 14'-10" | 13'-0" | 10'-11" | 14'-3" | 12'-5" | 10'-6" |
| | 24 | | 27'-9" | 22'-1" | 19'-3" | 17'-3" | 15'-0" | 12'-8" | 15'-8" | 13'-8" | 11'-6" | 14'-6" | 12'-8" | 10'-8" | 13'-8" | 11'-11" | 10'-1" | 13'-0" | 11'-4" | 9'-7" | 12'-4" | 10'-10" | 9'-2" |
| 400S300-68 | 12 | 50 | 38'-0" | 30'-2" | 26'-4" | 23'-7" | 20'-7" | 17'-4" | 21'-5" | 18'-9" | 15'-9" | 19'-11" | 17'-4" | 14'-8" | 18'-9" | 16'-4" | 13'-9" | 17'-9" | 15'-6" | 13'-1" | 17'-0" | 14'-10" | 12'-6" |
| | 16 | | 34'-7" | 27'-5" | 24'-0" | 21'-5" | 18'-9" | 15'-9" | 19'-6" | 17'-0" | 14'-4" | 18'-1" | 15'-9" | 13'-4" | 17'-0" | 14'-10" | 12'-6" | 16'-2" | 14'-1" | 11'-11" | 15'-5" | 13'-6" | 11'-5" |
| | 24 | | 30'-2" | 24'-0" | 20'-11" | 18'-9" | 16'-4" | 13'-9" | 17'-0" | 14'-10" | 12'-6" | 15'-9" | 13'-9" | 11'-8" | 14'-10" | 13'-0" | 10'-11" | 14'-1" | 12'-4" | 10'-5" | 13'-6" | 11'-9" | 9'-11" |
| 400S300-97 | 12 | 50 | 42'-5" | 33'-8" | 29'-5" | 26'-3" | 22'-11" | 19'-4" | 23'-10" | 20'-10" | 17'-7" | 22'-2" | 19'-4" | 16'-4" | 20'-10" | 18'-3" | 15'-4" | 19'-10" | 17'-4" | 14'-7" | 18'-11" | 16'-7" | 13'-11" |
| | 16 | | 38'-6" | 30'-7" | 26'-8" | 23'-10" | 20'-10" | 17'-7" | 21'-8" | 18'-11" | 16'-0" | 20'-2" | 17'-7" | 14'-10" | 18'-11" | 16'-7" | 13'-11" | 18'-0" | 15'-9" | 13'-3" | 17'-3" | 15'-0" | 12'-8" |
| | 24 | | 33'-8" | 26'-8" | 23'-4" | 20'-10" | 18'-3" | 15'-4" | 18'-11" | 16'-7" | 13'-11" | 17'-7" | 15'-4" | 12'-11" | 16'-7" | 14'-5" | 12'-2" | 15'-9" | 13'-9" | 11'-7" | 15'-0" | 13'-2" | 11'-1" |
| 550S162-33 | 12 | 33 | 33'-8" | 26'-9" | 23'-4" | 20'-11"e | 18'-3"e | 15'-5"e | 18'-3"e | 16'-7"e | 14'-0"e | 16'-4"e | 15'-5"e | 13'-0"e | 14'-11"e | 14'-6"e | 12'-3"e | 13'-10"e | 13'-9"e | 11'-7"e | 12'-11"e | 12'-11"e | 11'-1"e |
| | 16 | | 30'-7" | 24'-4" | 21'-3" | 18'-3"e | 16'-7"e | 14'-0"e | 15'-10"e | 15'-1"e | 12'-8"e | 14'-2"e | 14'-0"e | 11'-9"e | 12'-11"e | 12'-11"e | 11'-1"e | 12'-0"e | 12'-0"e | 10'-6"e | 11'-2"e | 11'-2"e | 10'-1"e |
| | 24 | | 25'-10"e | 21'-3"e | 18'-7" | 14'-11"e | 14'-6"e | 12'-3"e | 12'-11"e | 12'-11"e | 11'-1"e | 11'-7"e | 11'-7"e | 10'-4"e | 10'-7"e | 10'-7"e | 9'-8"e | 9'-9"e | 9'-9"e | 9'-2"e | 9'-2"e | 9'-2"e | 8'-10"e |
| 550S162-43 | 12 | 33 | 36'-8" | 29'-1" | 25'-5" | 22'-9" | 19'-10" | 16'-9" | 20'-8" | 18'-1" | 15'-3" | 19'-2"e | 16'-9" | 14'-2" | 17'-11"e | 15'-9"e | 13'-4" | 16'-7"e | 15'-0"e | 12'-8" | 15'-6"e | 14'-4"e | 12'-1"e |
| | 16 | | 33'-4" | 26'-5" | 23'-1" | 20'-8" | 18'-1" | 15'-3" | 18'-9"e | 16'-5" | 13'-10" | 17'-0"e | 15'-3"e | 12'-10" | 15'-6"e | 14'-4"e | 12'-1"e | 14'-4"e | 13'-7"e | 11'-6"e | 13'-5"e | 13'-0"e | 11'-0"e |
| | 24 | | 29'-1" | 23'-1" | 20'-2" | 17'-11"e | 15'-9"e | 13'-4" | 15'-6"e | 14'-4"e | 12'-1"e | 13'-11"e | 13'-4"e | 11'-3"e | 12'-8"e | 12'-6"e | 10'-7"e | 11'-9"e | 11'-9"e | 10'-0"e | 11'-0"e | 11'-0"e | 9'-7"e |

See Curtain Wall Limiting Heights Table Notes

# Wall Height

| Stud Member | Spacing, in, oc | Fy, ksi | 5 psf | | | 15 psf | | | 20 psf | | | 25 psf | | | 30 psf | | | 35 psf | | | 40 psf | | |
|---|---|---|---|---|---|---|---|---|---|---|---|---|---|---|---|---|---|---|---|---|---|---|---|
| | | | L/120 | L/240 | L/360 | L/240 | L/360 | L/600 | L/240 | L/360 | L/600 | L/240 | L/360 | L/600 | L/240 | L/360 | L/600 | L/240 | L/360 | L/600 | L/240 | L/360 | L/600 |
| 550S162-54 | 12 | 33 | 39'-4" | 31'-3" | 27'-3" | 24'-5" | 21'-4" | 18'-0" | 22'-2" | 19'-4" | 16'-4" | 20'-7" | 18'-0" | 15'-2" | 19'-4" | 16'-11" | 14'-3" | 18'-5" | 16'-1" | 13'-7" | 17'-7" | 15'-4" | 13'-0" |
| | 16 | | 35'-9" | 28'-5" | 24'-10" | 22'-2" | 19'-4" | 16'-4" | 20'-2" | 17'-7" | 14'-10" | 18'-8" | 16'-4" | 13'-9" | 17'-7" | 15'-4" | 13'-0" | 16'-4"e | 14'-7" | 12'-4" | 15'-3"e | 14'-0" | 11'-9" |
| | 24 | | 31'-3" | 24'-10" | 21'-8" | 19'-4" | 16'-11" | 14'-3" | 17'-7" | 15'-4" | 13'-0" | 15'-9"e | 14'-3" | 12'-0" | 14'-5"e | 13'-5"e | 11'-4" | 13'-4"e | 12'-9"e | 10'-9" | 12'-6"e | 12'-2"e | 10'-3"e |
| 550S162-54 | 12 | 50 | 39'-4" | 31'-3" | 27'-3" | 24'-5" | 21'-4" | 18'-0" | 22'-2" | 19'-4" | 16'-4" | 20'-7" | 18'-0" | 15'-2" | 19'-4" | 16'-11" | 14'-3" | 18'-5" | 16'-1" | 13'-7" | 17'-7" | 15'-4" | 13'-0" |
| | 16 | | 35'-9" | 28'-5" | 24'-10" | 22'-2" | 19'-4" | 16'-4" | 20'-2" | 17'-7" | 14'-10" | 18'-8" | 16'-4" | 13'-9" | 17'-7" | 15'-4" | 13'-0" | 16'-9" | 14'-7" | 12'-4" | 16'-0" | 14'-0" | 11'-9" |
| | 24 | | 31'-3" | 24'-10" | 21'-8" | 19'-4" | 16'-11" | 14'-3" | 17'-7" | 15'-4" | 13'-0" | 16'-4" | 14'-3" | 12'-0" | 15'-4" | 13'-5" | 11'-4" | 14'-7" | 12'-9" | 10'-9" | 14'-0" | 12'-2" | 10'-3" |
| 550S162-68 | 12 | 50 | 42'-2" | 33'-6" | 29'-3" | 26'-2" | 22'-10" | 19'-3" | 23'-9" | 20'-9" | 17'-6" | 22'-1" | 19'-3" | 16'-3" | 20'-9" | 18'-2" | 15'-3" | 19'-9" | 17'-3" | 14'-6" | 18'-10" | 16'-6" | 13'-11" |
| | 16 | | 38'-4" | 30'-5" | 26'-7" | 23'-9" | 20'-9" | 17'-6" | 21'-7" | 18'-10" | 15'-11" | 20'-0" | 17'-6" | 14'-9" | 18'-10" | 16'-6" | 13'-11" | 17'-11" | 15'-8" | 13'-2" | 17'-2" | 15'-0" | 12'-7" |
| | 24 | | 33'-6" | 26'-7" | 23'-3" | 20'-9" | 18'-2" | 15'-3" | 18'-10" | 16'-6" | 13'-11" | 17'-6" | 15'-3" | 12'-11" | 16'-6" | 14'-5" | 12'-2" | 15'-8" | 13'-8" | 11'-6" | 15'-0" | 13'-1" | 11'-0" |
| 550S162-97 | 12 | 50 | 46'-9" | 37'-1" | 32'-5" | 28'-11" | 25'-4" | 21'-4" | 26'-4" | 23'-0" | 19'-5" | 24'-5" | 21'-4" | 18'-0" | 23'-0" | 20'-1" | 16'-11" | 21'-10" | 19'-1" | 16'-1" | 20'-11" | 18'-3" | 15'-5" |
| | 16 | | 42'-5" | 33'-8" | 29'-5" | 26'-4" | 23'-0" | 19'-5" | 23'-11" | 20'-11" | 17'-7" | 22'-2" | 19'-5" | 16'-4" | 20'-11" | 18'-3" | 15'-5" | 19'-10" | 17'-4" | 14'-7" | 19'-0" | 16'-7" | 14'-0" |
| | 24 | | 37'-1" | 29'-5" | 25'-9" | 23'-0" | 20'-1" | 16'-11" | 20'-11" | 18'-3" | 15'-5" | 19'-5" | 16'-11" | 14'-3" | 18'-3" | 15'-11" | 13'-5" | 17'-4" | 15'-2" | 12'-9" | 16'-7" | 14'-6" | 12'-3" |
| 550S200-33 | 12 | 33 | 35'-4" | 28'-0" | 24'-6" | 21'-11"e | 19'-1"e | 16'-2"e | 19'-1"e | 17'-4"e | 14'-8"e | 17'-1"e | 16'-2"e | 13'-7"e | 15'-7"e | 15'-2"e | 12'-10"e | 14'-5"e | 14'-5"e | 12'-2"e | 13'-6"e | 13'-6"e | 11'-8"e |
| | 16 | | 32'-1"e | 25'-6" | 22'-3" | 19'-1"e | 17'-4"e | 14'-8"e | 16'-6"e | 15'-9"e | 13'-4"e | 14'-9"e | 14'-8"e | 12'-4"e | 13'-6"e | 13'-6"e | 11'-8"e | 12'-6"e | 12'-6"e | 11'-1"e | 11'-8"e | 11'-8"e | 10'-7"e |
| | 24 | | 27'-0"e | 22'-3"e | 19'-5" | 15'-7"e | 15'-2"e | 12'-10"e | 13'-6"e | 13'-6"e | 11'-8"e | 12'-1"e | 12'-1"e | 10'-10"e | 11'-0"e | 11'-0"e | 10'-2"e | 10'-2"e | 10'-2"e | 9'-8"e | 9'-6"e | 9'-6"e | 9'-3"e |
| 550S200-43 | 12 | 33 | 38'-7" | 30'-7" | 26'-9" | 23'-11" | 20'-11" | 17'-7" | 21'-9" | 19'-0" | 16'-0" | 20'-2"e | 17'-7" | 14'-10" | 18'-5"e | 16'-7"e | 14'-0" | 17'-0"e | 15'-9"e | 13'-3"e | 15'-11"e | 15'-1"e | 12'-8"e |
| | 16 | | 35'-1" | 27'-10" | 24'-4" | 21'-9" | 19'-0" | 16'-0" | 19'-6"e | 17'-3"e | 14'-6" | 17'-6"e | 16'-0"e | 13'-6"e | 15'-11"e | 15'-1"e | 12'-8"e | 14'-9"e | 14'-4"e | 12'-1"e | 13'-10"e | 13'-8"e | 11'-6"e |
| | 24 | | 30'-7" | 24'-4" | 21'-3" | 18'-5"e | 16'-7"e | 14'-0" | 15'-11"e | 15'-1"e | 12'-8"e | 14'-3"e | 14'-0"e | 11'-10"e | 13'-0"e | 13'-0"e | 11'-1"e | 12'-1"e | 12'-1"e | 10'-6"e | 11'-3"e | 11'-3"e | 10'-1"e |
| 550S200-54 | 12 | 33 | 41'-5" | 32'-10" | 28'-8" | 25'-8" | 22'-5" | 18'-11" | 23'-4" | 20'-4" | 17'-2" | 21'-8" | 18'-11" | 15'-11" | 20'-4" | 17'-10" | 15'-0" | 19'-4" | 16'-11" | 14'-3" | 18'-6" | 16'-2" | 13'-8" |
| | 16 | | 37'-7" | 29'-10" | 26'-1" | 23'-4" | 20'-4" | 17'-2" | 21'-2" | 18'-6" | 15'-7" | 19'-8" | 17'-2" | 14'-6" | 18'-6" | 16'-2" | 13'-8" | 17'-5"e | 15'-4" | 12'-11" | 16'-4"e | 14'-8"e | 12'-5" |
| | 24 | | 32'-10" | 26'-1" | 22'-9" | 20'-4" | 17'-10" | 15'-0" | 18'-6" | 16'-2" | 13'-8" | 16'-10"e | 15'-0" | 12'-8" | 15'-5"e | 14'-1"e | 11'-11" | 14'-3"e | 13'-5"e | 11'-4"e | 13'-4"e | 12'-10"e | 10'-10"e |
| 550S200-54 | 12 | 50 | 41'-5" | 32'-10" | 28'-8" | 25'-8" | 22'-5" | 18'-11" | 23'-4" | 20'-4" | 17'-2" | 21'-8" | 18'-11" | 15'-11" | 20'-4" | 17'-10" | 15'-0" | 19'-4" | 16'-11" | 14'-3" | 18'-6" | 16'-2" | 13'-8" |
| | 16 | | 37'-7" | 29'-10" | 26'-1" | 23'-4" | 20'-4" | 17'-2" | 21'-2" | 18'-6" | 15'-7" | 19'-8" | 17'-2" | 14'-6" | 18'-6" | 16'-2" | 13'-8" | 17'-7" | 15'-4" | 12'-11" | 16'-10" | 14'-8" | 12'-5" |
| | 24 | | 32'-10" | 26'-1" | 22'-9" | 20'-4" | 17'-10" | 15'-0" | 18'-6" | 16'-2" | 13'-8" | 17'-2" | 15'-0" | 12'-8" | 16'-2" | 14'-1" | 11'-11" | 15'-4" | 13'-5" | 11'-4" | 14'-8"e | 12'-10" | 10'-10" |
| 550S200-68 | 12 | 50 | 44'-5" | 35'-3" | 30'-10" | 27'-6" | 24'-1" | 20'-3" | 25'-0" | 21'-10" | 18'-5" | 23'-3" | 20'-3" | 17'-1" | 21'-10" | 19'-1" | 16'-1" | 20'-9" | 18'-2" | 15'-4" | 19'-10" | 17'-4" | 14'-8" |
| | 16 | | 40'-4" | 32'-0" | 28'-0" | 25'-0" | 21'-10" | 18'-5" | 22'-9" | 19'-10" | 16'-9" | 21'-1" | 18'-5" | 15'-7" | 19'-10" | 17'-4" | 14'-8" | 18'-10" | 16'-6" | 13'-11" | 18'-0" | 15'-9" | 13'-3" |
| | 24 | | 35'-3" | 28'-0" | 24'-5" | 21'-10" | 19'-1" | 16'-1" | 19'-10" | 17'-4" | 14'-8" | 18'-5" | 16'-1" | 13'-7" | 17'-4" | 15'-2" | 12'-9" | 16'-6" | 14'-5" | 12'-2" | 15'-9" | 13'-9" | 11'-7" |
| 550S200-97 | 12 | 50 | 49'-3" | 39'-1" | 34'-2" | 30'-7" | 26'-8" | 22'-6" | 27'-9" | 24'-3" | 20'-5" | 25'-9" | 22'-6" | 19'-0" | 24'-3" | 21'-2" | 17'-10" | 23'-0" | 20'-1" | 17'-0" | 22'-0" | 19'-3" | 16'-3" |
| | 16 | | 44'-9" | 35'-7" | 31'-1" | 27'-9" | 24'-3" | 20'-5" | 25'-3" | 22'-0" | 18'-7" | 23'-5" | 20'-5" | 17'-3" | 22'-0" | 19'-3" | 16'-3" | 20'-11" | 18'-3" | 15'-5" | 20'-0" | 17'-6" | 14'-9" |
| | 24 | | 39'-1" | 31'-1" | 27'-1" | 24'-3" | 21'-2" | 17'-10" | 22'-0" | 19'-3" | 16'-3" | 20'-5" | 17'-10" | 15'-1" | 19'-3" | 16'-10" | 14'-2" | 18'-3" | 16'-0" | 13'-6" | 17'-6" | 15'-3" | 12'-11" |
| 600S137-33 | 12 | 33 | 34'-1" | 27'-4" | 23'-10" | 19'-8"e | 18'-7"e | 15'-8"e | 17'-1"e | 16'-11"e | 14'-3"e | 15'-3"e | 15'-3"e | 13'-3"e | 13'-11"e | 13'-11"e | 12'-6"e | 12'-11"e | 12'-11"e | 11'-10"e | 12'-1"e | 12'-1"e | 11'-4"e |
| | 16 | | 29'-6" | 24'-10" | 21'-8" | 17'-1"e | 16'-11"e | 14'-3"e | 14'-9"e | 14'-9"e | 13'-0"e | 13'-3"e | 13'-3"e | 12'-0"e | 12'-1"e | 12'-1"e | 11'-4"e | 11'-2"e | 11'-2"e | 10'-9"e | 10'-5"e | 10'-5"e | 10'-3"e |
| | 24 | | 24'-1"e | 21'-8"e | 18'-11" | 13'-11"e | 13'-11"e | 12'-6"e | 12'-1"e | 12'-1"e | 11'-4"e | 10'-9"e | 10'-9"e | 10'-6"e | 9'-10"e | 9'-10"e | 9'-10"e | 9'-1"e | 9'-1"e | 9'-1"e | 8'-6"e | 8'-6"e | 8'-6"e |
| 600S137-43 | 12 | 33 | 37'-8" | 29'-11" | 26'-2" | 23'-4" | 20'-5" | 17'-3" | 20'-6" | 18'-6" | 15'-8" | 18'-4"e | 17'-3"e | 14'-6" | 16'-8"e | 16'-2"e | 13'-8" | 15'-6"e | 15'-5"e | 13'-0"e | 14'-6"e | 14'-6"e | 12'-5"e |
| | 16 | | 34'-3" | 27'-2" | 23'-9" | 20'-6" | 18'-6" | 15'-8" | 17'-9"e | 16'-10"e | 14'-3" | 15'-10"e | 15'-8"e | 13'-2"e | 14'-6"e | 14'-6"e | 12'-5"e | 13'-5"e | 13'-5"e | 11'-9"e | 12'-6"e | 12'-6"e | 11'-3"e |
| | 24 | | 28'-11" | 23'-9" | 20'-9" | 16'-8"e | 16'-2"e | 13'-8" | 14'-6"e | 14'-6"e | 12'-5"e | 12'-11"e | 12'-11"e | 11'-6"e | 11'-10"e | 11'-10"e | 10'-10"e | 10'-11"e | 10'-11"e | 10'-4"e | 10'-3"e | 10'-3"e | 9'-10"e |
| 600S137-54 | 12 | 33 | 40'-5" | 32'-1" | 28'-0" | 25'-1" | 21'-11" | 18'-5" | 22'-9" | 19'-11" | 16'-9" | 20'-10" | 18'-5" | 15'-7" | 19'-1" | 17'-4" | 14'-8" | 17'-8" | 16'-6" | 13'-11" | 16'-6" | 15'-9" | 13'-4" |
| | 16 | | 36'-9" | 29'-2" | 25'-6" | 22'-9" | 19'-11" | 16'-9" | 20'-2" | 18'-1" | 15'-3" | 18'-1" | 16'-9" | 14'-2" | 16'-6" | 15'-9" | 13'-4" | 15'-3" | 15'-0" | 12'-8" | 14'-3"e | 14'-3"e | 12'-1" |
| | 24 | | 32'-1" | 25'-6" | 22'-3" | 19'-1" | 17'-4" | 14'-8" | 16'-6" | 15'-9" | 13'-4" | 14'-9"e | 14'-8" | 12'-4" | 13'-6"e | 13'-6"e | 11'-8" | 12'-6"e | 12'-6"e | 11'-1"e | 11'-8"e | 11'-8"e | 10'-7"e |
| 600S137-54 | 12 | 50 | 40'-5" | 32'-1" | 28'-0" | 25'-1" | 21'-11" | 18'-5" | 22'-9" | 19'-11" | 16'-9" | 21'-2" | 18'-5" | 15'-7" | 19'-11" | 17'-4" | 14'-8" | 18'-1" | 16'-6" | 13'-11" | 18'-1" | 15'-9" | 13'-4" |
| | 16 | | 36'-9" | 29'-2" | 25'-6" | 22'-9" | 19'-11" | 16'-9" | 20'-8" | 18'-1" | 15'-3" | 19'-2" | 16'-9" | 14'-2" | 18'-1" | 15'-9" | 13'-4" | 17'-2" | 15'-0" | 12'-8" | 16'-5" | 14'-4" | 12'-1" |
| | 24 | | 32'-1" | 25'-6" | 22'-3" | 19'-11" | 17'-4" | 14'-8" | 18'-1" | 15'-9" | 13'-4" | 16'-9" | 14'-8" | 12'-4" | 15'-9" | 13'-9" | 11'-8" | 14'-9" | 13'-1" | 11'-1" | 13'-10" | 12'-6" | 10'-7" |
| 600S137-68 | 12 | 50 | 43'-4" | 34'-4" | 30'-0" | 26'-10" | 23'-5" | 19'-9" | 24'-5" | 21'-4" | 18'-0" | 22'-8" | 19'-9" | 16'-8" | 21'-4" | 18'-7" | 15'-8" | 20'-3" | 17'-8" | 14'-11" | 19'-4" | 16'-11" | 14'-3" |
| | 16 | | 39'-4" | 31'-3" | 27'-3" | 24'-5" | 21'-4" | 18'-0" | 22'-2" | 19'-4" | 16'-4" | 20'-7" | 18'-0" | 15'-2" | 19'-4" | 16'-11" | 14'-3" | 18'-5" | 16'-1" | 13'-7" | 17'-7" | 15'-4" | 12'-11" |
| | 24 | | 34'-4" | 27'-3" | 23'-10" | 21'-4" | 18'-7" | 15'-8" | 19'-4" | 16'-11" | 14'-3" | 18'-0" | 15'-8" | 13'-3" | 16'-11" | 14'-9" | 12'-5" | 16'-1" | 14'-0" | 11'-10" | 15'-4" | 13'-5" | 11'-4" |
| 600S137-97 | 12 | 50 | 47'-11" | 38'-0" | 33'-3" | 29'-8" | 25'-11" | 21'-10" | 27'-0" | 23'-7" | 19'-10" | 25'-0" | 21'-10" | 18'-5" | 23'-7" | 20'-7" | 17'-4" | 22'-5" | 19'-7" | 16'-6" | 21'-5" | 18'-8" | 15'-9" |
| | 16 | | 43'-6" | 34'-6" | 30'-2" | 27'-0" | 23'-7" | 19'-10" | 24'-6" | 21'-5" | 18'-1" | 22'-9" | 19'-10" | 16'-9" | 21'-5" | 18'-8" | 15'-9" | 20'-4" | 17'-9" | 15'-0" | 19'-5" | 17'-0" | 14'-4" |
| | 24 | | 38'-0" | 30'-2" | 26'-4" | 23'-7" | 20'-7" | 17'-4" | 21'-5" | 18'-8" | 15'-9" | 19'-10" | 17'-4" | 14'-8" | 18'-8" | 16'-4" | 13'-9" | 17'-9" | 15'-6" | 13'-1" | 17'-0" | 14'-10" | 12'-6" |
| 600S162-33 | 12 | 33 | 36'-1" | 28'-8" | 25'-0" | 22'-4"e | 19'-7"e | 16'-6"e | 19'-5"e | 17'-9"e | 15'-0"e | 17'-5"e | 16'-6"e | 13'-11"e | 15'-10"e | 15'-6"e | 13'-1"e | 14'-8"e | 14'-8"e | 12'-5"e | 13'-9"e | 13'-9"e | 11'-11"e |
| | 16 | | 32'-9"e | 26'-0" | 22'-9" | 19'-5"e | 17'-9"e | 15'-0"e | 16'-10"e | 16'-2"e | 13'-7"e | 15'-1"e | 15'-0"e | 12'-8"e | 13'-9"e | 13'-9"e | 11'-11"e | 12'-9"e | 12'-9"e | 11'-3"e | 11'-11"e | 11'-11"e | 10'-10"e |
| | 24 | | 27'-6"e | 22'-9"e | 19'-10" | 15'-10"e | 15'-6"e | 13'-1"e | 13'-9"e | 13'-9"e | 11'-11"e | 12'-3"e | 12'-3"e | 11'-0"e | 11'-3"e | 11'-3"e | 10'-5"e | 10'-5"e | 10'-5"e | 9'-10"e | 9'-9"e | 9'-9"e | 9'-5"e |
| 600S162-43 | 12 | 33 | 39'-4" | 31'-2" | 27'-3" | 24'-4" | 21'-3" | 17'-11" | 22'-2"e | 19'-4" | 16'-4" | 20'-7"e | 17'-11"e | 15'-2" | 19'-0"e | 16'-11"e | 14'-3" | 17'-7"e | 16'-1"e | 13'-6"e | 16'-6"e | 15'-4"e | 12'-11"e |
| | 16 | | 35'-9" | 28'-4" | 24'-9" | 22'-2"e | 19'-4" | 16'-4" | 20'-1"e | 17'-7"e | 14'-10" | 18'-1"e | 16'-4"e | 13'-9"e | 16'-6"e | 15'-4"e | 12'-11"e | 15'-3"e | 14'-7"e | 12'-4"e | 14'-3"e | 13'-11"e | 11'-9"e |
| | 24 | | 31'-2" | 24'-9" | 21'-8" | 19'-0"e | 16'-11"e | 14'-3" | 16'-6"e | 15'-4"e | 12'-11"e | 14'-9"e | 14'-3"e | 12'-0"e | 13'-5"e | 13'-5"e | 11'-4"e | 12'-5"e | 12'-5"e | 10'-9"e | 11'-8"e | 11'-8"e | 10'-3"e |
| 600S162-54 | 12 | 33 | 42'-2" | 33'-6" | 29'-3" | 26'-2" | 22'-10" | 19'-3" | 23'-9" | 20'-9" | 17'-6" | 22'-1" | 19'-3" | 16'-3" | 20'-9" | 18'-1" | 15'-3" | 19'-8" | 17'-3" | 14'-6" | 18'-9"e | 16'-6" | 13'-11" |
| | 16 | | 38'-4" | 30'-5" | 26'-7" | 23'-9" | 20'-9" | 17'-6" | 21'-7" | 18'-10" | 15'-11" | 20'-0" | 17'-6" | 14'-9" | 18'-9"e | 16'-6" | 13'-11" | 17'-4"e | 15'-8" | 13'-2" | 16'-3"e | 15'-0"e | 12'-7" |
| | 24 | | 33'-6" | 26'-7" | 23'-3" | 20'-9" | 18'-1" | 15'-3" | 18'-9"e | 16'-6" | 13'-11" | 16'-9"e | 15'-3"e | 12'-11" | 15'-4"e | 14'-5"e | 12'-2" | 14'-2"e | 13'-8"e | 11'-6"e | 13'-3"e | 13'-1"e | 11'-0"e |

See Curtain Wall Limiting Heights Table Notes

# Wall Height

| Stud Member | Spacing, in, oc | Fy, ksi | 5 psf | | | 15 psf | | | 20 psf | | | 25 psf | | | 30 psf | | | 35 psf | | | 40 psf | | |
|---|---|---|---|---|---|---|---|---|---|---|---|---|---|---|---|---|---|---|---|---|---|---|---|
| | | | L/120 | L/240 | L/360 | L/240 | L/360 | L/600 | L/240 | L/360 | L/600 | L/240 | L/360 | L/600 | L/240 | L/360 | L/600 | L/240 | L/360 | L/600 | L/240 | L/360 | L/600 |
| 600S162-54 | 12 | 50 | 42'-2" | 33'-6" | 29'-3" | 26'-2" | 22'-10" | 19'-3" | 23'-9" | 20'-9" | 17'-6" | 22'-1" | 19'-3" | 16'-3" | 20'-9" | 18'-1" | 15'-3" | 19'-8" | 17'-3" | 14'-6" | 18'-10" | 16'-6" | 13'-11" |
| | 16 | | 38'-4" | 30'-5" | 26'-7" | 23'-9" | 20'-9" | 17'-6" | 21'-7" | 18'-10" | 15'-11" | 20'-0" | 17'-6" | 14'-9" | 18'-10" | 16'-6" | 13'-11" | 17'-11" | 15'-8" | 13'-2" | 17'-2" | 15'-0" | 12'-7" |
| | 24 | | 33'-6" | 26'-7" | 23'-3" | 20'-9" | 18'-1" | 15'-3" | 18'-10" | 16'-6" | 13'-11" | 17'-6" | 15'-3" | 12'-11" | 16'-6" | 14'-5" | 12'-2" | 15'-8" | 13'-8" | 11'-6" | 15'-0"e | 13'-1" | 11'-0" |
| 600S162-68 | 12 | 50 | 45'-3" | 35'-11" | 31'-4" | 28'-0" | 24'-6" | 20'-8" | 25'-6" | 22'-3" | 18'-9" | 23'-8" | 20'-8" | 17'-5" | 22'-3" | 19'-5" | 16'-5" | 21'-2" | 18'-6" | 15'-7" | 20'-3" | 17'-8" | 14'-11" |
| | 16 | | 41'-1" | 32'-7" | 28'-6" | 25'-6" | 22'-3" | 18'-9" | 23'-2" | 20'-3" | 17'-1" | 21'-6" | 18'-9" | 15'-10" | 20'-3" | 17'-8" | 14'-11" | 19'-2" | 16'-9" | 14'-2" | 18'-4" | 16'-0" | 13'-6" |
| | 24 | | 35'-11" | 28'-6" | 24'-11" | 22'-3" | 19'-5" | 16'-5" | 20'-3" | 17'-8" | 14'-11" | 18'-9" | 16'-5" | 13'-10" | 17'-8" | 15'-5" | 13'-0" | 16'-9" | 14'-8" | 12'-4" | 16'-0" | 14'-0" | 11'-10" |
| 600S162-97 | 12 | 50 | 50'-1" | 39'-9" | 34'-9" | 31'-1" | 27'-2" | 22'-11" | 28'-3" | 24'-8" | 20'-10" | 26'-2" | 22'-11" | 19'-4" | 24'-8" | 21'-6" | 18'-2" | 23'-5" | 20'-5" | 17'-3" | 22'-5" | 19'-7" | 16'-6" |
| | 16 | | 45'-6" | 36'-2" | 31'-7" | 28'-3" | 24'-8" | 20'-10" | 25'-8" | 22'-5" | 18'-11" | 23'-10" | 20'-10" | 17'-6" | 22'-5" | 19'-7" | 16'-6" | 21'-3" | 18'-7" | 15'-8" | 20'-4" | 17'-9" | 15'-0" |
| | 24 | | 39'-9" | 31'-7" | 27'-7" | 24'-8" | 21'-6" | 18'-2" | 22'-5" | 19'-7" | 16'-6" | 20'-10" | 18'-2" | 15'-4" | 19'-7" | 17'-1" | 14'-5" | 18'-7" | 16'-3" | 13'-8" | 17'-9" | 15'-6" | 13'-1" |
| 600S162-118 | 12 | 50 | 52'-11" | 42'-0" | 36'-8" | 32'-10" | 28'-8" | 24'-2" | 29'-10" | 26'-1" | 22'-0" | 27'-8" | 24'-2" | 20'-5" | 26'-1" | 22'-9" | 19'-2" | 24'-9" | 21'-7" | 18'-3" | 23'-8" | 20'-8" | 17'-5" |
| | 16 | | 48'-1" | 38'-2" | 33'-4" | 29'-10" | 26'-1" | 22'-0" | 27'-1" | 23'-8" | 19'-11" | 25'-2" | 22'-0" | 18'-6" | 23'-8" | 20'-8" | 17'-5" | 22'-6" | 19'-8" | 16'-7" | 21'-6" | 18'-9" | 15'-10" |
| | 24 | | 42'-0" | 33'-4" | 29'-2" | 26'-1" | 22'-9" | 19'-2" | 23'-8" | 20'-8" | 17'-5" | 22'-0" | 19'-2" | 16'-2" | 20'-8" | 18'-1" | 15'-3" | 19'-8" | 17'-2" | 14'-6" | 18'-9" | 16'-5" | 13'-10" |
| 600S200-33 | 12 | 33 | 37'-10" | 30'-0" | 26'-3" | 23'-2"e | 20'-6"e | 17'-3"e | 20'-1"e | 18'-7"e | 15'-8"e | 17'-11"e | 17'-3"e | 14'-7"e | 16'-4"e | 16'-3"e | 13'-8"e | 15'-2"e | 15'-2"e | 13'-0"e | 14'-2"e | 14'-2"e | 12'-5"e |
| | 16 | | 34'-4"e | 27'-3" | 23'-10" | 20'-1"e | 18'-7"e | 15'-8"e | 17'-4"e | 16'-11"e | 14'-3"e | 15'-6"e | 15'-6"e | 13'-3"e | 14'-2"e | 14'-2"e | 12'-5"e | 13'-1"e | 13'-1"e | 11'-10"e | 12'-3"e | 12'-3"e | 11'-4"e |
| | 24 | | 28'-4"e | 23'-10"e | 20'-10"e | 16'-4"e | 16'-3"e | 13'-8"e | 14'-2"e | 14'-2"e | 12'-5"e | 12'-8"e | 12'-8"e | 11'-7"e | 11'-7"e | 11'-7"e | 10'-11"e | 10'-9"e | 10'-9"e | 10'-4"e | 10'-0"e | 10'-0"e | 9'-11"e |
| 600S200-43 | 12 | 33 | 41'-3" | 32'-9" | 28'-7" | 25'-7" | 22'-4" | 18'-10" | 23'-3"e | 20'-4" | 17'-2" | 21'-5"e | 18'-10"e | 15'-11" | 19'-6"e | 17'-9"e | 15'-0"e | 18'-1"e | 16'-10"e | 14'-3"e | 16'-11"e | 16'-1"e | 13'-7"e |
| | 16 | | 37'-6" | 29'-9" | 26'-0" | 23'-3"e | 20'-4" | 17'-2" | 20'-9"e | 18'-5"e | 15'-7" | 18'-6"e | 17'-2"e | 14'-5"e | 16'-11"e | 16'-1"e | 13'-7"e | 15'-8"e | 15'-4"e | 12'-11"e | 14'-8"e | 14'-8"e | 12'-4"e |
| | 24 | | 32'-9" | 26'-0" | 22'-9" | 19'-6"e | 17'-9"e | 15'-0"e | 16'-11"e | 16'-1"e | 13'-7"e | 15'-2"e | 15'-0"e | 12'-7"e | 13'-10"e | 13'-10"e | 11'-11"e | 12'-9"e | 12'-9"e | 11'-3"e | 12'-0"e | 12'-0"e | 10'-9"e |
| 600S200-54 | 12 | 33 | 44'-4" | 35'-2" | 30'-9" | 27'-6" | 24'-0" | 20'-3" | 24'-11" | 21'-10" | 18'-5" | 23'-2" | 20'-3" | 17'-1" | 21'-10" | 19'-1" | 16'-1" | 20'-9" | 18'-1" | 15'-3" | 19'-10"e | 17'-4" | 14'-7" |
| | 16 | | 40'-3" | 32'-0" | 27'-11" | 24'-11" | 21'-10" | 18'-5" | 22'-8" | 19'-10" | 16'-8" | 21'-1" | 18'-5" | 15'-6" | 19'-10"e | 17'-4" | 14'-7" | 18'-6"e | 16'-5"e | 13'-10" | 17'-4"e | 15'-9"e | 13'-3" |
| | 24 | | 35'-2" | 27'-11" | 24'-5" | 21'-10" | 19'-1" | 16'-1" | 19'-10"e | 17'-4" | 14'-7" | 17'-10"e | 16'-1"e | 13'-7" | 16'-4"e | 15'-1"e | 12'-9"e | 15'-1"e | 14'-4"e | 12'-1"e | 14'-2"e | 13'-9"e | 11'-7"e |
| 600S200-54 | 12 | 50 | 44'-4" | 35'-2" | 30'-9" | 27'-6" | 24'-0" | 20'-3" | 24'-11" | 21'-10" | 18'-5" | 23'-2" | 20'-3" | 17'-1" | 21'-10" | 19'-1" | 16'-1" | 20'-9" | 18'-1" | 15'-3" | 19'-10" | 17'-4" | 14'-7" |
| | 16 | | 40'-3" | 32'-0" | 27'-11" | 24'-11" | 21'-10" | 18'-5" | 22'-8" | 19'-10" | 16'-8" | 21'-1" | 18'-5" | 15'-6" | 19'-10" | 17'-4" | 14'-7" | 18'-10" | 16'-5" | 13'-10" | 18'-0" | 15'-9" | 13'-3" |
| | 24 | | 35'-2" | 27'-11" | 24'-5" | 21'-10" | 19'-1" | 16'-1" | 19'-10" | 17'-4" | 14'-7" | 18'-5" | 16'-1" | 13'-7" | 17'-4" | 15'-1" | 12'-9" | 16'-5"e | 14'-4" | 12'-1" | 15'-9"e | 13'-9" | 11'-7" |
| 600S200-68 | 12 | 50 | 47'-7" | 37'-9" | 33'-0" | 29'-6" | 25'-9" | 21'-9" | 26'-9" | 23'-5" | 19'-9" | 24'-10" | 21'-9" | 18'-4" | 23'-5" | 20'-5" | 17'-3" | 22'-3" | 19'-5" | 16'-4" | 21'-3" | 18'-7" | 15'-8" |
| | 16 | | 43'-2" | 34'-4" | 29'-11" | 26'-9" | 23'-5" | 19'-9" | 24'-4" | 21'-3" | 17'-11" | 22'-7" | 19'-9" | 16'-8" | 21'-3" | 18'-7" | 15'-8" | 20'-2" | 17'-8" | 14'-11" | 19'-4" | 16'-10" | 14'-3" |
| | 24 | | 37'-9" | 29'-11" | 26'-2" | 23'-5" | 20'-5" | 17'-3" | 21'-3" | 18'-7" | 15'-8" | 19'-9" | 17'-3" | 14'-6" | 18'-7" | 16'-3" | 13'-8" | 17'-8" | 15'-5" | 13'-0" | 16'-10" | 14'-9" | 12'-5" |
| 600S200-97 | 12 | 50 | 52'-10" | 41'-11" | 36'-7" | 32'-9" | 28'-7" | 24'-1" | 29'-9" | 26'-0" | 21'-11" | 27'-7" | 24'-1" | 20'-4" | 26'-0" | 22'-8" | 19'-2" | 24'-8" | 21'-7" | 18'-2" | 23'-7" | 20'-7" | 17'-5" |
| | 16 | | 48'-0" | 38'-1" | 33'-3" | 29'-9" | 26'-0" | 21'-11" | 27'-0" | 23'-7" | 19'-11" | 25'-1" | 21'-11" | 18'-6" | 23'-7" | 20'-7" | 17'-5" | 22'-5" | 19'-7" | 16'-6" | 21'-5" | 18'-9" | 15'-10" |
| | 24 | | 41'-11" | 33'-3" | 29'-1" | 26'-0" | 22'-8" | 19'-2" | 23'-7" | 20'-7" | 17'-5" | 21'-11" | 19'-2" | 16'-2" | 20'-7" | 18'-0" | 15'-2" | 19'-7" | 17'-1" | 14'-5" | 18'-9" | 16'-4" | 13'-10" |
| 600S200-118 | 12 | 50 | 55'-10" | 44'-4" | 38'-9" | 34'-7" | 30'-3" | 25'-6" | 31'-5" | 27'-6" | 23'-2" | 29'-2" | 25'-6" | 21'-6" | 27'-6" | 24'-0" | 20'-3" | 26'-1" | 22'-10" | 19'-3" | 25'-0" | 21'-10" | 18'-5" |
| | 16 | | 50'-9" | 40'-3" | 35'-2" | 31'-5" | 27'-6" | 23'-2" | 28'-7" | 25'-0" | 21'-1" | 26'-6" | 23'-2" | 19'-7" | 25'-0" | 21'-10" | 18'-5" | 23'-9" | 20'-9" | 17'-6" | 22'-8" | 19'-10" | 16'-9" |
| | 24 | | 44'-4" | 35'-2" | 30'-9" | 27'-6" | 24'-0" | 20'-3" | 25'-0" | 21'-10" | 18'-5" | 23'-2" | 20'-3" | 17'-1" | 21'-10" | 19'-1" | 16'-1" | 20'-9" | 18'-1" | 15'-3" | 19'-10" | 17'-4" | 14'-7" |
| 600S250-43 | 12 | 33 | 43'-3" | 34'-4" | 30'-0" | 26'-10" | 23'-5" | 19'-9" | 24'-4"e | 21'-3" | 17'-11" | 21'-11"e | 19'-9"e | 16'-8" | 20'-0"e | 18'-7"e | 15'-8"e | 18'-6"e | 17'-8"e | 14'-11"e | 17'-4"e | 16'-11"e | 14'-3"e |
| | 16 | | 39'-3" | 31'-2" | 27'-3" | 24'-4"e | 21'-3" | 17'-11" | 21'-2"e | 19'-4"e | 16'-4"e | 18'-11"e | 17'-11"e | 15'-2"e | 17'-4"e | 16'-11"e | 14'-3"e | 16'-0"e | 16'-0"e | 13'-6"e | 15'-0"e | 15'-0"e | 12'-11"e |
| | 24 | | 34'-4" | 27'-3" | 23'-10" | 20'-0"e | 18'-7"e | 15'-8"e | 17'-4"e | 16'-11"e | 14'-3"e | 15'-6"e | 15'-6"e | 13'-3"e | 14'-2"e | 14'-2"e | 12'-5"e | 13'-1"e | 13'-1"e | 11'-10"e | 12'-3"e | 12'-3"e | 11'-4"e |
| 600S250-54 | 12 | 33 | 46'-5" | 36'-10" | 32'-2" | 28'-9" | 25'-2" | 21'-2" | 26'-2" | 22'-10" | 19'-3" | 24'-3" | 21'-2" | 17'-11" | 22'-6" | 19'-11" | 16'-10" | 20'-10" | 18'-11" | 16'-0" | 19'-5"e | 18'-2" | 15'-4" |
| | 16 | | 42'-2" | 33'-6" | 29'-3" | 26'-2" | 22'-10" | 19'-3" | 23'-9" | 20'-9" | 17'-6" | 21'-4" | 19'-3" | 16'-3" | 19'-5"e | 18'-2" | 15'-4" | 18'-0"e | 17'-3"e | 14'-6" | 16'-10"e | 16'-6"e | 13'-11"e |
| | 24 | | 36'-10" | 29'-3" | 25'-7" | 22'-6" | 19'-11" | 16'-10" | 19'-5"e | 18'-2" | 15'-4" | 17'-5"e | 16'-10"e | 14'-2" | 15'-11"e | 15'-10"e | 13'-4"e | 14'-8"e | 14'-8"e | 12'-8"e | 13'-9"e | 13'-9"e | 12'-2"e |
| 600S250-54 | 12 | 50 | 46'-3" | 36'-9" | 32'-1" | 28'-8" | 25'-1" | 21'-1" | 26'-1" | 22'-9" | 19'-2" | 24'-2" | 21'-1" | 17'-10" | 22'-9" | 19'-11" | 16'-9" | 21'-7" | 18'-11" | 15'-11" | 20'-8" | 18'-1" | 15'-3" |
| | 16 | | 42'-0" | 33'-4" | 29'-2" | 26'-1" | 22'-9" | 19'-2" | 23'-8" | 20'-8" | 17'-5" | 22'-0" | 19'-2" | 16'-2" | 20'-8" | 18'-1" | 15'-3" | 19'-8" | 17'-2" | 14'-6" | 18'-9" | 16'-5" | 13'-10" |
| | 24 | | 36'-9" | 29'-2" | 25'-5" | 22'-9" | 19'-11" | 16'-9" | 20'-8" | 18'-1" | 15'-3" | 19'-2" | 16'-9" | 14'-2" | 18'-1" | 15'-9" | 13'-4" | 17'-2"e | 15'-0" | 12'-8" | 16'-3"e | 14'-4"e | 12'-1" |
| 600S250-68 | 12 | 50 | 49'-10" | 39'-7" | 34'-7" | 30'-11" | 27'-0" | 22'-9" | 28'-1" | 24'-6" | 20'-8" | 26'-1" | 22'-9" | 19'-2" | 24'-6" | 21'-5" | 18'-1" | 23'-4" | 20'-4" | 17'-2" | 22'-3" | 19'-6" | 16'-5" |
| | 16 | | 45'-4" | 35'-11" | 31'-5" | 28'-1" | 24'-6" | 20'-8" | 25'-6" | 22'-3" | 18'-10" | 23'-8" | 20'-8" | 17'-5" | 22'-3" | 19'-6" | 16'-5" | 21'-2" | 18'-6" | 15'-7" | 20'-3" | 17'-8" | 14'-11" |
| | 24 | | 39'-7" | 31'-5" | 27'-5" | 24'-6" | 21'-5" | 18'-1" | 22'-3" | 19'-6" | 16'-5" | 20'-8" | 18'-1" | 15'-3" | 19'-6" | 17'-0" | 14'-4" | 18'-6" | 16'-2" | 13'-8" | 17'-8" | 15'-5" | 13'-0" |
| 600S250-97 | 12 | 50 | 55'-5" | 44'-0" | 38'-5" | 34'-4" | 30'-0" | 25'-4" | 31'-3" | 27'-3" | 23'-0" | 29'-0" | 25'-4" | 21'-4" | 27'-3" | 23'-10" | 20'-1" | 25'-11" | 22'-8" | 19'-1" | 24'-9" | 21'-8" | 18'-3" |
| | 16 | | 50'-4" | 40'-0" | 34'-11" | 31'-3" | 27'-3" | 23'-0" | 28'-4" | 24'-9" | 20'-11" | 26'-4" | 23'-0" | 19'-5" | 24'-9" | 21'-8" | 18'-3" | 23'-6" | 20'-7" | 17'-4" | 22'-6" | 19'-8" | 16'-7" |
| | 24 | | 44'-0" | 34'-11" | 30'-6" | 27'-3" | 23'-10" | 20'-1" | 24'-9" | 21'-8" | 18'-3" | 23'-0" | 20'-1" | 16'-11" | 21'-8" | 18'-11" | 15'-11" | 20'-7" | 18'-0" | 15'-2" | 19'-8" | 17'-2" | 14'-6" |
| 600S250-118 | 12 | 50 | 58'-9" | 46'-7" | 40'-9" | 36'-5" | 31'-9" | 26'-10" | 33'-1" | 28'-11" | 24'-4" | 30'-8" | 26'-10" | 22'-7" | 28'-11" | 25'-3" | 21'-3" | 27'-5" | 24'-0" | 20'-3" | 26'-3" | 22'-11" | 19'-4" |
| | 16 | | 53'-4" | 42'-4" | 37'-0" | 33'-1" | 28'-11" | 24'-4" | 30'-0" | 26'-3" | 22'-2" | 27'-11" | 24'-4" | 20'-7" | 26'-3" | 22'-11" | 19'-4" | 24'-11" | 21'-9" | 18'-4" | 23'-10" | 20'-10" | 17'-7" |
| | 24 | | 46'-7" | 37'-0" | 32'-4" | 28'-11" | 25'-3" | 21'-3" | 26'-3" | 22'-11" | 19'-4" | 24'-4" | 21'-3" | 17'-11" | 22'-11" | 20'-0" | 16'-11" | 21'-9" | 19'-0" | 16'-1" | 20'-10" | 18'-2" | 15'-4" |
| 600S300-54 | 12 | 33 | 48'-3" | 38'-3" | 33'-5" | 29'-11" | 26'-1" | 22'-0" | 27'-2" | 23'-9" | 20'-0" | 25'-1" | 22'-0" | 18'-7" | 22'-11" | 20'-9" | 17'-6" | 21'-3"e | 19'-8" | 16'-7" | 19'-10"e | 18'-10"e | 15'-11" |
| | 16 | | 43'-10" | 34'-9" | 30'-5" | 27'-2" | 23'-9" | 20'-0" | 24'-4" | 21'-7" | 18'-2" | 21'-9" | 20'-0" | 16'-10" | 19'-10"e | 18'-10"e | 15'-11" | 18'-5"e | 17'-11"e | 15'-1" | 17'-2"e | 17'-1"e | 14'-5"e |
| | 24 | | 38'-3" | 30'-5" | 26'-6" | 22'-11" | 20'-9" | 17'-6" | 19'-10"e | 18'-10"e | 15'-11" | 17'-9"e | 17'-6"e | 14'-9"e | 16'-2"e | 16'-2"e | 13'-10"e | 15'-0"e | 15'-0"e | 13'-2"e | 14'-0"e | 14'-0"e | 12'-7"e |
| 600S300-54 | 12 | 50 | 47'-3" | 37'-6" | 32'-9" | 29'-4" | 25'-7" | 21'-7" | 26'-8" | 23'-3" | 19'-7" | 24'-9" | 21'-7" | 18'-3" | 23'-3" | 20'-4" | 17'-2" | 22'-1" | 19'-4" | 16'-3" | 21'-2" | 18'-6" | 15'-7" |
| | 16 | | 43'-0" | 34'-1" | 29'-9" | 26'-8" | 23'-3" | 19'-7" | 24'-2" | 21'-2" | 17'-10" | 22'-6" | 19'-7" | 16'-7" | 21'-2" | 18'-6" | 15'-7" | 20'-1" | 17'-6" | 14'-10" | 19'-2" | 16'-9" | 14'-2" |
| | 24 | | 37'-6" | 29'-9" | 26'-0" | 23'-3" | 20'-4" | 17'-2" | 21'-2" | 18'-6" | 15'-7" | 19'-7" | 17'-2" | 14'-5" | 18'-6" | 16'-2" | 13'-7" | 17'-6"e | 15'-4" | 12'-11" | 16'-6"e | 14'-8"e | 12'-4" |

See Curtain Wall Limiting Heights Table Notes

# Wall Height

| Stud Member | Spacing, in, oc | Fy, ksi | 5 psf | | | 15 psf | | | 20 psf | | | 25 psf | | | 30 psf | | | 35 psf | | | 40 psf | | |
|---|---|---|---|---|---|---|---|---|---|---|---|---|---|---|---|---|---|---|---|---|---|---|---|
| | | | L/120 | L/240 | L/360 | L/240 | L/360 | L/600 | L/240 | L/360 | L/600 | L/240 | L/360 | L/600 | L/240 | L/360 | L/600 | L/240 | L/360 | L/600 | L/240 | L/360 | L/600 |
| 600S300-68 | 12 | 50 | 51'-7" | 40'-11" | 35'-9" | 32'-0" | 27'-11" | 23'-7" | 29'-0" | 25'-4" | 21'-5" | 26'-11" | 23'-7" | 19'-10" | 25'-4" | 22'-2" | 18'-8" | 24'-1" | 21'-1" | 17'-9" | 23'-1" | 20'-2" | 17'-0" |
| | 16 | | 46'-10" | 37'-2" | 32'-6" | 29'-0" | 25'-4" | 21'-5" | 26'-5" | 23'-1" | 19'-5" | 24'-6" | 21'-5" | 18'-1" | 23'-1" | 20'-2" | 17'-0" | 21'-11" | 19'-1" | 16'-2" | 20'-11" | 18'-4" | 15'-5" |
| | 24 | | 40'-11" | 32'-6" | 28'-5" | 25'-4" | 22'-2" | 18'-8" | 23'-1" | 20'-2" | 17'-0" | 21'-5" | 18'-8" | 15'-9" | 20'-2" | 17'-7" | 14'-10" | 19'-1" | 16'-8" | 14'-1" | 18'-4" | 16'-0" | 13'-6" |
| 600S300-97 | 12 | 50 | 57'-7" | 45'-9" | 39'-11" | 35'-9" | 31'-2" | 26'-4" | 32'-5" | 28'-4" | 23'-11" | 30'-1" | 26'-4" | 22'-2" | 28'-4" | 24'-9" | 20'-11" | 26'-11" | 23'-6" | 19'-10" | 25'-9" | 22'-6" | 19'-0" |
| | 16 | | 52'-4" | 41'-7" | 36'-4" | 32'-5" | 28'-4" | 23'-11" | 29'-6" | 25'-9" | 21'-9" | 27'-4" | 23'-11" | 20'-2" | 25'-9" | 22'-6" | 19'-0" | 24'-6" | 21'-4" | 18'-0" | 23'-5" | 20'-5" | 17'-3" |
| | 24 | | 45'-9" | 36'-4" | 31'-8" | 28'-4" | 24'-9" | 20'-11" | 25'-9" | 22'-6" | 19'-0" | 23'-11" | 20'-11" | 17'-7" | 22'-6" | 19'-8" | 16'-7" | 21'-4" | 18'-8" | 15'-9" | 20'-5" | 17'-10" | 15'-1" |
| 600S300-118 | 12 | 50 | 61'-4" | 48'-8" | 42'-6" | 38'-0" | 33'-2" | 28'-0" | 34'-6" | 30'-2" | 25'-5" | 32'-1" | 28'-0" | 23'-7" | 30'-2" | 26'-4" | 22'-3" | 28'-8" | 25'-0" | 21'-1" | 27'-5" | 23'-11" | 20'-2" |
| | 16 | | 55'-8" | 44'-3" | 38'-8" | 34'-6" | 30'-2" | 25'-5" | 31'-4" | 27'-5" | 23'-1" | 29'-1" | 25'-5" | 21'-5" | 27'-5" | 23'-11" | 20'-2" | 26'-0" | 22'-9" | 19'-2" | 24'-11" | 21'-9" | 18'-4" |
| | 24 | | 48'-8" | 38'-8" | 33'-9" | 30'-2" | 26'-4" | 22'-3" | 27'-5" | 23'-11" | 20'-2" | 25'-5" | 22'-3" | 18'-9" | 23'-11" | 20'-11" | 17'-8" | 22'-9" | 19'-10" | 16'-9" | 21'-9" | 19'-0" | 16'-0" |
| 600S350-54 | 12 | 50 | 49'-11" | 39'-7" | 34'-7" | 30'-11" | 27'-0" | 22'-9" | 28'-1" | 24'-6" | 20'-8" | 26'-1" | 22'-9" | 19'-3" | 24'-6" | 21'-5" | 18'-1" | 23'-4" | 20'-4" | 17'-2" | 22'-4" | 19'-6" | 16'-5" |
| | 16 | | 45'-4" | 36'-0" | 31'-5" | 28'-1" | 24'-6" | 20'-8" | 25'-6" | 22'-4" | 18'-10" | 23'-8" | 20'-8" | 17'-5" | 22'-4" | 19'-6" | 16'-5" | 21'-2" | 18'-6" | 15'-7" | 20'-3" | 17'-8" | 14'-11" |
| | 24 | | 39'-7" | 31'-5" | 27'-5" | 24'-6" | 21'-5" | 18'-1" | 22'-4" | 19'-6" | 16'-5" | 20'-8" | 18'-1" | 15'-3" | 19'-6"e | 17'-0" | 14'-4" | 18'-6"e | 16'-2"e | 13'-8" | 17'-8"e | 15'-6"e | 13'-0" |
| 600S350-68 | 12 | 50 | 54'-6" | 43'-3" | 37'-10" | 33'-9" | 29'-6" | 24'-11" | 30'-8" | 26'-10" | 22'-7" | 28'-6" | 24'-11" | 21'-0" | 26'-10" | 23'-5" | 19'-9" | 25'-6" | 22'-3" | 18'-9" | 24'-4" | 21'-3" | 17'-11" |
| | 16 | | 49'-6" | 39'-4" | 34'-4" | 30'-8" | 26'-10" | 22'-7" | 27'-11" | 24'-4" | 20'-7" | 25'-11" | 22'-7" | 19'-1" | 24'-4" | 21'-3" | 17'-11" | 23'-2" | 20'-3" | 17'-1" | 22'-2" | 19'-4" | 16'-4" |
| | 24 | | 43'-3" | 34'-4" | 30'-0" | 26'-10" | 23'-5" | 19'-9" | 24'-4" | 21'-3" | 17'-11" | 22'-7" | 19'-9" | 16'-8" | 21'-3" | 18'-7" | 15'-8" | 20'-3" | 17'-8" | 14'-11" | 19'-4" | 16'-11" | 14'-3" |
| 600S350-97 | 12 | 50 | 60'-11" | 48'-5" | 42'-3" | 37'-9" | 33'-0" | 27'-10" | 34'-4" | 30'-0" | 25'-3" | 31'-10" | 27'-10" | 23'-6" | 30'-0" | 26'-2" | 22'-1" | 28'-6" | 24'-11" | 21'-0" | 27'-3" | 23'-10" | 20'-1" |
| | 16 | | 55'-5" | 43'-11" | 38'-5" | 34'-4" | 30'-0" | 25'-3" | 31'-2" | 27'-3" | 23'-0" | 28'-11" | 25'-3" | 21'-4" | 27'-3" | 23'-10" | 20'-1" | 25'-11" | 22'-7" | 19'-1" | 24'-9" | 21'-7" | 18'-3" |
| | 24 | | 48'-5" | 38'-5" | 33'-6" | 30'-0" | 26'-2" | 22'-1" | 27'-3" | 23'-10" | 20'-1" | 25'-3" | 22'-1" | 18'-8" | 23'-10" | 20'-9" | 17'-6" | 22'-7" | 19'-9" | 16'-8" | 21'-7" | 18'-11" | 15'-11" |
| 600S350-118 | 12 | 50 | 64'-8" | 51'-4" | 44'-10" | 40'-1" | 35'-0" | 29'-6" | 36'-5" | 31'-10" | 26'-10" | 33'-10" | 29'-6" | 24'-11" | 31'-10" | 27'-9" | 23'-5" | 30'-3" | 26'-5" | 22'-3" | 28'-11" | 25'-3" | 21'-4" |
| | 16 | | 58'-9" | 46'-8" | 40'-9" | 36'-5" | 31'-10" | 26'-10" | 33'-1" | 28'-11" | 24'-5" | 30'-9" | 26'-10" | 22'-8" | 28'-11" | 25'-3" | 21'-4" | 27'-5" | 24'-0" | 20'-3" | 26'-3" | 22'-11" | 19'-4" |
| | 24 | | 51'-4" | 40'-9" | 35'-7" | 31'-10" | 27'-9" | 23'-5" | 28'-11" | 25'-3" | 21'-4" | 26'-10" | 23'-5" | 19'-9" | 25'-3" | 22'-1" | 18'-7" | 24'-0" | 20'-11" | 17'-8" | 22'-11" | 20'-0" | 16'-11" |
| 800S137-331 | 12 | 33 | 36'-6"e | 34'-0"e | 29'-9"e | 21'-1"e | 21'-1"e | 19'-7"e | 18'-3"e | 18'-3"e | 17'-9"e | 16'-4"e | 16'-4"e | 16'-4"e | 14'-11"e | 14'-11"e | 14'-11"e | 13'-10"e | 13'-10"e | 13'-10"e | 12'-11"e | 12'-11"e | 12'-11"e |
| | 16 | | 31'-8"e | 30'-11"e | 27'-0"e | 18'-3"e | 18'-3"e | 17'-9"e | 15'-10"e | 15'-10"e | 15'-10"e | 14'-2"e | 14'-2"e | 14'-2"e | 12'-11"e | 12'-11"e | 12'-11"e | 11'-11"e | 11'-11"e | 11'-11"e | 11'-2"e | 11'-2"e | 11'-2"e |
| | 24 | | 25'-10"e | 25'-10"e | 23'-7"e | 14'-11"e | 14'-11"e | 14'-11"e | 12'-11"e | 12'-11"e | 12'-11"e | 11'-7"e | 11'-7"e | 11'-7"e | 10'-7"e | 10'-7"e | 10'-7"e | 9'-9"e | 9'-9"e | 9'-9"e | 9'-2"e | 9'-2"e | 9'-2"e |
| 800S137-43 | 12 | 33 | 47'-2" | 37'-5" | 32'-9" | 27'-9"e | 25'-7"e | 21'-7" | 24'-0"e | 23'-3"e | 19'-7"e | 21'-6"e | 21'-6"e | 18'-2"e | 19'-7"e | 19'-7"e | 17'-1"e | 18'-2"e | 18'-2"e | 16'-3"e | 17'-0"e | 17'-0"e | 15'-6"e |
| | 16 | | 41'-7" | 34'-0" | 29'-9" | 24'-0"e | 23'-3"e | 19'-7"e | 20'-10"e | 20'-10"e | 17'-9"e | 18'-7"e | 18'-7"e | 16'-6"e | 17'-0"e | 17'-0"e | 15'-6"e | 15'-9"e | 15'-9"e | 14'-9"e | 14'-9"e | 14'-9"e | 14'-1"e |
| | 24 | | 34'-0" | 29'-9" | 26'-0" | 19'-7"e | 19'-7"e | 17'-1"e | 17'-0"e | 17'-0"e | 15'-6"e | 15'-2"e | 15'-2"e | 14'-5"e | 13'-10"e | 13'-10"e | 13'-7"e | 12'-10"e | 12'-10"e | 12'-10"e | 12'-0"e | 12'-0"e | 12'-0"e |
| 800S137-54 | 12 | 33 | 51'-1" | 40'-6" | 35'-5" | 31'-8" | 27'-8" | 23'-4" | 27'-8" | 25'-2" | 21'-2" | 24'-9" | 23'-4" | 19'-8" | 22'-7"e | 21'-11"e | 18'-6" | 20'-11"e | 20'-10"e | 17'-7" | 19'-7"e | 19'-7"e | 16'-10"e |
| | 16 | | 46'-5" | 36'-10" | 32'-2" | 27'-8" | 25'-2" | 21'-2" | 24'-0" | 22'-10" | 19'-3" | 21'-5"e | 21'-2"e | 17'-10" | 19'-7"e | 19'-7"e | 16'-10"e | 18'-1"e | 18'-1"e | 16'-0"e | 16'-11"e | 16'-11"e | 15'-3"e |
| | 24 | | 39'-2" | 32'-2" | 28'-1" | 22'-7"e | 21'-11"e | 18'-6" | 19'-7"e | 19'-7"e | 16'-10"e | 17'-6"e | 17'-6"e | 15'-7"e | 16'-0"e | 16'-0"e | 14'-8"e | 14'-10"e | 14'-10"e | 13'-11"e | 13'-10"e | 13'-10"e | 13'-4"e |
| 800S137-54 | 12 | 50 | 50'-9" | 40'-3" | 35'-2" | 31'-5" | 27'-6" | 23'-2" | 28'-7" | 25'-0" | 21'-1" | 26'-6" | 23'-2" | 19'-7" | 25'-0" | 21'-10" | 18'-5" | 23'-9" | 20'-9" | 17'-6" | 22'-8" | 19'-10" | 16'-9" |
| | 16 | | 46'-1" | 36'-7" | 32'-0" | 28'-7" | 25'-0" | 21'-1" | 26'-0" | 22'-8" | 19'-2" | 24'-1" | 21'-1" | 17'-9" | 22'-8" | 19'-10" | 16'-9" | 21'-3"e | 18'-10" | 15'-10" | 19'-11"e | 18'-0" | 15'-2" |
| | 24 | | 40'-3" | 32'-0" | 27'-11" | 25'-0" | 21'-10" | 18'-5" | 22'-8" | 19'-10" | 16'-9" | 20'-7"e | 18'-5" | 15'-6" | 18'-9"e | 17'-4"e | 14'-7" | 17'-4"e | 16'-5"e | 13'-10" | 16'-3"e | 15'-9"e | 13'-3"e |
| 800S137-68 | 12 | 50 | 54'-10" | 43'-6" | 38'-0" | 34'-0" | 29'-8" | 25'-1" | 30'-11" | 27'-0" | 22'-9" | 28'-8" | 25'-1" | 21'-1" | 27'-0" | 23'-7" | 19'-11" | 25'-8" | 22'-5" | 18'-11" | 24'-6" | 21'-5" | 18'-1" |
| | 16 | | 49'-10" | 39'-7" | 34'-7" | 30'-11" | 27'-0" | 22'-9" | 28'-1" | 24'-6" | 20'-8" | 26'-1" | 22'-9" | 19'-2" | 24'-6" | 21'-5" | 18'-1" | 23'-3" | 20'-4" | 17'-2" | 22'-3" | 19'-5" | 16'-5" |
| | 24 | | 43'-6" | 34'-7" | 30'-2" | 27'-0" | 23'-7" | 19'-11" | 24'-6" | 21'-5" | 18'-1" | 22'-9" | 19'-11" | 16'-9" | 21'-5" | 18'-8" | 15'-9" | 20'-4" | 17'-9" | 15'-0" | 19'-0" | 17'-0" | 14'-4" |
| 800S137-97 | 12 | 50 | 60'-10" | 48'-4" | 42'-2" | 37'-9" | 32'-11" | 27'-10" | 34'-3" | 29'-11" | 25'-3" | 31'-10" | 27'-10" | 23'-5" | 29'-11" | 26'-2" | 22'-1" | 28'-5" | 24'-10" | 20'-11" | 27'-2" | 23'-9" | 20'-1" |
| | 16 | | 55'-4" | 43'-11" | 38'-4" | 34'-3" | 29'-11" | 25'-3" | 31'-2" | 27'-2" | 22'-11" | 28'-11" | 25'-3" | 21'-4" | 27'-2" | 23'-9" | 20'-1" | 25'-10" | 22'-7" | 19'-0" | 24'-9" | 21'-7" | 18'-3" |
| | 24 | | 48'-4" | 38'-4" | 33'-6" | 29'-11" | 26'-2" | 22'-1" | 27'-2" | 23'-9" | 20'-1" | 25'-3" | 22'-1" | 18'-7" | 23'-9" | 20'-9" | 17'-6" | 22'-7" | 19'-9" | 16'-8" | 21'-7" | 18'-10" | 15'-11" |
| 800S162-331 | 12 | 33 | 39'-1"e | 35'-5"e | 30'-11"e | 22'-7"e | 22'-7"e | 20'-5"e | 19'-6"e | 19'-6"e | 18'-6"e | 17'-6"e | 17'-6"e | 17'-2"e | 15'-11"e | 15'-11"e | 15'-11"e | 14'-9"e | 14'-9"e | 14'-9"e | 13'-10"e | 13'-10"e | 13'-10"e |
| | 16 | | 33'-10"e | 32'-2"e | 28'-1"e | 19'-6"e | 19'-6"e | 18'-6"e | 16'-11"e | 16'-11"e | 16'-10"e | 15'-2"e | 15'-2"e | 15'-2"e | 13'-10"e | 13'-10"e | 13'-10"e | 12'-9"e | 12'-9"e | 12'-9"e | 12'-0"e | 12'-0"e | 12'-0"e |
| | 24 | | 27'-8"e | 27'-8"e | 24'-7"e | 15'-11"e | 15'-11"e | 15'-11"e | 13'-10"e | 13'-10"e | 13'-10"e | 12'-4"e | 12'-4"e | 12'-4"e | 11'-3"e | 11'-3"e | 11'-3"e | 10'-5"e | 10'-5"e | 10'-5"e | 9'-6"e | 9'-6"e | 9'-6"e |
| 800S162-43 | 12 | 33 | 49'-1" | 38'-11" | 34'-0" | 29'-8"e | 26'-7"e | 22'-5" | 25'-8"e | 24'-2"e | 20'-4"e | 23'-0"e | 22'-5"e | 18'-11"e | 21'-0"e | 21'-0"e | 17'-9"e | 19'-5"e | 19'-5"e | 16'-11"e | 18'-2"e | 18'-2"e | 16'-2"e |
| | 16 | | 44'-6" | 35'-5" | 30'-11" | 25'-8"e | 24'-2"e | 20'-4"e | 22'-3"e | 21'-11"e | 18'-6"e | 19'-11"e | 19'-11"e | 17'-2"e | 18'-2"e | 18'-2"e | 16'-2"e | 16'-10"e | 16'-10"e | 15'-4"e | 15'-9"e | 15'-9"e | 14'-8"e |
| | 24 | | 36'-4" | 30'-11" | 27'-0" | 21'-0"e | 21'-0"e | 17'-9"e | 18'-2"e | 18'-2"e | 16'-2"e | 16'-3"e | 16'-3"e | 15'-0"e | 14'-10"e | 14'-10"e | 14'-1"e | 13'-9"e | 13'-9"e | 13'-5"e | 12'-10"e | 12'-10"e | 12'-10"e |
| 800S162-54 | 12 | 33 | 53'-1" | 42'-2" | 36'-10" | 32'-11" | 28'-9" | 24'-3" | 29'-6" | 26'-1" | 22'-0" | 26'-4"e | 24'-3" | 20'-5" | 24'-1"e | 22'-10"e | 19'-3" | 22'-3"e | 21'-8"e | 18'-3" | 20'-10"e | 20'-9"e | 17'-6"e |
| | 16 | | 48'-3" | 38'-3" | 33'-5" | 29'-6" | 26'-1" | 22'-0" | 25'-6"e | 23'-9" | 20'-0" | 22'-10"e | 22'-0"e | 18'-7" | 20'-10"e | 20'-9"e | 17'-6"e | 19'-4"e | 19'-4"e | 16'-7"e | 18'-1"e | 18'-1"e | 15'-11"e |
| | 24 | | 41'-8" | 33'-5" | 29'-3" | 24'-1"e | 22'-10"e | 19'-3" | 20'-10"e | 20'-9"e | 17'-6"e | 18'-8"e | 18'-8"e | 16'-3"e | 17'-0"e | 17'-0"e | 15'-3"e | 15'-9"e | 15'-9"e | 14'-6"e | 14'-9"e | 14'-9"e | 13'-11"e |
| 800S162-54 | 12 | 50 | 52'-9" | 41'-11" | 36'-7" | 32'-9" | 28'-7" | 24'-1" | 29'-9" | 26'-0" | 21'-11" | 27'-7" | 24'-1" | 20'-4" | 26'-0" | 22'-8" | 19'-2" | 24'-8" | 21'-7" | 18'-2" | 23'-7" | 20'-7" | 17'-5" |
| | 16 | | 47'-11" | 38'-1" | 33'-3" | 29'-9" | 26'-0" | 21'-11" | 27'-0" | 23'-7" | 19'-11" | 25'-1" | 21'-11" | 18'-6" | 23'-7" | 20'-7" | 17'-5" | 22'-5"e | 19'-7" | 16'-6" | 21'-3"e | 18'-9"e | 15'-9" |
| | 24 | | 41'-11" | 33'-3" | 29'-1" | 26'-0" | 22'-8" | 19'-2" | 23'-7" | 20'-7" | 17'-5" | 21'-11"e | 19'-2" | 16'-2" | 20'-0"e | 18'-0"e | 15'-2" | 18'-6"e | 17'-1"e | 14'-5"e | 17'-4"e | 16'-4"e | 13'-10"e |
| 800S162-68 | 12 | 50 | 57'-0" | 45'-3" | 39'-7" | 35'-4" | 30'-11" | 26'-1" | 32'-1" | 28'-1" | 23'-8" | 29'-10" | 26'-1" | 22'-0" | 28'-1" | 24'-6" | 20'-8" | 26'-8" | 23'-3" | 19'-8" | 25'-6" | 22'-3" | 18'-9" |
| | 16 | | 51'-10" | 41'-2" | 35'-11" | 32'-1" | 28'-1" | 23'-8" | 29'-2" | 25'-6" | 21'-6" | 27'-1" | 23'-8" | 19'-11" | 25'-6" | 22'-3" | 18'-9" | 24'-3" | 21'-2" | 17'-10" | 23'-2" | 20'-3" | 17'-1" |
| | 24 | | 45'-3" | 35'-11" | 31'-5" | 28'-1" | 24'-6" | 20'-8" | 25'-6" | 22'-3" | 18'-9" | 23'-8" | 20'-8" | 17'-5" | 22'-3" | 19'-5" | 16'-5" | 21'-2" | 18'-6" | 15'-7" | 20'-3" | 17'-8" | 14'-11" |
| 800S162-97 | 12 | 50 | 63'-5" | 50'-4" | 43'-11" | 39'-4" | 34'-4" | 28'-11" | 35'-8" | 31'-2" | 26'-4" | 33'-2" | 28'-11" | 24'-5" | 31'-2" | 27'-3" | 23'-0" | 29'-7" | 25'-11" | 21'-10" | 28'-4" | 24'-9" | 20'-11" |
| | 16 | | 57'-7" | 45'-9" | 39'-11" | 35'-8" | 31'-2" | 26'-4" | 32'-5" | 28'-4" | 23'-11" | 30'-1" | 26'-4" | 22'-2" | 28'-4" | 24'-9" | 20'-11" | 26'-11" | 23'-6" | 19'-10" | 25'-9" | 22'-6" | 19'-0" |
| | 24 | | 50'-4" | 39'-11" | 34'-11" | 31'-2" | 27'-3" | 23'-0" | 28'-4" | 24'-9" | 20'-11" | 26'-4" | 23'-0" | 19'-5" | 24'-9" | 21'-7" | 18'-3" | 23'-6" | 20'-6" | 17'-4" | 22'-6" | 19'-8" | 16'-7" |

See Curtain Wall Limiting Heights Table Notes

# Wall Height

| Stud Member | Spacing, in, oc | Fy, ksi | 5 psf | | | 15 psf | | | 20 psf | | | 25 psf | | | 30 psf | | | 35 psf | | | 40 psf | | |
|---|---|---|---|---|---|---|---|---|---|---|---|---|---|---|---|---|---|---|---|---|---|---|---|
| | | | L/120 | L/240 | L/360 | L/240 | L/360 | L/600 | L/240 | L/360 | L/600 | L/240 | L/360 | L/600 | L/240 | L/360 | L/600 | L/240 | L/360 | L/600 | L/240 | L/360 | L/600 |
| 800S162-118 | 12 | 50 | 67'-1" | 53'-3" | 46'-6" | 41'-7" | 36'-4" | 30'-8" | 37'-9" | 33'-0" | 27'-10" | 35'-1" | 30'-8" | 25'-10" | 33'-0" | 28'-10" | 24'-4" | 31'-4" | 27'-5" | 23'-1" | 30'-0" | 26'-2" | 22'-1" |
| | 16 | | 60'-11" | 48'-4" | 42'-3" | 37'-9" | 33'-0" | 27'-10" | 34'-4" | 30'-0" | 25'-3" | 31'-10" | 27'-10" | 23'-6" | 30'-0" | 26'-2" | 22'-1" | 28'-6" | 24'-11" | 21'-0" | 27'-3" | 23'-10" | 20'-1" |
| | 24 | | 53'-3" | 42'-3" | 36'-11" | 33'-0" | 28'-10" | 24'-4" | 30'-0" | 26'-2" | 22'-1" | 27'-10" | 24'-4" | 20'-6" | 26'-2" | 22'-11" | 19'-4" | 24'-11" | 21'-9" | 18'-4" | 23'-10" | 20'-9" | 17'-6" |
| 800S200-331 | 12 | 33 | 41'-9"e | 37'-9"e | 33'-0"e | 24'-1"e | 24'-1"e | 21'-8"e | 20'-10"e | 20'-10"e | 19'-9"e | 18'-8"e | 18'-8"e | 18'-4"e | 17'-0"e | 17'-0"e | 17'-0"e | 15'-9"e | 15'-9"e | 15'-9"e | 14'-9"e | 14'-9"e | 14'-9"e |
| | 16 | | 36'-2"e | 34'-3"e | 29'-11"e | 20'-10"e | 20'-10"e | 19'-9"e | 18'-1"e | 18'-1"e | 17'-11"e | 16'-2"e | 16'-2"e | 16'-2"e | 14'-9"e | 14'-9"e | 14'-9"e | 13'-8"e | 13'-8"e | 13'-8"e | 12'-9"e | 12'-9"e | 12'-9"e |
| | 24 | | 29'-6"e | 29'-6"e | 26'-2"e | 17'-0"e | 17'-0"e | 17'-0"e | 14'-9"e | 14'-9"e | 14'-9"e | 13'-2"e | 13'-2"e | 13'-2"e | 12'-1"e | 12'-1"e | 12'-1"e | 10'-10"e | 10'-10"e | 10'-10"e | 9'-6"e | 9'-6"e | 9'-6"e |
| 800S200-43 | 12 | 33 | 51'-10" | 41'-1" | 35'-11" | 32'-1"e | 28'-1"e | 23'-8" | 29'-2"e | 25'-6"e | 21'-6"e | 26'-1"e | 23'-8"e | 19'-11"e | 23'-9"e | 22'-3"e | 18'-9"e | 22'-0"e | 21'-2"e | 17'-10"e | 20'-7"e | 20'-3"e | 17'-1"e |
| | 16 | | 47'-1" | 37'-4" | 32'-8" | 29'-2"e | 25'-6"e | 21'-6"e | 25'-3"e | 23'-2"e | 19'-6"e | 22'-7"e | 21'-6"e | 18'-2"e | 20'-7"e | 20'-3"e | 17'-1"e | 19'-1"e | 19'-1"e | 16'-2"e | 17'-10"e | 17'-10"e | 15'-6"e |
| | 24 | | 41'-1"e | 32'-8" | 28'-6" | 23'-9"e | 22'-3"e | 18'-9"e | 20'-7"e | 20'-3"e | 17'-1"e | 18'-5"e | 18'-5"e | 15'-10"e | 16'-10"e | 16'-10"e | 14'-11"e | 15'-7"e | 15'-7"e | 14'-2"e | 14'-7"e | 14'-7"e | 13'-6"e |
| 800S200-54 | 12 | 33 | 55'-8" | 44'-2" | 38'-7" | 34'-6" | 30'-2" | 25'-5" | 31'-4" | 27'-5" | 23'-1" | 29'-1"e | 25'-5" | 21'-5" | 27'-5"e | 23'-11"e | 20'-2" | 26'-0"e | 22'-9"e | 19'-2"e | 24'-5"e | 21'-9"e | 18'-4"e |
| | 16 | | 50'-7" | 40'-2" | 35'-1" | 31'-4" | 27'-5" | 23'-1" | 28'-6"e | 24'-10"e | 21'-0" | 26'-5"e | 23'-1"e | 19'-6" | 24'-5"e | 21'-9"e | 18'-4"e | 22'-7"e | 20'-8"e | 17'-5"e | 21'-1"e | 19'-9"e | 16'-8"e |
| | 24 | | 44'-2" | 35'-1" | 30'-8" | 27'-5"e | 23'-11"e | 20'-2" | 24'-5"e | 21'-9"e | 18'-4"e | 21'-10"e | 20'-2"e | 17'-0"e | 19'-11"e | 19'-0"e | 16'-0"e | 18'-5"e | 18'-0"e | 15'-2"e | 17'-3"e | 17'-3"e | 14'-7"e |
| 800S200-54 | 12 | 50 | 55'-8" | 44'-2" | 38'-7" | 34'-6" | 30'-2" | 25'-5" | 31'-4" | 27'-5" | 23'-1" | 29'-1" | 25'-5" | 21'-5" | 27'-5" | 23'-11" | 20'-2" | 26'-0" | 22'-9" | 19'-2" | 24'-10"e | 21'-9" | 18'-4" |
| | 16 | | 50'-7" | 40'-2" | 35'-1" | 31'-4" | 27'-5" | 23'-1" | 28'-6" | 24'-10" | 21'-0" | 26'-5" | 23'-1" | 19'-6" | 24'-10"e | 21'-9" | 18'-4" | 23'-8"e | 20'-8" | 17'-5" | 22'-7"e | 19'-9"e | 16'-8" |
| | 24 | | 44'-2" | 35'-1" | 30'-8" | 27'-5" | 23'-11" | 20'-2" | 24'-10"e | 21'-9" | 18'-4" | 23'-1"e | 20'-2"e | 17'-0" | 21'-9"e | 19'-0"e | 16'-0" | 20'-7"e | 18'-0"e | 15'-2"e | 19'-3"e | 17'-3"e | 14'-7"e |
| 800S200-68 | 12 | 50 | 59'-9" | 47'-5" | 41'-5" | 37'-1" | 32'-4" | 27'-4" | 33'-8" | 29'-5" | 24'-10" | 31'-3" | 27'-4" | 23'-0" | 29'-5" | 25'-8" | 21'-8" | 27'-11" | 24'-5" | 20'-7" | 26'-9" | 23'-4" | 19'-8" |
| | 16 | | 54'-4" | 43'-1" | 37'-8" | 33'-8" | 29'-5" | 24'-10" | 30'-7" | 26'-9" | 22'-6" | 28'-5" | 24'-10" | 20'-11" | 26'-9" | 23'-4" | 19'-8" | 25'-4" | 22'-2" | 18'-8" | 24'-3" | 21'-2" | 17'-11" |
| | 24 | | 47'-5" | 37'-8" | 32'-11" | 29'-5" | 25'-8" | 21'-8" | 26'-9" | 23'-4" | 19'-8" | 24'-10" | 21'-8" | 18'-3" | 23'-4" | 20'-5" | 17'-2" | 22'-2" | 19'-4" | 16'-4" | 21'-2"e | 18'-6" | 15'-7" |
| 800S200-97 | 12 | 50 | 66'-6" | 52'-9" | 46'-1" | 41'-2" | 36'-0" | 30'-4" | 37'-5" | 32'-8" | 27'-7" | 34'-9" | 30'-4" | 25'-7" | 32'-8" | 28'-7" | 24'-1" | 31'-1" | 27'-2" | 22'-11" | 29'-9" | 26'-0" | 21'-11" |
| | 16 | | 60'-5" | 47'-11" | 41'-11" | 37'-5" | 32'-8" | 27'-7" | 34'-0" | 29'-9" | 25'-1" | 31'-7" | 27'-7" | 23'-3" | 29'-9" | 26'-0" | 21'-11" | 28'-3" | 24'-8" | 20'-10" | 27'-0" | 23'-7" | 19'-11" |
| | 24 | | 52'-9" | 41'-11" | 36'-7" | 32'-8" | 28'-7" | 24'-1" | 29'-9" | 26'-0" | 21'-11" | 27'-7" | 24'-1" | 20'-4" | 26'-0" | 22'-8" | 19'-2" | 24'-8" | 21'-6" | 18'-2" | 23'-7" | 20'-7" | 17'-5" |
| 800S200-118 | 12 | 50 | 70'-5" | 55'-11" | 48'-10" | 43'-8" | 38'-2" | 32'-2" | 39'-8" | 34'-8" | 29'-3" | 36'-10" | 32'-2" | 27'-2" | 34'-8" | 30'-3" | 25'-6" | 32'-11" | 28'-9" | 24'-3" | 31'-6" | 27'-6" | 23'-2" |
| | 16 | | 64'-0" | 50'-9" | 44'-4" | 39'-8" | 34'-8" | 29'-3" | 36'-0" | 31'-6" | 26'-7" | 33'-5" | 29'-3" | 24'-8" | 31'-6" | 27'-6" | 23'-2" | 29'-11" | 26'-1" | 22'-0" | 28'-7" | 25'-0" | 21'-1" |
| | 24 | | 55'-11" | 44'-4" | 38'-9" | 34'-8" | 30'-3" | 25'-6" | 31'-6" | 27'-6" | 23'-2" | 29'-3" | 25'-6" | 21'-6" | 27'-6" | 24'-0" | 20'-3" | 26'-1" | 22'-10" | 19'-3" | 25'-0" | 21'-10" | 18'-5" |
| 800S250-43 | 12 | 33 | 54'-0" | 42'-11" | 37'-6" | 33'-6"e | 29'-3"e | 24'-8" | 29'-2"e | 26'-7"e | 22'-5"e | 26'-1"e | 24'-8"e | 20'-10"e | 23'-10"e | 23'-3"e | 19'-7"e | 22'-1"e | 22'-1"e | 18'-7"e | 20'-8"e | 20'-8"e | 17'-10"e |
| | 16 | | 49'-1" | 39'-0" | 34'-0" | 29'-2"e | 26'-7"e | 22'-5"e | 25'-3"e | 24'-2"e | 20'-4"e | 22'-7"e | 22'-5"e | 18'-11"e | 20'-8"e | 20'-8"e | 17'-10"e | 19'-1"e | 19'-1"e | 16'-11"e | 17'-11"e | 17'-11"e | 16'-2"e |
| | 24 | | 41'-3"e | 34'-0" | 29'-9" | 23'-10"e | 23'-3"e | 19'-7"e | 20'-8"e | 20'-8"e | 17'-10"e | 18'-6"e | 18'-6"e | 16'-6"e | 16'-10"e | 16'-10"e | 15'-7"e | 15'-7"e | 15'-7"e | 14'-9"e | 14'-7"e | 14'-7"e | 14'-1"e |
| 800S250-54 | 12 | 33 | 58'-1" | 46'-1" | 40'-3" | 36'-0" | 31'-5" | 26'-6" | 32'-8"e | 28'-7" | 24'-1" | 29'-11"e | 26'-6"e | 22'-4" | 27'-4"e | 24'-11"e | 21'-1" | 25'-4"e | 23'-8"e | 20'-0"e | 23'-8"e | 22'-8"e | 19'-1"e |
| | 16 | | 52'-9" | 41'-10" | 36'-7" | 32'-8"e | 28'-7" | 24'-1" | 29'-0"e | 25'-11"e | 21'-11" | 25'-11"e | 24'-1"e | 20'-4"e | 23'-8"e | 22'-8"e | 19'-1"e | 21'-11"e | 21'-6"e | 18'-2"e | 20'-6"e | 20'-6"e | 17'-4"e |
| | 24 | | 46'-1" | 36'-7" | 31'-11" | 27'-4"e | 24'-11"e | 21'-1" | 23'-8"e | 22'-8"e | 19'-1"e | 21'-2"e | 21'-1"e | 17'-9"e | 19'-4"e | 19'-4"e | 16'-8"e | 17'-11"e | 17'-11"e | 15'-10"e | 16'-9"e | 16'-9"e | 15'-2"e |
| 800S250-54 | 12 | 50 | 57'-11" | 45'-11" | 40'-2" | 35'-11" | 31'-4" | 26'-5" | 32'-7" | 28'-6" | 24'-0" | 30'-3" | 26'-5" | 22'-4" | 28'-6" | 24'-11" | 21'-0" | 27'-1" | 23'-8" | 19'-11" | 25'-10"e | 22'-7" | 19'-1" |
| | 16 | | 52'-7" | 41'-9" | 36'-6" | 32'-7" | 28'-6" | 24'-0" | 29'-7" | 25'-10" | 21'-10" | 27'-6" | 24'-0" | 20'-3" | 25'-10"e | 22'-7" | 19'-1" | 24'-7"e | 21'-6"e | 18'-1" | 23'-6"e | 20'-6"e | 17'-4" |
| | 24 | | 45'-11" | 36'-6" | 31'-10" | 28'-6" | 24'-11" | 21'-0" | 25'-10"e | 22'-7" | 19'-1" | 24'-0"e | 21'-0"e | 17'-8" | 22'-3"e | 19'-9"e | 16'-8"e | 20'-7"e | 18'-9"e | 15'-10"e | 19'-3"e | 17'-11"e | 15'-2"e |
| 800S250-68 | 12 | 50 | 62'-5" | 49'-6" | 43'-3" | 38'-8" | 33'-9" | 28'-6" | 35'-2" | 30'-8" | 25'-11" | 32'-7" | 28'-6" | 24'-0" | 30'-8" | 26'-10" | 22'-7" | 29'-2" | 25'-6" | 21'-6" | 27'-11" | 24'-4" | 20'-7" |
| | 16 | | 56'-8" | 45'-0" | 39'-4" | 35'-2" | 30'-8" | 25'-11" | 31'-11" | 27'-11" | 23'-6" | 29'-8" | 25'-11" | 21'-10" | 27'-11" | 24'-4" | 20'-7" | 26'-6" | 23'-2" | 19'-6" | 25'-4" | 22'-2" | 18'-8" |
| | 24 | | 49'-6" | 39'-4" | 34'-4" | 30'-8" | 26'-10" | 22'-7" | 27'-11" | 24'-4" | 20'-7" | 25'-11" | 22'-7" | 19'-1" | 24'-4" | 21'-3" | 17'-11" | 23'-2" | 20'-3" | 17'-1" | 22'-2"e | 19'-4" | 16'-4" |
| 800S250-97 | 12 | 50 | 69'-6" | 55'-2" | 48'-2" | 43'-1" | 37'-7" | 31'-9" | 39'-2" | 34'-2" | 28'-10" | 36'-4" | 31'-9" | 26'-9" | 34'-2" | 29'-10" | 25'-2" | 32'-6" | 28'-4" | 23'-11" | 31'-1" | 27'-2" | 22'-11" |
| | 16 | | 63'-2" | 50'-1" | 43'-9" | 39'-2" | 34'-2" | 28'-10" | 35'-7" | 31'-1" | 26'-2" | 33'-0" | 28'-10" | 24'-4" | 31'-1" | 27'-2" | 22'-11" | 29'-6" | 25'-9" | 21'-9" | 28'-3" | 24'-8" | 20'-9" |
| | 24 | | 55'-2" | 43'-9" | 38'-3" | 34'-2" | 29'-10" | 25'-2" | 31'-1" | 27'-2" | 22'-11" | 28'-10" | 25'-2" | 21'-3" | 27'-2" | 23'-8" | 20'-0" | 25'-9" | 22'-6" | 19'-0" | 24'-8" | 21'-6" | 18'-2" |
| 800S250-118 | 12 | 50 | 73'-8" | 58'-6" | 51'-1" | 45'-8" | 39'-11" | 33'-8" | 41'-6" | 36'-3" | 30'-7" | 38'-6" | 33'-8" | 28'-5" | 36'-3" | 31'-8" | 26'-8" | 34'-5" | 30'-1" | 25'-4" | 32'-11" | 28'-9" | 24'-3" |
| | 16 | | 66'-11" | 53'-2" | 46'-5" | 41'-6" | 36'-3" | 30'-7" | 37'-8" | 32'-11" | 27'-9" | 35'-0" | 30'-7" | 25'-9" | 32'-11" | 28'-9" | 24'-3" | 31'-3" | 27'-4" | 23'-1" | 29'-11" | 26'-2" | 22'-1" |
| | 24 | | 58'-6" | 46'-5" | 40'-7" | 36'-3" | 31'-8" | 26'-8" | 32'-11" | 28'-9" | 24'-3" | 30'-7" | 26'-8" | 22'-6" | 28'-9" | 25'-2" | 21'-2" | 27'-4" | 23'-10" | 20'-2" | 26'-2" | 22'-10" | 19'-3" |
| 800S300-54 | 12 | 50 | 59'-2" | 47'-0" | 41'-0" | 36'-8" | 32'-1" | 27'-0" | 33'-4" | 29'-1" | 24'-7" | 30'-11" | 27'-0" | 22'-10" | 29'-1" | 25'-5" | 21'-5" | 27'-8" | 24'-2" | 20'-5" | 26'-5"e | 23'-1" | 19'-6" |
| | 16 | | 53'-9" | 42'-8" | 37'-3" | 33'-4" | 29'-1" | 24'-7" | 30'-3" | 26'-5" | 22'-4" | 28'-1" | 24'-7" | 20'-9" | 26'-5"e | 23'-1" | 19'-6" | 25'-2"e | 21'-11"e | 18'-6" | 23'-7"e | 21'-0"e | 17'-8" |
| | 24 | | 47'-0" | 37'-3" | 32'-7" | 29'-1" | 25'-5" | 21'-5" | 26'-5"e | 23'-1" | 19'-6" | 24'-4"e | 21'-5"e | 18'-1" | 22'-3"e | 20'-2"e | 17'-0"e | 20'-7"e | 19'-2"e | 16'-2"e | 19'-3"e | 18'-4"e | 15'-6"e |
| 800S300-68 | 12 | 50 | 64'-3" | 51'-0" | 44'-7" | 39'-10" | 34'-10" | 29'-4" | 36'-2" | 31'-7" | 26'-8" | 33'-7" | 29'-4" | 24'-9" | 31'-7" | 27'-7" | 23'-4" | 30'-0" | 26'-3" | 22'-2" | 28'-9" | 25'-1" | 21'-2" |
| | 16 | | 58'-5" | 46'-4" | 40'-6" | 36'-2" | 31'-7" | 26'-8" | 32'-11" | 28'-9" | 24'-3" | 30'-6" | 26'-8" | 22'-6" | 28'-9" | 25'-1" | 21'-2" | 27'-3" | 23'-10" | 20'-1" | 26'-1" | 22'-10" | 19'-3" |
| | 24 | | 51'-0" | 40'-6" | 35'-4" | 31'-7" | 27'-7" | 23'-4" | 28'-9" | 25'-1" | 21'-2" | 26'-8" | 23'-4" | 19'-8" | 25'-1" | 21'-11" | 18'-6" | 23'-10" | 20'-10" | 17'-7" | 22'-10"e | 19'-11" | 16'-10" |
| 800S300-97 | 12 | 50 | 71'-11" | 57'-1" | 49'-10" | 44'-7" | 38'-11" | 32'-10" | 40'-6" | 35'-5" | 29'-10" | 37'-7" | 32'-10" | 27'-8" | 35'-5" | 30'-11" | 26'-1" | 33'-7" | 29'-4" | 24'-9" | 32'-2" | 28'-1" | 23'-8" |
| | 16 | | 65'-4" | 51'-10" | 45'-4" | 40'-6" | 35'-5" | 29'-10" | 36'-10" | 32'-2" | 27'-1" | 34'-2" | 29'-10" | 25'-2" | 32'-2" | 28'-1" | 23'-8" | 30'-6" | 26'-8" | 22'-6" | 29'-2" | 25'-6" | 21'-6" |
| 800S300-97 | 24 | 50 | 57'-1" | 45'-4" | 39'-7" | 35'-5" | 30'-11" | 26'-1" | 32'-2" | 28'-1" | 23'-8" | 29'-10" | 26'-1" | 22'-0" | 28'-1" | 24'-6" | 20'-8" | 26'-8" | 23'-4" | 19'-8" | 25'-6" | 22'-3" | 18'-10" |
| 800S300-118 | 12 | 50 | 76'-8" | 60'-10" | 53'-2" | 47'-6" | 41'-6" | 35'-0" | 43'-2" | 37'-8" | 31'-10" | 40'-1" | 35'-0" | 29'-6" | 37'-8" | 32'-11" | 27'-9" | 35'-10" | 31'-3" | 26'-5" | 34'-3" | 29'-11" | 25'-3" |
| | 16 | | 69'-8" | 55'-3" | 48'-3" | 43'-2" | 37'-8" | 31'-10" | 39'-3" | 34'-3" | 28'-11" | 36'-5" | 31'-10" | 26'-10" | 34'-3" | 29'-11" | 25'-3" | 32'-7" | 28'-5" | 24'-0" | 31'-2" | 27'-2" | 22'-11" |
| | 24 | | 60'-10" | 48'-3" | 42'-2" | 37'-8" | 32'-11" | 27'-9" | 34'-3" | 29'-11" | 25'-3" | 31'-10" | 27'-9" | 23'-5" | 29'-11" | 26'-2" | 22'-1" | 28'-5" | 24'-10" | 20'-11" | 27'-2" | 23'-9" | 20'-0" |
| 800S350-54 | 12 | 33 | 62'-11" | 49'-11" | 43'-7" | 39'-0" | 34'-1" | 28'-9" | 35'-5"e | 30'-11" | 26'-1" | 32'-11"e | 28'-9"e | 24'-3" | 30'-5"e | 27'-0"e | 22'-10"e | 28'-2"e | 25'-8"e | 21'-8"e | 26'-4"e | 24'-7"e | 20'-9"e |
| | 16 | | 57'-2" | 45'-4" | 39'-7" | 35'-5"e | 30'-11" | 26'-1" | 32'-2"e | 28'-1"e | 23'-9" | 28'-11"e | 26'-1"e | 22'-0"e | 26'-4"e | 24'-7"e | 20'-9"e | 24'-5"e | 23'-4"e | 19'-8"e | 22'-10"e | 22'-4"e | 18'-10"e |
| | 24 | | 49'-11" | 39'-7" | 34'-7" | 30'-5"e | 27'-0"e | 22'-10"e | 26'-4"e | 24'-7"e | 20'-9"e | 23'-7"e | 22'-10"e | 19'-3"e | 21'-6"e | 21'-5"e | 18'-1"e | 19'-11"e | 19'-11"e | 17'-2"e | 18'-8"e | 18'-8"e | 16'-5"e |

See Curtain Wall Limiting Heights Table Notes

## Wall Height

| Stud Member | Spacing, in, oc | Fy, ksi | 5 psf | | | 15 psf | | | 20 psf | | | 25 psf | | | 30 psf | | | 35 psf | | | 40 psf | | |
|---|---|---|---|---|---|---|---|---|---|---|---|---|---|---|---|---|---|---|---|---|---|---|---|
| | | | L/120 | L/240 | L/360 | L/240 | L/360 | L/600 | L/240 | L/360 | L/600 | L/240 | L/360 | L/600 | L/240 | L/360 | L/600 | L/240 | L/360 | L/600 | L/240 | L/360 | L/600 |
| 800S350-54 | 12 | 50 | 62'-4" | 49'-5" | 43'-2" | 38'-7" | 33'-9" | 28'-5" | 35'-1" | 30'-8" | 25'-10" | 32'-7" | 28'-5" | 24'-0" | 30'-8" | 26'-9" | 22'-7" | 29'-1"e | 25'-5" | 21'-5" | 27'-10"e | 24'-4" | 20'-6" |
| | 16 | | 56'-7" | 44'-11" | 39'-3" | 35'-1" | 30'-8" | 25'-10" | 31'-10" | 27'-10" | 23'-6" | 29'-7" | 25'-10" | 21'-10" | 27'-10"e | 24'-4" | 20'-6" | 26'-5"e | 23'-1"e | 19'-6" | 25'-4"e | 22'-1"e | 18'-8"e |
| | 24 | | 49'-5" | 39'-3" | 34'-3" | 30'-8" | 26'-9" | 22'-7" | 27'-10"e | 24'-4" | 20'-6" | 25'-10"e | 22'-7"e | 19'-1" | 24'-4"e | 21'-3"e | 17'-11"e | 22'-10"e | 20'-2"e | 17'-0"e | 21'-4"e | 19'-4"e | 16'-3"e |
| 800S350-68 | 12 | 50 | 67'-11" | 53'-10" | 47'-1" | 42'-1" | 36'-9" | 31'-0" | 38'-3" | 33'-5" | 28'-2" | 35'-6" | 31'-0" | 26'-2" | 33'-5" | 29'-2" | 24'-7" | 31'-9" | 27'-9" | 23'-4" | 30'-4" | 26'-6" | 22'-4" |
| | 16 | | 61'-8" | 48'-11" | 42'-9" | 38'-3" | 33'-5" | 28'-2" | 34'-9" | 30'-4" | 25'-7" | 32'-3" | 28'-2" | 23'-9" | 30'-4" | 26'-6" | 22'-4" | 28'-10" | 25'-2" | 21'-3" | 27'-7" | 24'-1" | 20'-4" |
| | 24 | | 53'-10" | 42'-9" | 37'-4" | 33'-5" | 29'-2" | 24'-7" | 30'-4" | 26'-6" | 22'-4" | 28'-2" | 24'-7" | 20'-9" | 26'-6" | 23'-2" | 19'-6" | 25'-2"e | 22'-0" | 18'-7" | 24'-1"e | 21'-0" | 17'-9" |
| 800S350-97 | 12 | 50 | 76'-0" | 60'-4" | 52'-8" | 47'-1" | 41'-2" | 34'-8" | 42'-10" | 37'-5" | 31'-6" | 39'-9" | 34'-8" | 29'-3" | 37'-5" | 32'-8" | 27'-7" | 35'-6" | 31'-0" | 26'-2" | 34'-0" | 29'-8" | 25'-0" |
| | 16 | | 69'-1" | 54'-10" | 47'-11" | 42'-10" | 37'-5" | 31'-6" | 38'-11" | 34'-0" | 28'-8" | 36'-1" | 31'-6" | 26'-7" | 34'-0" | 29'-8" | 25'-0" | 32'-3" | 28'-2" | 23'-9" | 30'-10" | 27'-0" | 22'-9" |
| | 24 | | 60'-4" | 47'-11" | 41'-10" | 37'-5" | 32'-8" | 27'-7" | 34'-0" | 29'-8" | 25'-0" | 31'-6" | 27'-7" | 23'-3" | 29'-8" | 25'-11" | 21'-10" | 28'-2" | 24'-7" | 20'-9" | 27'-0" | 23'-7" | 19'-10" |
| 800S350-118 | 12 | 50 | 80'-8" | 64'-1" | 56'-0" | 50'-0" | 43'-8" | 36'-10" | 45'-5" | 39'-8" | 33'-6" | 42'-2" | 36'-10" | 31'-1" | 39'-8" | 34'-8" | 29'-3" | 37'-9" | 32'-11" | 27'-9" | 36'-1" | 31'-6" | 26'-7" |
| | 16 | | 73'-4" | 58'-2" | 50'-10" | 45'-5" | 39'-8" | 33'-6" | 41'-4" | 36'-1" | 30'-5" | 38'-4" | 33'-6" | 28'-3" | 36'-1" | 31'-6" | 26'-7" | 34'-3" | 29'-11" | 25'-3" | 32'-9" | 28'-8" | 24'-2" |
| | 24 | | 64'-1" | 50'-10" | 44'-5" | 39'-8" | 34'-8" | 29'-3" | 36'-1" | 31'-6" | 26'-7" | 33'-6" | 29'-3" | 24'-8" | 31'-6" | 27'-6" | 23'-3" | 29'-11" | 26'-2" | 22'-1" | 28'-8" | 25'-0" | 21'-1" |

See Curtain Wall Limiting Heights Table Notes



# Combined Axial and Lateral Load Tables

## Combined Axial and Lateral Load Table Notes

1. Allowable axial loads listed in kips (1 kip = 1000 pounds).
2. Allowable axial loads determined in accordance with AISI S240-20, assuming that all axial loads pass through the geometric center of the section.
3. Listed lateral pressures and axial loads have not been modified for load combinations or allowable stress increases based on wind/earthquake or multiple transient loads.
4. Allowable axial loads based on lateral and torsional bracing at a maximum spacing of 4 feet on center.
5. The 5 psf live load has not been reduced for deflection checks. For 15 psf or higher wind pressure, read the note below.

   IBC 2021/ASCE 7-16: Due to the change in the model building codes, design wind pressures determined using IBC 2021/ASCE 7-16 or later are strength level loads (LRFD) in comparison to those determined in some earlier IBC codes which were service level loads (ASD). The load/span tables that follow are based on service level (ASD) wind loads. Therefore, to properly use the load/span tables in this catalog, multiply the IBC 2021/ASCE 7-16 design wind pressures by 0.6 (Reference Section 2.4 ASCE 7-16) prior to entering the load/span tables.

   Example:
   - ASCE 7-16 Calculated Design Wind Pressure = 25 psf (Strength level loads, LRFD)
   - Convert to service level loads (ASD) = 25 psf x 0.6 = 15 psf
   - Use 15 psf as the Pressure Value used in this Table to determine the member span

   Any Other Building Code: The load/span tables that follow are based on service level (ASD) wind loads. If the wind load being used meets this criterion, it does not need to be modified prior to using the tables.
6. Studs are assumed to be adequately braced at a maximum spacing of Lu to develop full allowable moment, Ma.
7. End supports have not been checked for web crippling. Refer web crippling capacity tables.
8. All tables are based on simple (single) span.
9. Cells marked with an " * " have h/t>200, thus require bearing stiffeners. Cells are left blank when h/t>260.
10. Cells marked with an a, b, c, d, e or f meets L/720, L/600, L/480, L/360, L/240, or L/120 respectively. Blank cells do not meet L/120.
11. Stud distortional buckling moment based on assumed Kφ = 0
12. Moment of inertia for deflection is optimized based on the maximum moment at service loads for the listed spans; therefore span values may be greater than spans based on effective moment of inertia listed in section property tables

## 5 psf Lateral Load (Interior Walls Only)

| Wall Height (ft) | Spacing (in.) o.c. | 362S137-(mils) | | | | 362S162-(mils) | | | | | 362S200-(mils) | | | | | 362S250-(mils) | | | |
|---|---|---|---|---|---|---|---|---|---|---|---|---|---|---|---|---|---|---|---|
| | | 33 ksi | | 50 ksi | | 33 ksi | | 50 ksi | | | 33 ksi | | 50 ksi | | | 33 ksi | 50 ksi | | |
| | | 33 | 43 | 54 | 68 | 33 | 43 | 54 | 68 | 97 | 97 | 33 | 54 | 68 | 97 | 43 | 54 | 68 | 97 |
| 8 | 12 | 1.46 a | 2.08 a | 3.11 a | 4.05 a | 1.86 a | 2.52 a | 3.98 a | 5.11 a | 7.48 a | 2.26 a | 3.26 a | 5.05 a | 7.99 a | 9.2 a | 3.72 a | 5.74 a | 7.52 a | 10.57 a |
| | 16 | 1.4 a | 2.02 a | 3.07 a | 4.01 a | 1.8 a | 2.46 a | 3.93 a | 5.07 a | 7.43 a | 2.2 a | 3.2 a | 5 a | 7.92 a | 9.15 a | 3.65 a | 5.68 a | 7.46 a | 10.51 a |
| | 24 | 1.29 a | 1.91 a | 2.98 a | 3.93 a | 1.68 a | 2.35 a | 3.84 a | 4.98 a | 7.35 a | 2.06 a | 3.07 a | 4.88 a | 7.79 a | 9.06 a | 3.51 a | 5.55 a | 7.34 a | 10.41 a |
| 9 | 12 | 1.38 a | 1.98 a | 2.93 a | 3.82 a | 1.75 a | 2.38 a | 3.74 a | 4.78 a | 6.97 a | 2.14 a | 3.09 a | 4.72 a | 7.48 a | 8.54 a | 3.56 a | 5.44 a | 7 a | 9.83 a |
| | 16 | 1.31 a | 1.91 a | 2.88 a | 3.78 a | 1.68 a | 2.31 a | 3.68 a | 4.73 a | 6.92 a | 2.06 a | 3.01 a | 4.65 a | 7.4 a | 8.49 a | 3.47 a | 5.36 a | 6.93 a | 9.77 a |
| | 24 | 1.17 a | 1.78 a | 2.77 a | 3.68 a | 1.53 a | 2.17 a | 3.56 a | 4.63 a | 6.81 a | 1.9 a | 2.85 a | 4.52 a | 7.24 a | 8.38 a | 3.3 a | 5.22 a | 6.79 a | 9.64 a |
| 10 | 12 | 1.28 a | 1.87 a | 2.72 a | 3.55 a | 1.63 a | 2.09 a | 3.47 a | 4.42 a | 6.41 a | 2.01 a | 2.9 a | 4.35 a | 6.88 a | 7.83 a | 3.38 a | 5.1 a | 6.43 a | 9.05 a |
| | 16 | 1.2 a | 1.79 a | 2.66 a | 3.5 a | 1.54 a | 2.02 a | 3.4 a | 4.36 a | 6.35 a | 1.91 a | 2.81 a | 4.27 a | 6.79 a | 7.77 a | 3.28 a | 5.01 a | 6.35 a | 8.97 a |
| | 24 | 1.04 a | 1.62 a | 2.54 a | 3.39 a | 1.37 a | 1.86 a | 3.26 a | 4.24 a | 6.23 a | 1.72 a | 2.62 a | 4.12 a | 6.61 a | 7.64 a | 3.08 a | 4.84 a | 6.2 a | 8.83 a |
| 12 | 12 | 1.08 a | 1.6 a | 2.29 a | 2.98 a | 1.37 a | 1.99 a | 2.84 a | 3.62 a | 5.2 a | 1.71 a | 2.48 a | 3.54 a | 5.58 a | 6.33 a | 2.91 a | 4.17 a | 5.25 a | 7.39 a |
| | 16 | 0.97 b | 1.5 a | 2.21 a | 2.91 a | 1.25 a | 1.88 a | 2.76 a | 3.55 a | 5.13 a | 1.59 a | 2.36 a | 3.45 a | 5.48 a | 6.26 a | 2.78 a | 4.07 a | 5.16 a | 7.3 a |
| | 24 | 0.76 d | 1.28 c | 2.05 b | 2.78 a | 1.03 c | 1.66 b | 2.59 a | 3.41 a | 4.99 a | 1.33 c | 2.13 a | 3.27 a | 5.27 a | 6.11 a | 2.52 a | 3.86 a | 4.97 a | 7.13 a |
| 14 | 12 | 0.85 c | 1.31 b | 1.86 a | 2.43 a | 1.09 b | 1.63 a | 2.28 a | 2.93 a | 4.17 a | 1.38 a | 2.05 a | 2.82 a | 4.45 a | 5.08 a | 2.42 a | 3.33 a | 4.22 a | 5.95 a |
| | 16 | 0.72 d | 1.18 c | 1.77 b | 2.36 a | 0.95 d | 1.5 b | 2.19 a | 2.85 a | 4.09 a | 1.23 c | 1.91 b | 2.72 a | 4.33 a | 4.99 a | 2.26 a | 3.22 a | 4.11 a | 5.86 a |
| | 24 | 0.47 e | 0.93 e | 1.59 d | 2.21 c | 0.69 e | 1.23 d | 2 c | 2.68 b | 3.93 a | 0.93 d | 1.63 d | 2.52 c | 4.1 a | 4.83 a | 1.95 c | 2.99 b | 3.9 a | 5.66 a |
| 16 | 12 | 0.63 d | 1.01 d | 1.49 c | 1.96 b | 0.82 d | 1.28 c | 1.82 b | 2.35 a | 3.35 a | 1.05 c | 1.62 b | 2.25 a | 3.56 a | 4.09 a | 1.93 a | 2.66 a | 3.4 a | 4.82 a |
| | 16 | 0.49 e | 0.87 e | 1.39 d | 1.88 c | 0.67 e | 1.13 d | 1.72 c | 2.27 b | 3.26 a | 0.88 d | 1.47 c | 2.14 c | 3.43 a | 4 a | 1.76 c | 2.54 b | 3.28 a | 4.72 a |
| | 24 | 0.2 f | 0.59 f | 1.2 e | 1.72 e | 0.37 f | 0.84 e | 1.52 e | 2.09 d | 3.1 c | 0.55 e | 1.16 e | 1.92 d | 3.18 c | 3.83 b | 1.41 d | 2.29 d | 3.06 c | 4.51 a |

## 5 psf Lateral Load (Interior Walls Only)

| Wall Height (ft) | Spacing (in.) o.c. | 362S300-(mils) | | | 600S137-(mils) | | | | | 600S162-(mils) | | | | | |
|---|---|---|---|---|---|---|---|---|---|---|---|---|---|---|---|
| | | 50 ksi | | | 33 ksi | | 50 ksi | | | 33 ksi | | 50 ksi | | | |
| | | 54 | 68 | 97 | 33 | 43 | 54 | 68 | 97 | 33 | 43 | 54 | 68 | 97 | 118 |
| 8 | 12 | 5.79 a | 8.01 a | 11.82 a | 1.77 a | 2.51 a | 3.8 a | 5.03 a | 7.52 a | 2.44 a | 3.4 a | 5.59 a | 7.42 a | 11.35 a | 14.19 a |
| | 16 | 5.73 a | 7.95 a | 11.76 a | 1.74 a | 2.47 a | 3.77 a | 5 a | 7.5 a | 2.4 a | 3.37 a | 5.56 a | 7.39 a | 11.32 a | 14.16 a |
| | 24 | 5.61 a | 7.83 a | 11.65 a | 1.67 a | 2.41 a | 3.71 a | 4.95 a | 7.45 a | 2.33 a | 3.3 a | 5.49 a | 7.33 a | 11.25 a | 14.09 a |
| 9 | 12 | 5.49 a | 7.51 a | 11.15 a | 1.75 a | 2.48 a | 3.77 a | 5 a | 7.5 a | 2.4 a | 3.37 a | 5.57 a | 7.4 a | 11.32 a | 14.17 a |
| | 16 | 5.42 a | 7.44 a | 11.09 a | 1.7 a | 2.44 a | 3.74 a | 4.97 a | 7.47 a | 2.35 a | 3.33 a | 5.52 a | 7.36 a | 11.28 a | 14.13 a |
| | 24 | 5.28 a | 7.29 a | 10.96 a | 1.61 a | 2.36 a | 3.67 a | 4.9 a | 7.41 a | 2.26 a | 3.24 a | 5.44 a | 7.28 a | 11.2 a | 14.04 a |
| 10 | 12 | 5.17 a | 6.99 a | 10.28 a | 1.71 a | 2.45 a | 3.75 a | 4.98 a | 7.48 a | 2.35 a | 3.32 a | 5.52 a | 7.37 a | 11.29 a | 14.14 a |
| | 16 | 5.09 a | 6.9 a | 10.21 a | 1.66 a | 2.4 a | 3.71 a | 4.94 a | 7.44 a | 2.29 a | 3.27 a | 5.47 a | 7.32 a | 11.24 a | 14.09 a |
| | 24 | 4.92 a | 6.74 a | 10.06 a | 1.55 a | 2.3 a | 3.62 a | 4.86 a | 7.37 a | 2.18 a | 3.16 a | 5.37 a | 7.22 a | 11.14 a | 13.98 a |
| 12 | 12 | 4.55 a | 5.93 a | 8.45 a | 1.64 a | 2.38 a | 3.69 a | 4.93 a | 7.43 a | 2.23 a | 3.18 a | 5.29 a | 7.16 a | 11.23 a | 14.07 a |
| | 16 | 4.44 a | 5.83 a | 8.36 a | 1.57 a | 2.31 a | 3.63 a | 4.87 a | 7.38 a | 2.15 a | 3.11 a | 5.22 a | 7.09 a | 11.15 a | 13.99 a |
| | 24 | 4.22 a | 5.62 a | 8.18 a | 1.41 a | 2.16 a | 3.51 a | 4.75 a | 7.27 a | 1.99 a | 2.96 a | 5.07 a | 6.96 a | 11.01 a | 13.84 a |
| 14 | 12 | 3.8 a | 4.85 a | 6.85 a | 1.56 a | 2.3 a | 3.63 a | 4.86 a | 7.37 a | 2.07 a | 3 a | 4.96 a | 6.75 a | 10.8 a | 13.99 a |
| | 16 | 3.68 a | 4.73 a | 6.75 a | 1.45 a | 2.2 a | 3.55 a | 4.78 a | 7.3 a | 1.97 a | 2.9 a | 4.87 a | 6.66 a | 10.7 a | 13.89 a |
| | 24 | 3.42 a | 4.5 a | 6.54 a | 1.24 a | 2 a | 3.38 a | 4.62 a | 7.15 a | 1.76 a | 2.71 a | 4.68 a | 6.49 a | 10.51 a | 13.68 a |
| 16 | 12 | 3.07 a | 3.92 a | 5.58 a | 1.45 a | 2.2 a | 3.55 a | 4.79 a | 7.3 a | 1.89 a | 2.78 a | 4.54 a | 6.22 a | 9.94 a | 12.85 a |
| | 16 | 2.93 a | 3.79 a | 5.47 a | 1.31 a | 2.07 a | 3.44 a | 4.68 a | 7.21 a | 1.76 a | 2.66 a | 4.43 a | 6.11 a | 9.82 a | 12.72 a |
| | 24 | 2.66 c | 3.54 b | 5.25 a | 1.04 c | 1.81 a | 3.23 a | 4.47 a | 7.02 a | 1.5 b | 2.41 a | 4.21 a | 5.89 a | 9.59 a | 12.48 a |

See Combined Axial and Lateral Load Table Notes

## 5 psf Lateral Load (Interior Walls Only)

| Wall Height (ft) | Spacing (in.) o.c. | 600S200-(mils) | | | | | | 600S250-(mils) | | | | | 600S300-(mils) | | | | 600S350-(mils) | | | |
|---|---|---|---|---|---|---|---|---|---|---|---|---|---|---|---|---|---|---|---|---|
| | | 33 ksi | | 50 ksi | | | | 33 ksi | 50 ksi | | | | 50 ksi | | | | 50 ksi | | | |
| | | 33 | 43 | 54 | 68 | 97 | 118 | 43 | 54 | 68 | 97 | 118 | 54 | 68 | 97 | 118 | 54 | 68 | 97 | 118 |
| 8 | 12 | 2.86 a | 4.29 a | 7.35 a | 9.77 a | 15.24 a | 19.54 a | 4.65 a | 7.59 a | 10.93 a | 17.91 a | 22.79 a | 7.9 a | 11.11 a | 19.22 a | 24.9 a | 10.21 a | 14.72 a | 23.85 a | 31.42 a |
| | 16 | 2.82 a | 4.25 a | 7.31 a | 9.73 a | 15.2 a | 19.5 a | 4.61 a | 7.55 a | 10.88 a | 17.86 a | 22.75 a | 7.86 a | 11.07 a | 19.17 a | 24.85 a | 10.17 a | 14.68 a | 23.8 a | 31.36 a |
| | 24 | 2.74 a | 4.17 a | 7.23 a | 9.65 a | 15.12 a | 19.42 a | 4.52 a | 7.48 a | 10.8 a | 17.77 a | 22.65 a | 7.78 a | 10.98 a | 19.08 a | 24.76 a | 10.09 a | 14.59 a | 23.7 a | 31.26 a |
| 9 | 12 | 2.81 a | 4.22 a | 7.22 a | 9.62 a | 15.01 a | 19.25 a | 4.58 a | 7.47 a | 10.74 a | 17.58 a | 22.38 a | 7.78 a | 10.93 a | 18.86 a | 24.47 a | 10.03 a | 14.47 a | 23.44 a | 30.71 a |
| | 16 | 2.76 a | 4.17 a | 7.18 a | 9.57 a | 14.96 a | 19.2 a | 4.53 a | 7.42 a | 10.69 a | 17.52 a | 22.32 a | 7.73 a | 10.88 a | 18.81 a | 24.41 a | 9.98 a | 14.42 a | 23.38 a | 30.64 a |
| | 24 | 2.66 a | 4.06 a | 7.08 a | 9.47 a | 14.87 a | 19.1 a | 4.42 a | 7.33 a | 10.58 a | 17.41 a | 22.21 a | 7.63 a | 10.77 a | 18.69 a | 24.29 a | 9.87 a | 14.31 a | 23.25 a | 30.52 a |
| 10 | 12 | 2.75 a | 4.14 a | 7.07 a | 9.43 a | 14.73 a | 18.9 a | 4.5 a | 7.33 a | 10.53 a | 17.2 a | 21.89 a | 7.63 a | 10.72 a | 18.45 a | 23.97 a | 9.82 a | 14.19 a | 22.97 a | 29.9 a |
| | 16 | 2.69 a | 4.07 a | 7.01 a | 9.37 a | 14.67 a | 18.83 a | 4.44 a | 7.27 a | 10.46 a | 17.13 a | 21.82 a | 7.57 a | 10.66 a | 18.38 a | 23.89 a | 9.75 a | 14.12 a | 22.9 a | 29.82 a |
| | 24 | 2.57 a | 3.95 a | 6.89 a | 9.25 a | 14.56 a | 18.71 a | 4.31 a | 7.15 a | 10.33 a | 16.99 a | 21.68 a | 7.45 a | 10.53 a | 18.24 a | 23.75 a | 9.63 a | 13.98 a | 22.75 a | 29.67 a |
| 12 | 12 | 2.61 a | 3.94 a | 6.69 a | 8.94 a | 14 a | 17.95 a | 4.31 a | 6.98 a | 10.01 a | 16.23 a | 20.67 a | 7.27 a | 10.27 a | 17.45 a | 22.79 a | 9.32 a | 13.52 a | 21.92 a | 28.01 a |
| | 16 | 2.53 a | 3.85 a | 6.6 a | 8.86 a | 13.92 a | 17.87 a | 4.22 a | 6.9 a | 9.92 a | 16.14 a | 20.57 a | 7.19 a | 10.19 a | 17.36 a | 22.69 a | 9.24 a | 13.42 a | 21.82 a | 27.9 a |
| | 24 | 2.36 a | 3.67 a | 6.44 a | 8.69 a | 13.76 a | 17.7 a | 4.03 a | 6.74 a | 9.74 a | 15.94 a | 20.37 a | 7.02 a | 10.01 a | 17.17 a | 22.49 a | 9.06 a | 13.23 a | 21.61 a | 27.7 a |
| 14 | 12 | 2.44 a | 3.68 a | 6.19 a | 8.3 a | 13.04 a | 16.69 a | 4.08 a | 6.6 a | 9.38 a | 15.04 a | 19.14 a | 6.84 a | 9.74 a | 16.28 a | 21.48 a | 8.75 a | 12.73 a | 20.52 a | 25.83 a |
| | 16 | 2.32 a | 3.57 a | 6.08 a | 8.19 a | 12.94 a | 16.59 a | 3.95 a | 6.49 a | 9.27 a | 14.92 a | 19.01 a | 6.73 a | 9.63 a | 16.16 a | 21.35 a | 8.63 a | 12.6 a | 20.38 a | 25.7 a |
| | 24 | 2.1 a | 3.34 a | 5.87 a | 7.98 a | 12.73 a | 16.37 a | 3.71 a | 6.28 a | 9.03 a | 14.67 a | 18.76 a | 6.51 a | 9.39 a | 15.92 a | 21.09 a | 8.41 a | 12.36 a | 20.12 a | 25.44 a |
| 16 | 12 | 2.23 a | 3.38 a | 5.6 a | 7.55 a | 11.89 a | 15.19 a | 3.8 a | 6.21 a | 8.7 a | 13.68 a | 17.4 a | 6.34 a | 9.14 a | 15.01 a | 19.59 a | 8.1 a | 11.84 a | 18.64 a | 23.47 a |
| | 16 | 2.09 a | 3.24 a | 5.47 a | 7.42 a | 11.76 a | 15.06 a | 3.65 a | 6.08 a | 8.56 a | 13.54 a | 17.25 a | 6.21 a | 8.99 a | 14.87 a | 19.44 a | 7.96 a | 11.69 a | 18.48 a | 23.31 a |
| | 24 | 1.81 a | 2.96 a | 5.22 a | 7.16 a | 11.52 a | 14.81 a | 3.35 a | 5.81 a | 8.28 a | 13.24 a | 16.95 a | 5.94 a | 8.71 a | 14.57 a | 19.13 a | 7.69 a | 11.39 a | 18.17 a | 23 a |

## 5 psf Lateral Load (Interior Walls Only)

| Wall Height (ft) | Spacing (in.) o.c. | 800S137-(mils) | | | | | 800S162-(mils) | | | | | | 800S200-(mils) | | | | | |
|---|---|---|---|---|---|---|---|---|---|---|---|---|---|---|---|---|---|---|
| | | 33 ksi | | 50 ksi | | | 33 ksi | | 50 ksi | | | | 33 ksi | | 50 ksi | | | |
| | | 33 | 43 | 54 | 68 | 97 | 33 | 43 | 54 | 68 | 97 | 118 | 33 | 43 | 54 | 68 | 97 | 118 |
| 8 | 12 | 1.7 a* | 2.43 a | 3.56 a | 4.73 a | 7.23 a | 2.38 a* | 3.35 a | 5.42 a | 7.23 a | 11.25 a | 14.31 a | 2.95 a* | 4.49 a | 7.74 a | 10.27 a | 15.96 a | 20.43 a |
| | 16 | 1.67 a* | 2.4 a | 3.54 a | 4.72 a | 7.21 a | 2.35 a* | 3.33 a | 5.4 a | 7.21 a | 11.23 a | 14.29 a | 2.92 a* | 4.46 a | 7.72 a | 10.24 a | 15.93 a | 20.41 a |
| | 24 | 1.62 a* | 2.36 a | 3.5 a | 4.68 a | 7.18 a | 2.28 a* | 3.27 a | 5.35 a | 7.16 a | 11.18 a | 14.24 a | 2.84 a* | 4.4 a | 7.66 a | 10.19 a | 15.88 a | 20.35 a |
| 9 | 12 | 1.68 a* | 2.41 a | 3.54 a | 4.72 a | 7.22 a | 2.35 a* | 3.33 a | 5.4 a | 7.21 a | 11.23 a | 14.29 a | 2.92 a* | 4.46 a | 7.72 a | 10.25 a | 15.93 a | 20.41 a |
| | 16 | 1.64 a* | 2.38 a | 3.52 a | 4.7 a | 7.2 a | 2.31 a* | 3.3 a | 5.37 a | 7.18 a | 11.2 a | 14.26 a | 2.88 a* | 4.43 a | 7.69 a | 10.21 a | 15.9 a | 20.38 a |
| | 24 | 1.57 a* | 2.32 a | 3.47 a | 4.65 a | 7.16 a | 2.22 a* | 3.23 a | 5.31 a | 7.12 a | 11.15 a | 14.21 a | 2.78 a* | 4.35 a | 7.61 a | 10.14 a | 15.83 a | 20.31 a |
| 10 | 12 | 1.65 a* | 2.39 a | 3.53 a | 4.7 a | 7.2 a | 2.32 a* | 3.31 a | 5.38 a | 7.19 a | 11.21 a | 14.27 a | 2.89 a* | 4.44 a | 7.7 a | 10.22 a | 15.91 a | 20.39 a |
| | 16 | 1.61 a* | 2.35 a | 3.5 a | 4.68 a | 7.18 a | 2.27 a* | 3.26 a | 5.34 a | 7.15 a | 11.18 a | 14.24 a | 2.83 a* | 4.39 a | 7.65 a | 10.18 a | 15.87 a | 20.34 a |
| | 24 | 1.52 a* | 2.28 a | 3.44 a | 4.62 a | 7.13 a | 2.16 a* | 3.18 a | 5.27 a | 7.08 a | 11.11 a | 14.17 a | 2.71 a* | 4.3 a | 7.56 a | 10.09 a | 15.79 a | 20.26 a |
| 12 | 12 | 1.59 a* | 2.34 a | 3.49 a | 4.67 a | 7.17 a | 2.25 a* | 3.25 a | 5.33 a | 7.14 a | 11.17 a | 14.23 a | 2.8 a* | 4.37 a | 7.63 a | 10.17 a | 15.86 a | 20.33 a |
| | 16 | 1.53 a* | 2.29 a | 3.45 a | 4.63 a | 7.13 a | 2.17 a* | 3.19 a | 5.28 a | 7.09 a | 11.12 a | 14.18 a | 2.72 a* | 4.3 a | 7.57 a | 10.1 a | 15.8 a | 20.27 a |
| | 24 | 1.4 a* | 2.18 a | 3.37 a | 4.55 a | 7.06 a | 2.02 a* | 3.06 a | 5.17 a | 6.98 a | 11.02 a | 14.08 a | 2.55 a* | 4.17 a | 7.44 a | 9.98 a | 15.68 a | 20.14 a |
| 14 | 12 | 1.52 a* | 2.28 a | 3.44 a | 4.62 a | 7.13 a | 2.17 a* | 3.18 a | 5.27 a | 7.08 a | 11.11 a | 14.17 a | 2.68 a* | 4.23 a | 7.39 a | 9.91 a | 15.7 a | 20.26 a |
| | 16 | 1.44 a* | 2.21 a | 3.39 a | 4.57 a | 7.08 a | 2.06 a* | 3.1 a | 5.2 a | 7.01 a | 11.04 a | 14.11 a | 2.57 a* | 4.14 a | 7.3 a | 9.83 a | 15.62 a | 20.18 a |
| | 24 | 1.26 a* | 2.07 a | 3.28 a | 4.46 a | 6.98 a | 1.85 a* | 2.93 a | 5.05 a | 6.87 a | 10.91 a | 13.97 a | 2.34 a* | 3.97 a | 7.14 a | 9.66 a | 15.46 a | 20.01 a |
| 16 | 12 | 1.44 a* | 2.22 a | 3.39 a | 4.57 a | 7.09 a | 2.07 a* | 3.1 a | 5.2 a | 7.02 a | 11.05 a | 14.11 a | 2.53 a* | 4.05 a | 7.05 a | 9.49 a | 15.09 a | 19.6 a |
| | 16 | 1.33 a* | 2.13 a | 3.32 a | 4.5 a | 7.02 a | 1.93 a* | 2.99 a | 5.11 a | 6.92 a | 10.96 a | 14.02 a | 2.38 a* | 3.94 a | 6.95 a | 9.39 a | 14.99 a | 19.49 a |
| | 24 | 1.1 a* | 1.94 a | 3.17 a | 4.36 a | 6.9 a | 1.65 a* | 2.77 a | 4.91 a | 6.73 a | 10.79 a | 13.85 a | 2.09 a* | 3.72 a | 6.73 a | 9.18 a | 14.78 a | 19.28 a |

See Combined Axial and Lateral Load Table Notes

# 5 psf Lateral Load (Interior Walls Only)

| Wall Height (ft) | Spacing (in.) o.c. | 800S250-(mils) | | | | | 800S300-(mils) | | | | 800S350-(mils) | | | |
|---|---|---|---|---|---|---|---|---|---|---|---|---|---|---|
| | | 33 ksi | 50 ksi | | | | 50 ksi | | | | 50 ksi | | | |
| | | 43 | 54 | 68 | 97 | 118 | 54 | 68 | 97 | 118 | 54 | 68 | 97 | 118 |
| 8 | 12 | 4.89 a | 8.13 a | 11.73 a | 19.55 a | 25.43 a | 8.48 a | 12 a | 21.32 a | 27.8 a | 10.93 a | 15.73 a | 25.86 a | 34.32 a |
| | 16 | 4.86 a | 8.1 a | 11.7 a | 19.52 a | 25.4 a | 8.45 a | 11.97 a | 21.28 a | 27.76 a | 10.9 a | 15.7 a | 25.83 a | 34.28 a |
| | 24 | 4.8 a | 8.04 a | 11.64 a | 19.45 a | 25.33 a | 8.39 a | 11.91 a | 21.21 a | 27.69 a | 10.84 a | 15.64 a | 25.75 a | 34.2 a |
| 9 | 12 | 4.85 a | 8.07 a | 11.67 a | 19.45 a | 25.26 a | 8.41 a | 11.92 a | 21.14 a | 27.58 a | 10.83 a | 15.61 a | 25.7 a | 34.05 a |
| | 16 | 4.82 a | 8.03 a | 11.63 a | 19.4 a | 25.22 a | 8.37 a | 11.88 a | 21.1 a | 27.54 a | 10.79 a | 15.57 a | 25.65 a | 34 a |
| | 24 | 4.74 a | 7.96 a | 11.55 a | 19.32 a | 25.13 a | 8.3 a | 11.8 a | 21.01 a | 27.45 a | 10.71 a | 15.48 a | 25.56 a | 33.91 a |
| 10 | 12 | 4.81 a | 8 a | 11.59 a | 19.32 a | 25.05 a | 8.33 a | 11.81 a | 20.93 a | 27.32 a | 10.71 a | 15.46 a | 25.46 a | 33.74 a |
| | 16 | 4.76 a | 7.96 a | 11.54 a | 19.27 a | 25 a | 8.28 a | 11.76 a | 20.88 a | 27.27 a | 10.66 a | 15.41 a | 25.4 a | 33.68 a |
| | 24 | 4.66 a | 7.86 a | 11.45 a | 19.16 a | 24.89 a | 8.19 a | 11.67 a | 20.77 a | 27.16 a | 10.56 a | 15.31 a | 25.29 a | 33.57 a |
| 12 | 12 | 4.7 a | 7.82 a | 11.38 a | 18.99 a | 24.47 a | 8.13 a | 11.53 a | 20.37 a | 26.64 a | 10.41 a | 15.09 a | 24.78 a | 32.99 a |
| | 16 | 4.63 a | 7.76 a | 11.32 a | 18.92 a | 24.39 a | 8.06 a | 11.47 a | 20.3 a | 26.56 a | 10.34 a | 15.02 a | 24.7 a | 32.91 a |
| | 24 | 4.49 a | 7.63 a | 11.18 a | 18.77 a | 24.24 a | 7.92 a | 11.33 a | 20.14 a | 26.4 a | 10.2 a | 14.87 a | 24.54 a | 32.74 a |
| 14 | 12 | 4.56 a | 7.58 a | 11.02 a | 18.34 a | 23.64 a | 7.86 a | 11.17 a | 19.63 a | 25.73 a | 10.04 a | 14.6 a | 23.95 a | 31.77 a |
| | 16 | 4.46 a | 7.49 a | 10.93 a | 18.24 a | 23.54 a | 7.77 a | 11.08 a | 19.53 a | 25.63 a | 9.95 a | 14.51 a | 23.84 a | 31.66 a |
| | 24 | 4.28 a | 7.32 a | 10.75 a | 18.05 a | 23.33 a | 7.59 a | 10.91 a | 19.33 a | 25.42 a | 9.77 a | 14.32 a | 23.63 a | 31.44 a |
| 16 | 12 | 4.38 a | 7.26 a | 10.54 a | 17.48 a | 22.56 a | 7.53 a | 10.72 a | 18.72 a | 24.64 a | 9.61 a | 14.03 a | 23.01 a | 30.13 a |
| | 16 | 4.26 a | 7.15 a | 10.43 a | 17.36 a | 22.43 a | 7.42 a | 10.61 a | 18.6 a | 24.51 a | 9.5 a | 13.91 a | 22.88 a | 30 a |
| | 24 | 4.03 a | 6.94 a | 10.2 a | 17.11 a | 22.17 a | 7.19 a | 10.39 a | 18.35 a | 24.25 a | 9.26 a | 13.67 a | 22.61 a | 29.73 a |

See Combined Axial and Lateral Load Table Notes



## 15 psf Lateral Load

| Wall Height (ft) | Spacing (in.) o.c. | 362S137-(mils) | | | | 362S162-(mils) | | | | | 362S200-(mils) | | | | | 362S250-(mils) | | | |
|---|---|---|---|---|---|---|---|---|---|---|---|---|---|---|---|---|---|---|---|
| | | 33 ksi | | 50 ksi | | 33 ksi | | 50 ksi | | | 33 ksi | | 50 ksi | | | 33 ksi | 50 ksi | | |
| | | 33 | 43 | 54 | 68 | 33 | 43 | 54 | 68 | 97 | 97 | 33 | 54 | 68 | 97 | 43 | 54 | 68 | 97 |
| 8 | 12 | 1.13 a | 1.75 a | 2.85 a | 3.82 a | 1.5 a | 2.18 a | 3.69 a | 4.85 a | 7.21 a | 1.87 a | 2.88 a | 4.72 a | 7.6 a | 8.92 a | 3.3 a | 5.37 a | 7.17 a | 10.24 a |
| | 16 | 0.96 a | 1.58 a | 2.71 a | 3.7 a | 1.32 a | 2 a | 3.54 a | 4.72 a | 7.08 a | 1.67 a | 2.69 a | 4.55 a | 7.4 a | 8.78 a | 3.09 a | 5.19 a | 6.99 a | 10.08 a |
| | 24 | 0.63 b | 1.25 a | 2.45 a | 3.47 a | 0.96 a | 1.66 a | 3.25 a | 4.45 a | 6.82 a | 1.27 a | 2.3 a | 4.22 a | 7.01 a | 8.5 a | 2.68 a | 4.83 a | 6.64 a | 9.76 a |
| 9 | 12 | 0.97 a | 1.57 a | 2.61 a | 3.54 a | 1.31 a | 1.96 a | 3.39 a | 4.47 a | 6.66 a | 1.65 a | 2.62 a | 4.32 a | 7.01 a | 8.21 a | 3.05 a | 5 a | 6.58 a | 9.45 a |
| | 16 | 0.77 a | 1.37 a | 2.45 a | 3.4 a | 1.09 a | 1.75 a | 3.21 a | 4.31 a | 6.5 a | 1.41 a | 2.39 a | 4.12 a | 6.78 a | 8.05 a | 2.79 a | 4.78 a | 6.37 a | 9.26 a |
| | 24 | 0.36 c | 0.96 b | 2.13 a | 3.12 a | 0.65 c | 1.33 a | 2.86 a | 4 a | 6.19 a | 0.93 b | 1.92 a | 3.72 a | 6.32 a | 7.72 a | 2.28 a | 4.35 a | 5.95 a | 8.87 a |
| 10 | 12 | 0.8 b | 1.38 a | 2.35 a | 3.23 a | 1.11 a | 1.63 a | 3.06 a | 4.06 a | 6.05 a | 1.43 a | 2.35 a | 3.89 a | 6.35 a | 7.45 a | 2.77 a | 4.59 a | 5.96 a | 8.61 a |
| | 16 | 0.56 c | 1.13 b | 2.17 a | 3.07 a | 0.85 b | 1.4 a | 2.86 a | 3.88 a | 5.87 a | 1.14 a | 2.07 a | 3.67 a | 6.08 a | 7.27 a | 2.47 a | 4.33 a | 5.72 a | 8.39 a |
| | 24 | 0.07 e | 0.65 d | 1.79 c | 2.74 b | 0.33 d | 0.93 c | 2.45 b | 3.52 a | 5.51 a | 0.56 c | 1.52 b | 3.21 a | 5.55 a | 6.89 a | 1.86 a | 3.82 a | 5.24 a | 7.95 a |
| 12 | 12 | 0.44 d | 0.96 c | 1.82 b | 2.58 a | 0.69 d | 1.32 b | 2.35 a | 3.19 a | 4.78 a | 0.95 c | 1.77 a | 2.99 a | 4.95 a | 5.89 a | 2.13 a | 3.55 a | 4.68 a | 6.87 a |
| | 16 | 0.12 e | 0.64 d | 1.59 c | 2.38 b | 0.35 e | 0.99 d | 2.1 c | 2.98 b | 4.57 a | 0.57 d | 1.42 c | 2.72 b | 4.63 a | 5.67 a | 1.73 b | 3.25 a | 4.4 a | 6.61 a |
| | 24 | | | 1.13 e | 1.98 d | | 0.32 e | 1.61 d | 2.54 d | 4.14 b | -0.18 e | 0.7 d | 2.17 d | 4 c | 5.23 a | 0.94 d | 2.63 c | 3.82 b | 6.09 a |
| 14 | 12 | 0.08 e | 0.54 e | 1.33 d | 1.98 c | 0.28 e | 0.84 d | 1.73 d | 2.44 c | 3.7 a | 0.47 e | 1.2 d | 2.21 c | 3.75 b | 4.59 a | 1.48 c | 2.64 b | 3.58 a | 5.37 a |
| | 16 | | 0.16 e | 1.06 e | 1.75 d | | 0.44 e | 1.45 e | 2.2 d | 3.46 c | 0.02 e | 0.78 e | 1.9 d | 3.4 c | 4.34 b | 1.01 d | 2.3 c | 3.26 b | 5.08 a |
| | 24 | | | 0.53 f | 1.3 e | | | 0.9 f | 1.71 e | 3 d | | | 1.29 e | 2.7 e | 3.86 d | 0.08 e | 1.61 e | 2.63 d | 4.51 c |
| 16 | 12 | | 0.16 f | 0.91 e | 1.47 e | | 0.4 e | 1.22 e | 1.83 d | 2.85 c | 0.05 f | 0.69 e | 1.59 d | 2.81 d | 3.57 b | 0.89 e | 1.92 d | 2.71 c | 4.2 a |
| | 16 | | | 0.61 f | 1.22 e | | | 0.92 f | 1.57 e | 2.6 d | | 0.23 f | 1.26 e | 2.43 e | 3.31 d | 0.37 e | 1.55 e | 2.37 d | 3.89 c |
| | 24 | | | 0.03 f | 0.73 f | | | 0.32 f | 1.04 f | 2.09 e | | | 0.6 f | 1.69 f | 2.79 e | | 0.81 f | 1.68 e | 3.27 d |

## 15 psf Lateral Load

| Wall Height (ft) | Spacing (in.) o.c. | 362S300-(mils) | | | 600S137-(mils) | | | | | 600S162-(mils) | | | | | | 600S200-(mils) | |
|---|---|---|---|---|---|---|---|---|---|---|---|---|---|---|---|---|---|
| | | 50 ksi | | | 33 ksi | | 50 ksi | | | 33 ksi | | 50 ksi | | | | 33 ksi | |
| | | 54 | 68 | 97 | 33 | 43 | 54 | 68 | 97 | 33 | 43 | 54 | 68 | 97 | 118 | 33 | 43 |
| 8 | 12 | 5.26 a | 7.47 a | 11.32 a | 1.46 a | 2.21 a | 3.55 a | 4.79 a | 7.3 a | 2.11 a | 3.09 a | 5.3 a | 7.14 a | 11.06 a | 13.89 a | 2.51 a | 3.92 a |
| | 16 | 5.02 a | 7.22 a | 11.1 a | 1.33 a | 2.08 a | 3.44 a | 4.68 a | 7.21 a | 1.97 a | 2.96 a | 5.16 a | 7.01 a | 10.93 a | 13.76 a | 2.35 a | 3.75 a |
| | 24 | 4.55 a | 6.74 a | 10.66 a | 1.05 a | 1.81 a | 3.23 a | 4.47 a | 7.02 a | 1.68 a | 2.68 a | 4.9 a | 6.76 a | 10.67 a | 13.49 a | 2.03 a | 3.42 a |
| 9 | 12 | 4.85 a | 6.86 a | 10.56 a | 1.35 a | 2.1 a | 3.47 a | 4.7 a | 7.23 a | 1.99 a | 2.98 a | 5.19 a | 7.04 a | 10.95 a | 13.79 a | 2.36 a | 3.75 a |
| | 16 | 4.57 a | 6.57 a | 10.29 a | 1.18 a | 1.93 a | 3.33 a | 4.57 a | 7.11 a | 1.81 a | 2.81 a | 5.02 a | 6.88 a | 10.79 a | 13.62 a | 2.17 a | 3.55 a |
| | 24 | 3.99 a | 6 a | 9.77 a | 0.83 a | 1.6 a | 3.05 a | 4.3 a | 6.86 a | 1.45 a | 2.46 a | 4.69 a | 6.56 a | 10.46 a | 13.28 a | 1.77 a | 3.14 a |
| 10 | 12 | 4.42 a | 6.24 a | 9.6 a | 1.23 a | 1.98 a | 3.37 a | 4.61 a | 7.14 a | 1.85 a | 2.84 a | 5.06 a | 6.93 a | 10.84 a | 13.67 a | 2.21 a | 3.57 a |
| | 16 | 4.08 a | 5.9 a | 9.3 a | 1.02 a | 1.78 a | 3.2 a | 4.44 a | 6.99 a | 1.63 a | 2.63 a | 4.85 a | 6.73 a | 10.64 a | 13.46 a | 1.96 a | 3.32 a |
| | 24 | 3.41 a | 5.24 a | 8.7 a | 0.59 a | 1.36 a | 2.86 a | 4.11 a | 6.69 a | 1.18 a | 2.2 a | 4.44 a | 6.34 a | 10.23 a | 13.04 a | 1.48 a | 2.81 a |
| 12 | 12 | 3.57 a | 5 a | 7.64 a | 0.95 a | 1.71 a | 3.15 a | 4.39 a | 6.94 a | 1.52 a | 2.51 a | 4.64 a | 6.54 a | 10.57 a | 13.39 a | 1.84 a | 3.14 a |
| | 16 | 3.14 b | 4.59 a | 7.27 a | 0.64 a | 1.41 a | 2.9 a | 4.15 a | 6.73 a | 1.21 a | 2.2 a | 4.35 a | 6.26 a | 10.28 a | 13.09 a | 1.5 a | 2.79 a |
| | 24 | 2.27 d | 3.76 c | 6.55 a | 0.02 c | 0.81 b | 2.41 a | 3.67 a | 6.29 a | 0.58 c | 1.6 a | 3.78 a | 5.71 a | 9.69 a | 12.49 a | 0.81 b | 2.09 a |
| 14 | 12 | 2.66 c | 3.79 b | 5.94 a | 0.61 b | 1.39 a | 2.88 a | 4.13 a | 6.71 a | 1.15 a | 2.11 a | 4.13 a | 5.95 a | 9.93 a | 13.07 a | 1.42 a | 2.65 a |
| | 16 | 2.16 d | 3.32 c | 5.54 b | 0.19 d | 0.98 b | 2.55 a | 3.8 a | 6.41 a | 0.73 c | 1.71 b | 3.75 a | 5.59 a | 9.54 a | 12.66 a | 0.97 b | 2.19 a |
| | 24 | 1.14 e | 2.39 e | 4.73 d | | 0.17 d | 1.89 c | 3.15 b | 5.82 a | -0.09 d | 0.92 d | 3.01 c | 4.87 a | 8.77 a | 11.84 a | 0.07 d | 1.27 c |
| 16 | 12 | 1.83 e | 2.78 d | 4.6 b | 0.22 d | 1.01 c | 2.58 b | 3.83 a | 6.44 a | 0.73 c | 1.67 b | 3.53 a | 5.23 a | 8.89 a | 11.74 a | 0.96 c | 2.1 a |
| | 16 | 1.28 e | 2.27 e | 4.16 d | -0.32 e | 0.48 d | 2.14 c | 3.4 b | 6.05 a | 0.22 d | 1.17 d | 3.07 c | 4.8 a | 8.42 a | 11.24 a | 0.4 d | 1.54 c |
| | 24 | 0.18 f | 1.26 f | 3.29 e | | -0.58 e | 1.28 e | 2.55 d | 5.28 c | | 0.18 e | 2.17 d | 3.92 c | 7.49 b | 10.26 a | -0.73 e | 0.4 d |

See Combined Axial and Lateral Load Table Notes

## 15 psf Lateral Load

| Wall Height (ft) | Spacing (in.) o.c. | 600S200-(mils) | | | | 600S250-(mils) | | | | | 600S300-(mils) | | | | 600S350-(mils) | | | |
|---|---|---|---|---|---|---|---|---|---|---|---|---|---|---|---|---|---|---|
| | | 50 ksi | | | | 33 ksi | 50 ksi | | | | 50 ksi | | | | 50 ksi | | | |
| | | 54 | 68 | 97 | 118 | 43 | 54 | 68 | 97 | 118 | 54 | 68 | 97 | 118 | 54 | 68 | 97 | 118 |
| 8 | 12 | 7.11 a | 9.54 a | 15.01 a | 19.3 a | 4.39 a | 7.36 a | 10.67 a | 17.63 a | 22.51 a | 7.67 a | 10.85 a | 18.94 a | 24.61 a | 9.96 a | 14.45 a | 23.56 a | 31.11 a |
| | 16 | 6.99 a | 9.42 a | 14.89 a | 19.18 a | 4.27 a | 7.24 a | 10.54 a | 17.49 a | 22.36 a | 7.55 a | 10.73 a | 18.8 a | 24.47 a | 9.83 a | 14.32 a | 23.41 a | 30.95 a |
| | 24 | 6.76 a | 9.18 a | 14.66 a | 18.94 a | 4.01 a | 7.01 a | 10.28 a | 17.21 a | 22.07 a | 7.31 a | 10.48 a | 18.53 a | 24.18 a | 9.58 a | 14.04 a | 23.11 a | 30.65 a |
| 9 | 12 | 6.93 a | 9.32 a | 14.72 a | 18.95 a | 4.26 a | 7.18 a | 10.42 a | 17.23 a | 22.03 a | 7.48 a | 10.61 a | 18.52 a | 24.11 a | 9.71 a | 14.14 a | 23.07 a | 30.33 a |
| | 16 | 6.78 a | 9.17 a | 14.58 a | 18.8 a | 4.1 a | 7.03 a | 10.26 a | 17.06 a | 21.85 a | 7.33 a | 10.46 a | 18.35 a | 23.93 a | 9.56 a | 13.97 a | 22.88 a | 30.13 a |
| | 24 | 6.48 a | 8.87 a | 14.29 a | 18.5 a | 3.78 a | 6.74 a | 9.94 a | 16.71 a | 21.49 a | 7.04 a | 10.14 a | 18 a | 23.57 a | 9.24 a | 13.63 a | 22.51 a | 29.75 a |
| 10 | 12 | 6.71 a | 9.07 a | 14.38 a | 18.53 a | 4.11 a | 6.98 a | 10.14 a | 16.77 a | 21.46 a | 7.27 a | 10.34 a | 18.03 a | 23.53 a | 9.44 a | 13.78 a | 22.52 a | 29.44 a |
| | 16 | 6.53 a | 8.89 a | 14.21 a | 18.35 a | 3.91 a | 6.8 a | 9.94 a | 16.56 a | 21.24 a | 7.09 a | 10.15 a | 17.82 a | 23.31 a | 9.25 a | 13.57 a | 22.3 a | 29.21 a |
| | 24 | 6.17 a | 8.52 a | 13.86 a | 17.98 a | 3.52 a | 6.44 a | 9.55 a | 16.14 a | 20.81 a | 6.73 a | 9.76 a | 17.4 a | 22.88 a | 8.87 a | 13.16 a | 21.85 a | 28.75 a |
| 12 | 12 | 6.19 a | 8.44 a | 13.52 a | 17.45 a | 3.76 a | 6.49 a | 9.47 a | 15.66 a | 20.07 a | 6.77 a | 9.74 a | 16.88 a | 22.19 a | 8.8 a | 12.95 a | 21.3 a | 27.39 a |
| | 16 | 5.94 a | 8.19 a | 13.29 a | 17.2 a | 3.48 a | 6.24 a | 9.2 a | 15.37 a | 19.78 a | 6.52 a | 9.47 a | 16.6 a | 21.89 a | 8.54 a | 12.67 a | 20.99 a | 27.08 a |
| | 24 | 5.44 a | 7.69 a | 12.81 a | 16.69 a | 2.93 a | 5.75 a | 8.66 a | 14.79 a | 19.18 a | 6.02 a | 8.94 a | 16.02 a | 21.3 a | 8.01 a | 12.1 a | 20.37 a | 26.46 a |
| 14 | 12 | 5.55 a | 7.66 a | 12.43 a | 16.05 a | 3.35 a | 5.95 a | 8.69 a | 14.31 a | 18.39 a | 6.19 a | 9.05 a | 15.55 a | 20.71 a | 8.07 a | 11.99 a | 19.72 a | 25.05 a |
| | 16 | 5.24 a | 7.35 a | 12.12 a | 15.73 a | 2.99 a | 5.63 a | 8.34 a | 13.94 a | 18.01 a | 5.86 a | 8.7 a | 15.19 a | 20.32 a | 7.73 a | 11.63 a | 19.32 a | 24.66 a |
| | 24 | 4.6 a | 6.71 a | 11.51 a | 15.09 a | 2.26 a | 4.99 a | 7.64 a | 13.21 a | 17.26 a | 5.22 a | 8 a | 14.46 a | 19.55 a | 7.05 a | 10.89 a | 18.53 a | 23.88 a |
| 16 | 12 | 4.84 a | 6.78 a | 11.15 a | 14.42 a | 2.89 a | 5.41 a | 7.85 a | 12.81 a | 16.5 a | 5.55 a | 8.28 a | 14.13 a | 18.67 a | 7.27 a | 10.94 a | 17.69 a | 22.54 a |
| | 16 | 4.46 a | 6.4 a | 10.79 a | 14.04 a | 2.44 a | 5 a | 7.42 a | 12.37 a | 16.05 a | 5.15 a | 7.85 a | 13.68 a | 18.21 a | 6.86 a | 10.49 a | 17.22 a | 22.07 a |
| | 24 | 3.7 b | 5.64 a | 10.06 a | 13.27 a | 1.53 c | 4.2 b | 6.57 a | 11.49 a | 15.15 a | 4.35 a | 6.99 a | 12.8 a | 17.29 a | 6.03 a | 9.59 a | 16.27 a | 21.14 a |

## 15 psf Lateral Load

| Wall Height (ft) | Spacing (in.) o.c. | 800S137-(mils) | | | | | 800S162-(mils) | | | | | | 800S200-(mils) | | | | | |
|---|---|---|---|---|---|---|---|---|---|---|---|---|---|---|---|---|---|---|
| | | 33 ksi | | 50 ksi | | | 33 ksi | | 50 ksi | | | | 33 ksi | | 50 ksi | | | |
| | | 33 | 43 | 54 | 68 | 97 | 33 | 43 | 54 | 68 | 97 | 118 | 33 | 43 | 54 | 68 | 97 | 118 |
| 8 | 12 | 1.53 a* | 2.29 a | 3.45 a | 4.63 a | 7.13 a | 2.17 a* | 3.19 a | 5.28 a | 7.09 a | 11.12 a | 14.18 a | 2.73 a* | 4.31 a | 7.58 a | 10.1 a | 15.8 a | 20.27 a |
| | 16 | 1.44 a* | 2.22 a | 3.39 a | 4.57 a | 7.09 a | 2.07 a* | 3.1 a | 5.2 a | 7.02 a | 11.05 a | 14.11 a | 2.62 a* | 4.23 a | 7.49 a | 10.02 a | 15.72 a | 20.18 a |
| | 24 | 1.27 a* | 2.08 a | 3.28 a | 4.47 a | 6.99 a | 1.86 a* | 2.94 a | 5.06 a | 6.88 a | 10.92 a | 13.98 a | 2.39 a* | 4.06 a | 7.32 a | 9.85 a | 15.56 a | 20.02 a |
| 9 | 12 | 1.46 a* | 2.23 a | 3.4 a | 4.58 a | 7.1 a | 2.09 a* | 3.12 a | 5.22 a | 7.03 a | 11.06 a | 14.13 a | 2.64 a* | 4.25 a | 7.51 a | 10.04 a | 15.73 a | 20.2 a |
| | 16 | 1.35 a* | 2.15 a | 3.34 a | 4.52 a | 7.04 a | 1.96 a* | 3.01 a | 5.13 a | 6.94 a | 10.98 a | 14.04 a | 2.5 a* | 4.14 a | 7.4 a | 9.93 a | 15.63 a | 20.09 a |
| | 24 | 1.14 a* | 1.97 a | 3.2 a | 4.38 a | 6.91 a | 1.69 a* | 2.8 a | 4.94 a | 6.76 a | 10.81 a | 13.88 a | 2.21 a* | 3.92 a | 7.19 a | 9.72 a | 15.43 a | 19.88 a |
| 10 | 12 | 1.38 a* | 2.17 a | 3.36 a | 4.54 a | 7.05 a | 2 a* | 3.05 a | 5.15 a | 6.97 a | 11.01 a | 14.07 a | 2.54 a* | 4.17 a | 7.43 a | 9.96 a | 15.66 a | 20.13 a |
| | 16 | 1.25 a* | 2.06 a | 3.27 a | 4.46 a | 6.98 a | 1.83 a* | 2.92 a | 5.04 a | 6.86 a | 10.9 a | 13.96 a | 2.36 a* | 4.03 a | 7.3 a | 9.83 a | 15.54 a | 20 a |
| | 24 | 0.98 a* | 1.85 a | 3.1 a | 4.29 a | 6.83 a | 1.51 a* | 2.66 a | 4.81 a | 6.64 a | 10.7 a | 13.76 a | 2.01 a* | 3.76 a | 7.04 a | 9.57 a | 15.29 a | 19.73 a |
| 12 | 12 | 1.21 a* | 2.03 a | 3.24 a | 4.43 a | 6.96 a | 1.78 a* | 2.87 a | 5 a | 6.82 a | 10.87 a | 13.93 a | 2.3 a* | 3.98 a | 7.25 a | 9.79 a | 15.5 a | 19.95 a |
| | 16 | 1.02 a* | 1.87 a | 3.12 a | 4.31 a | 6.85 a | 1.55 a* | 2.69 a | 4.84 a | 6.66 a | 10.72 a | 13.78 a | 2.05 a* | 3.79 a | 7.06 a | 9.6 a | 15.32 a | 19.76 a |
| | 24 | 0.63 a* | 1.56 a | 2.87 a | 4.07 a | 6.63 a | 1.08 a* | 2.31 a | 4.51 a | 6.34 a | 10.43 a | 13.49 a | 1.54 a* | 3.4 a | 6.68 a | 9.23 a | 14.96 a | 19.39 a |
| 14 | 12 | 1 a* | 1.86 a | 3.11 a | 4.3 a | 6.84 a | 1.53 a* | 2.67 a | 4.82 a | 6.65 a | 10.71 a | 13.77 a | 2 a* | 3.71 a | 6.88 a | 9.41 a | 15.21 a | 19.75 a |
| | 16 | 0.74 a* | 1.65 a | 2.94 a | 4.14 a | 6.69 a | 1.21 a* | 2.42 a | 4.6 a | 6.43 a | 10.51 a | 13.57 a | 1.66 a* | 3.45 a | 6.63 a | 9.16 a | 14.97 a | 19.49 a |
| | 24 | 0.21 a* | 1.22 a | 2.61 a | 3.81 a | 6.4 a | 0.57 a* | 1.9 a | 4.15 a | 6 a | 10.11 a | 13.17 a | 0.98 a* | 2.93 a | 6.12 a | 8.66 a | 14.48 a | 18.98 a |
| 16 | 12 | 0.76 a* | 1.67 a | 2.96 a | 4.15 a | 6.7 a | 1.23 a* | 2.44 a | 4.62 a | 6.45 a | 10.53 a | 13.59 a | 1.66 a* | 3.39 a | 6.42 a | 8.86 a | 14.48 a | 18.95 a |
| | 16 | 0.42 a* | 1.39 a | 2.74 a | 3.94 a | 6.51 a | 0.82 a* | 2.1 a | 4.33 a | 6.17 a | 10.26 a | 13.32 a | 1.22 a* | 3.06 a | 6.1 a | 8.54 a | 14.17 a | 18.63 a |
| | 24 | | 0.84 a | 2.3 a | 3.52 a | 6.13 a | | 1.44 a | 3.74 a | 5.6 a | 9.74 a | 12.8 a | 0.35 a* | 2.4 a | 5.46 a | 7.91 a | 13.56 a | 17.98 a |

See Combined Axial and Lateral Load Table Notes

# 15 psf Lateral Load

| Wall Height (ft) | Spacing (in.) o.c. | 800S250-(mils) | | | | | 800S300-(mils) | | | | 800S350-(mils) | | | |
|---|---|---|---|---|---|---|---|---|---|---|---|---|---|---|
| | | 33 ksi | 50 ksi | | | | 50 ksi | | | | 50 ksi | | | |
| | | 43 | 54 | 68 | 97 | 118 | 54 | 68 | 97 | 118 | 54 | 68 | 97 | 118 |
| 8 | 12 | 4.71 a | 7.95 a | 11.55 a | 19.35 a | 25.22 a | 8.3 a | 11.82 a | 21.11 a | 27.58 a | 10.74 a | 15.54 a | 25.64 a | 34.09 a |
| | 16 | 4.61 a | 7.86 a | 11.46 a | 19.24 a | 25.11 a | 8.2 a | 11.73 a | 21.01 a | 27.47 a | 10.64 a | 15.44 a | 25.53 a | 33.97 a |
| | 24 | 4.43 a | 7.69 a | 11.27 a | 19.04 a | 24.89 a | 8.02 a | 11.55 a | 20.8 a | 27.25 a | 10.45 a | 15.24 a | 25.31 a | 33.74 a |
| 9 | 12 | 4.62 a | 7.85 a | 11.44 a | 19.19 a | 24.99 a | 8.18 a | 11.69 a | 20.88 a | 27.31 a | 10.59 a | 15.36 a | 25.42 a | 33.76 a |
| | 16 | 4.5 a | 7.74 a | 11.32 a | 19.06 a | 24.86 a | 8.06 a | 11.57 a | 20.75 a | 27.17 a | 10.47 a | 15.24 a | 25.28 a | 33.62 a |
| | 24 | 4.26 a | 7.51 a | 11.08 a | 18.8 a | 24.58 a | 7.83 a | 11.34 a | 20.49 a | 26.9 a | 10.22 a | 14.99 a | 25 a | 33.33 a |
| 10 | 12 | 4.52 a | 7.73 a | 11.3 a | 19 a | 24.72 a | 8.05 a | 11.53 a | 20.61 a | 26.99 a | 10.41 a | 15.16 a | 25.12 a | 33.39 a |
| | 16 | 4.37 a | 7.59 a | 11.16 a | 18.84 a | 24.55 a | 7.9 a | 11.39 a | 20.45 a | 26.82 a | 10.26 a | 15 a | 24.95 a | 33.21 a |
| | 24 | 4.08 a | 7.32 a | 10.87 a | 18.53 a | 24.22 a | 7.62 a | 11.11 a | 20.13 a | 26.48 a | 9.97 a | 14.7 a | 24.61 a | 32.86 a |
| 12 | 12 | 4.28 a | 7.43 a | 10.98 a | 18.54 a | 24 a | 7.72 a | 11.14 a | 19.92 a | 26.17 a | 9.99 a | 14.66 a | 24.3 a | 32.49 a |
| | 16 | 4.08 a | 7.24 a | 10.77 a | 18.31 a | 23.77 a | 7.52 a | 10.94 a | 19.69 a | 25.93 a | 9.78 a | 14.45 a | 24.06 a | 32.24 a |
| | 24 | 3.66 a | 6.85 a | 10.36 a | 17.86 a | 23.3 a | 7.12 a | 10.54 a | 19.24 a | 25.46 a | 9.37 a | 14.02 a | 23.58 a | 31.74 a |
| 14 | 12 | 4 a | 7.06 a | 10.48 a | 17.75 a | 23.02 a | 7.32 a | 10.64 a | 19.03 a | 25.11 a | 9.49 a | 14.04 a | 23.32 a | 31.11 a |
| | 16 | 3.72 a | 6.8 a | 10.2 a | 17.45 a | 22.71 a | 7.05 a | 10.38 a | 18.74 a | 24.8 a | 9.21 a | 13.75 a | 23 a | 30.78 a |
| | 24 | 3.17 a | 6.28 a | 9.66 a | 16.85 a | 22.09 a | 6.52 a | 9.85 a | 18.14 a | 24.17 a | 8.66 a | 13.19 a | 22.37 a | 30.13 a |
| 16 | 12 | 3.67 a | 6.61 a | 9.86 a | 16.74 a | 21.78 a | 6.85 a | 10.05 a | 17.98 a | 23.86 a | 8.92 a | 13.31 a | 22.21 a | 29.32 a |
| | 16 | 3.31 a | 6.28 a | 9.52 a | 16.36 a | 21.39 a | 6.51 a | 9.72 a | 17.61 a | 23.47 a | 8.57 a | 12.95 a | 21.82 a | 28.91 a |
| | 24 | 2.6 a | 5.63 a | 8.83 a | 15.62 a | 20.61 a | 5.83 a | 9.05 a | 16.86 a | 22.68 a | 7.87 a | 12.24 a | 21.02 a | 28.1 a |

See Combined Axial and Lateral Load Table Notes



## 20 psf Lateral Load

| Wall Height (ft) | Spacing (in.) o.c. | 362S137-(mils) | | | | 362S162-(mils) | | | | | 362S200-(mils) | | | | | 362S250-(mils) | | | |
|---|---|---|---|---|---|---|---|---|---|---|---|---|---|---|---|---|---|---|---|
| | | 33 ksi | | 50 ksi | | 33 ksi | | 50 ksi | | | 33 ksi | | 50 ksi | | | 33 ksi | 50 ksi | | |
| | | 33 | 43 | 54 | 68 | 33 | 43 | 54 | 68 | 97 | 97 | 33 | 54 | 68 | 97 | 43 | 54 | 68 | 97 |
| 8 | 12 | 0.96 a | 1.58 a | 2.71 a | 3.7 a | 1.32 a | 2 a | 3.54 a | 4.72 a | 7.08 a | 1.67 a | 2.69 a | 4.55 a | 7.4 a | 8.78 a | 3.09 a | 5.19 a | 6.99 a | 10.08 a |
| | 16 | 0.74 a | 1.36 a | 2.54 a | 3.55 a | 1.08 a | 1.77 a | 3.35 a | 4.54 a | 6.9 a | 1.4 a | 2.43 a | 4.33 a | 7.14 a | 8.6 a | 2.82 a | 4.95 a | 6.76 a | 9.86 a |
| | 24 | 0.31 c | 0.92 b | 2.18 a | 3.24 a | 0.6 b | 1.31 a | 2.96 a | 4.19 a | 6.55 a | 0.87 b | 1.92 a | 3.88 a | 6.62 a | 8.22 a | 2.26 a | 4.47 a | 6.29 a | 9.43 a |
| 9 | 12 | 0.77 a | 1.37 a | 2.45 a | 3.4 a | 1.09 a | 1.75 a | 3.21 a | 4.31 a | 6.5 a | 1.41 a | 2.39 a | 4.12 a | 6.78 a | 8.05 a | 2.79 a | 4.78 a | 6.37 a | 9.26 a |
| | 16 | 0.5 c | 1.09 b | 2.24 a | 3.22 a | 0.8 b | 1.47 a | 2.98 a | 4.1 a | 6.29 a | 1.09 a | 2.07 a | 3.85 a | 6.47 a | 7.83 a | 2.45 a | 4.49 a | 6.09 a | 9 a |
| | 24 | | 0.55 d | 1.81 c | 2.84 b | 0.21 d | 0.91 c | 2.51 b | 3.69 a | 5.87 a | 0.44 c | 1.45 b | 3.32 a | 5.85 a | 7.39 a | 1.77 a | 3.91 a | 5.53 a | 8.49 a |
| 10 | 12 | 0.56 c | 1.13 b | 2.17 a | 3.07 a | 0.85 b | 1.4 a | 2.86 a | 3.88 a | 5.87 a | 1.14 a | 2.07 a | 3.67 a | 6.08 a | 7.27 a | 2.47 a | 4.33 a | 5.72 a | 8.39 a |
| | 16 | 0.24 d | 0.81 c | 1.92 b | 2.85 a | 0.5 d | 1.09 c | 2.59 a | 3.64 a | 5.63 a | 0.75 c | 1.7 b | 3.36 a | 5.73 a | 7.02 a | 2.06 a | 3.99 a | 5.4 a | 8.1 a |
| | 24 | | 0.16 e | 1.42 d | 2.42 c | | 0.47 d | 2.05 c | 3.16 b | 5.15 a | | 0.96 d | 2.75 c | 5.02 b | 6.52 a | 1.25 c | 3.31 b | 4.76 a | 7.51 a |
| 12 | 12 | 0.12 e | 0.64 d | 1.59 c | 2.38 b | 0.35 e | 0.99 d | 2.1 c | 2.98 b | 4.57 a | 0.57 d | 1.42 c | 2.72 b | 4.63 a | 5.67 a | 1.73 b | 3.25 a | 4.4 a | 6.61 a |
| | 16 | | 0.21 e | 1.28 d | 2.12 d | | 0.54 e | 1.78 d | 2.69 c | 4.28 b | 0.07 e | 0.94 d | 2.35 c | 4.21 b | 5.38 a | 1.21 d | 2.84 c | 4.01 a | 6.26 a |
| | 24 | | | 0.66 e | 1.58 e | | | 1.12 e | 2.11 e | 3.72 d | | | 1.62 e | 3.37 d | 4.79 c | 0.16 e | 2.02 d | 3.25 c | 5.56 b |
| 14 | 12 | | 0.16 e | 1.06 e | 1.75 d | | 0.44 e | 1.45 e | 2.2 d | 3.46 c | 0.02 e | 0.78 e | 1.9 d | 3.4 c | 4.34 b | 1.01 d | 2.3 c | 3.26 b | 5.08 a |
| | 16 | | | 0.71 f | 1.45 e | | | 1.08 e | 1.87 e | 3.15 d | | 0.22 e | 1.5 e | 2.93 d | 4.02 c | 0.39 e | 1.84 d | 2.84 d | 4.7 b |
| | 24 | | | | 0.84 f | | | 0.35 f | 1.22 f | 2.53 e | | | 0.68 f | 2 e | 3.37 e | | 0.93 e | 1.99 e | 3.93 d |
| 16 | 12 | | | 0.61 f | 1.22 e | | | 0.92 f | 1.57 e | 2.6 d | | 0.23 f | 1.26 e | 2.43 e | 3.31 d | 0.37 e | 1.55 e | 2.37 d | 3.89 c |
| | 16 | | | 0.23 f | 0.9 f | | | 0.52 f | 1.22 f | 2.26 e | | | 0.82 f | 1.94 e | 2.96 e | | 1.06 e | 1.91 e | 3.47 d |
| | 24 | | | | 0.24 f | | | | 0.52 f | 1.59 f | | | | 0.94 f | 2.27 f | | 0.07 f | 1 f | 2.65 e |

## 20 psf Lateral Load

| Wall Height (ft) | Spacing (in.) o.c. | 362S300-(mils) | | | 600S137-(mils) | | | | | 600S162-(mils) | | | | | | 600S200-(mils) | |
|---|---|---|---|---|---|---|---|---|---|---|---|---|---|---|---|---|---|
| | | 50 ksi | | | 33 ksi | | 50 ksi | | | 33 ksi | | 50 ksi | | | | 33 ksi | |
| | | 54 | 68 | 97 | 33 | 43 | 54 | 68 | 97 | 33 | 43 | 54 | 68 | 97 | 118 | 33 | 43 |
| 8 | 12 | 5.26 a | 7.47 a | 11.32 a | 1.46 a | 2.21 a | 3.55 a | 4.79 a | 7.3 a | 2.11 a | 3.09 a | 5.3 a | 7.14 a | 11.06 a | 13.89 a | 2.51 a | 3.92 a |
| | 16 | 5.02 a | 7.22 a | 11.1 a | 1.33 a | 2.08 a | 3.44 a | 4.68 a | 7.21 a | 1.97 a | 2.96 a | 5.16 a | 7.01 a | 10.93 a | 13.76 a | 2.35 a | 3.75 a |
| | 24 | 4.55 a | 6.74 a | 10.66 a | 1.05 a | 1.81 a | 3.23 a | 4.47 a | 7.02 a | 1.68 a | 2.68 a | 4.9 a | 6.76 a | 10.67 a | 13.49 a | 2.03 a | 3.42 a |
| 9 | 12 | 4.85 a | 6.86 a | 10.56 a | 1.35 a | 2.1 a | 3.47 a | 4.7 a | 7.23 a | 1.99 a | 2.98 a | 5.19 a | 7.04 a | 10.95 a | 13.79 a | 2.36 a | 3.75 a |
| | 16 | 4.57 a | 6.57 a | 10.29 a | 1.18 a | 1.93 a | 3.33 a | 4.57 a | 7.11 a | 1.81 a | 2.81 a | 5.02 a | 6.88 a | 10.79 a | 13.62 a | 2.17 a | 3.55 a |
| | 24 | 3.99 a | 6 a | 9.77 a | 0.83 a | 1.6 a | 3.05 a | 4.3 a | 6.86 a | 1.45 a | 2.46 a | 4.69 a | 6.56 a | 10.46 a | 13.28 a | 1.77 a | 3.14 a |
| 10 | 12 | 4.42 a | 6.24 a | 9.6 a | 1.23 a | 1.98 a | 3.37 a | 4.61 a | 7.14 a | 1.85 a | 2.84 a | 5.06 a | 6.93 a | 10.84 a | 13.67 a | 2.21 a | 3.57 a |
| | 16 | 4.08 a | 5.9 a | 9.3 a | 1.02 a | 1.78 a | 3.2 a | 4.44 a | 6.99 a | 1.63 a | 2.63 a | 4.85 a | 6.73 a | 10.64 a | 13.46 a | 1.96 a | 3.32 a |
| | 24 | 3.41 a | 5.24 a | 8.7 a | 0.59 a | 1.36 a | 2.86 a | 4.11 a | 6.69 a | 1.18 a | 2.2 a | 4.44 a | 6.34 a | 10.23 a | 13.04 a | 1.48 a | 2.81 a |
| 12 | 12 | 3.57 a | 5 a | 7.64 a | 0.95 a | 1.71 a | 3.15 a | 4.39 a | 6.94 a | 1.52 a | 2.51 a | 4.64 a | 6.54 a | 10.57 a | 13.39 a | 1.84 a | 3.14 a |
| | 16 | 3.14 b | 4.59 a | 7.27 a | 0.64 a | 1.41 a | 2.9 a | 4.15 a | 6.73 a | 1.21 a | 2.2 a | 4.35 a | 6.26 a | 10.28 a | 13.09 a | 1.5 a | 2.79 a |
| | 24 | 2.27 d | 3.76 c | 6.55 a | 0.02 c | 0.81 b | 2.41 a | 3.67 a | 6.29 a | 0.58 c | 1.6 a | 3.78 a | 5.71 a | 9.69 a | 12.49 a | 0.81 b | 2.09 a |
| 14 | 12 | 2.66 c | 3.79 b | 5.94 a | 0.61 b | 1.39 a | 2.88 a | 4.13 a | 6.71 a | 1.15 a | 2.11 a | 4.13 a | 5.95 a | 9.93 a | 13.07 a | 1.42 a | 2.65 a |
| | 16 | 2.16 d | 3.32 c | 5.54 b | 0.19 d | 0.98 b | 2.55 a | 3.8 a | 6.41 a | 0.73 c | 1.71 b | 3.75 a | 5.59 a | 9.54 a | 12.66 a | 0.97 b | 2.19 a |
| | 24 | 1.14 e | 2.39 e | 4.73 d | | 0.17 d | 1.89 c | 3.15 b | 5.82 a | | 0.92 d | 3.01 c | 4.87 a | 8.77 a | 11.84 a | 0.07 d | 1.27 c |
| 16 | 12 | 1.83 e | 2.78 d | 4.6 b | 0.22 d | 1.01 c | 2.58 b | 3.83 a | 6.44 a | 0.73 c | 1.67 b | 3.53 a | 5.23 a | 8.89 a | 11.74 a | 0.96 c | 2.1 a |
| | 16 | 1.28 e | 2.27 e | 4.16 d | | 0.48 d | 2.14 c | 3.4 b | 6.05 a | 0.22 d | 1.17 d | 3.07 c | 4.8 a | 8.42 a | 11.24 a | 0.4 d | 1.54 c |
| | 24 | 0.18 f | 1.26 f | 3.29 e | | | 1.28 e | 2.55 d | 5.28 c | | 0.18 e | 2.17 d | 3.92 c | 7.49 b | 10.26 a | | 0.4 d |

See Combined Axial and Lateral Load Table Notes

## 20 psf Lateral Load

| Wall Height (ft) | Spacing (in.) o.c. | 600S200-(mils) | | | | 600S250-(mils) | | | | | 600S300-(mils) | | | | 600S350-(mils) | | | |
|---|---|---|---|---|---|---|---|---|---|---|---|---|---|---|---|---|---|---|
| | | 50 ksi | | | | 33 ksi | 50 ksi | | | | 50 ksi | | | | 50 ksi | | | |
| | | 54 | 68 | 97 | 118 | 43 | 54 | 68 | 97 | 118 | 54 | 68 | 97 | 118 | 54 | 68 | 97 | 118 |
| 8 | 12 | 6.99 a | 9.42 a | 14.89 a | 19.18 a | 4.27 a | 7.24 a | 10.54 a | 17.49 a | 22.36 a | 7.55 a | 10.73 a | 18.8 a | 24.47 a | 9.83 a | 14.32 a | 23.41 a | 30.95 a |
| | 16 | 6.84 a | 9.26 a | 14.74 a | 19.02 a | 4.1 a | 7.08 a | 10.37 a | 17.3 a | 22.17 a | 7.39 a | 10.56 a | 18.62 a | 24.28 a | 9.67 a | 14.13 a | 23.21 a | 30.75 a |
| | 24 | 6.52 a | 8.94 a | 14.43 a | 18.69 a | 3.76 a | 6.77 a | 10.02 a | 16.93 a | 21.79 a | 7.07 a | 10.22 a | 18.25 a | 23.89 a | 9.33 a | 13.77 a | 22.81 a | 30.34 a |
| 9 | 12 | 6.78 a | 9.17 a | 14.58 a | 18.8 a | 4.1 a | 7.03 a | 10.26 a | 17.06 a | 21.85 a | 7.33 a | 10.46 a | 18.35 a | 23.93 a | 9.56 a | 13.97 a | 22.88 a | 30.13 a |
| | 16 | 6.58 a | 8.97 a | 14.39 a | 18.6 a | 3.89 a | 6.84 a | 10.04 a | 16.83 a | 21.61 a | 7.13 a | 10.25 a | 18.12 a | 23.69 a | 9.35 a | 13.74 a | 22.63 a | 29.88 a |
| | 24 | 6.19 a | 8.58 a | 14.01 a | 18.2 a | 3.46 a | 6.45 a | 9.61 a | 16.36 a | 21.13 a | 6.74 a | 9.82 a | 17.66 a | 23.21 a | 8.93 a | 13.29 a | 22.14 a | 29.37 a |
| 10 | 12 | 6.53 a | 8.89 a | 14.21 a | 18.35 a | 3.91 a | 6.8 a | 9.94 a | 16.56 a | 21.24 a | 7.09 a | 10.15 a | 17.82 a | 23.31 a | 9.25 a | 13.57 a | 22.3 a | 29.21 a |
| | 16 | 6.29 a | 8.64 a | 13.98 a | 18.1 a | 3.65 a | 6.56 a | 9.68 a | 16.28 a | 20.95 a | 6.85 a | 9.89 a | 17.54 a | 23.03 a | 8.99 a | 13.3 a | 22 a | 28.9 a |
| | 24 | 5.81 a | 8.16 a | 13.51 a | 17.61 a | 3.13 a | 6.08 a | 9.16 a | 15.72 a | 20.38 a | 6.37 a | 9.38 a | 16.99 a | 22.45 a | 8.48 a | 12.75 a | 21.4 a | 28.29 a |
| 12 | 12 | 5.94 a | 8.19 a | 13.29 a | 17.2 a | 3.48 a | 6.24 a | 9.2 a | 15.37 a | 19.78 a | 6.52 a | 9.47 a | 16.6 a | 21.89 a | 8.54 a | 12.67 a | 20.99 a | 27.08 a |
| | 16 | 5.61 a | 7.86 a | 12.97 a | 16.86 a | 3.12 a | 5.91 a | 8.84 a | 14.98 a | 19.38 a | 6.19 a | 9.12 a | 16.21 a | 21.49 a | 8.19 a | 12.29 a | 20.57 a | 26.66 a |
| | 24 | 4.95 a | 7.2 a | 12.33 a | 16.19 a | 2.38 a | 5.25 a | 8.12 a | 14.22 a | 18.59 a | 5.52 a | 8.41 a | 15.45 a | 20.7 a | 7.49 a | 11.53 a | 19.75 a | 25.84 a |
| 14 | 12 | 5.24 a | 7.35 a | 12.12 a | 15.73 a | 2.99 a | 5.63 a | 8.34 a | 13.94 a | 18.01 a | 5.86 a | 8.7 a | 15.19 a | 20.32 a | 7.73 a | 11.63 a | 19.32 a | 24.66 a |
| | 16 | 4.81 a | 6.92 a | 11.72 a | 15.31 a | 2.5 a | 5.2 a | 7.87 a | 13.46 a | 17.51 a | 5.43 a | 8.24 a | 14.7 a | 19.81 a | 7.28 a | 11.14 a | 18.79 a | 24.14 a |
| | 24 | 3.97 b | 6.08 a | 10.9 a | 14.45 a | 1.53 b | 4.34 a | 6.95 a | 12.48 a | 16.51 a | 4.57 a | 7.31 a | 13.72 a | 18.78 a | 6.37 a | 10.16 a | 17.74 a | 23.1 a |
| 16 | 12 | 4.46 a | 6.4 a | 10.79 a | 14.04 a | 2.44 a | 5 a | 7.42 a | 12.37 a | 16.05 a | 5.15 a | 7.85 a | 13.68 a | 18.21 a | 6.86 a | 10.49 a | 17.22 a | 22.07 a |
| | 16 | 3.95 b | 5.89 a | 10.3 a | 13.53 a | 1.83 b | 4.47 a | 6.86 a | 11.79 a | 15.45 a | 4.62 a | 7.27 a | 13.09 a | 17.59 a | 6.3 a | 9.89 a | 16.59 a | 21.45 a |
| | 24 | 2.94 d | 4.87 c | 9.32 a | 12.51 a | 0.62 d | 3.39 c | 5.72 b | 10.62 a | 14.26 a | 3.56 c | 6.12 b | 11.91 a | 16.36 a | 5.2 b | 8.7 a | 15.32 a | 20.21 a |

## 20 psf Lateral Load

| Wall Height (ft) | Spacing (in.) o.c. | 800S137-(mils) | | | | | 800S162-(mils) | | | | | | 800S200-(mils) | | | | | |
|---|---|---|---|---|---|---|---|---|---|---|---|---|---|---|---|---|---|---|
| | | 33 ksi | | 50 ksi | | | 33 ksi | | 50 ksi | | | | 33 ksi | | 50 ksi | | | |
| | | 33 | 43 | 54 | 68 | 97 | 33 | 43 | 54 | 68 | 97 | 118 | 33 | 43 | 54 | 68 | 97 | 118 |
| 8 | 12 | 1.44 a* | 2.22 a | 3.39 a | 4.57 a | 7.09 a | 2.07 a* | 3.1 a | 5.2 a | 7.02 a | 11.05 a | 14.11 a | 2.62 a* | 4.23 a | 7.49 a | 10.02 a | 15.72 a | 20.18 a |
| | 16 | 1.33 a* | 2.13 a | 3.32 a | 4.5 a | 7.02 a | 1.93 a* | 2.99 a | 5.11 a | 6.92 a | 10.96 a | 14.02 a | 2.47 a* | 4.11 a | 7.38 a | 9.91 a | 15.61 a | 20.07 a |
| | 24 | 1.1 a* | 1.94 a | 3.17 a | 4.36 a | 6.9 a | 1.65 a* | 2.77 a | 4.91 a | 6.73 a | 10.79 a | 13.85 a | 2.16 a* | 3.88 a | 7.15 a | 9.69 a | 15.4 a | 19.85 a |
| 9 | 12 | 1.35 a* | 2.15 a | 3.34 a | 4.52 a | 7.04 a | 1.96 a* | 3.01 a | 5.13 a | 6.94 a | 10.98 a | 14.04 a | 2.5 a* | 4.14 a | 7.4 a | 9.93 a | 15.63 a | 20.09 a |
| | 16 | 1.21 a* | 2.03 a | 3.24 a | 4.43 a | 6.96 a | 1.78 a* | 2.87 a | 5 a | 6.82 a | 10.87 a | 13.93 a | 2.31 a* | 3.99 a | 7.26 a | 9.79 a | 15.5 a | 19.95 a |
| | 24 | 0.92 a* | 1.8 a | 3.06 a | 4.25 a | 6.79 a | 1.43 a* | 2.59 a | 4.76 a | 6.58 a | 10.65 a | 13.71 a | 1.93 a* | 3.7 a | 6.97 a | 9.51 a | 15.23 a | 19.67 a |
| 10 | 12 | 1.25 a* | 2.06 a | 3.27 a | 4.46 a | 6.98 a | 1.83 a* | 2.92 a | 5.04 a | 6.86 a | 10.9 a | 13.96 a | 2.36 a* | 4.03 a | 7.3 a | 9.83 a | 15.54 a | 20 a |
| | 16 | 1.07 a* | 1.92 a | 3.16 a | 4.35 a | 6.88 a | 1.62 a* | 2.74 a | 4.89 a | 6.71 a | 10.77 a | 13.83 a | 2.13 a* | 3.85 a | 7.12 a | 9.66 a | 15.37 a | 19.82 a |
| | 24 | 0.72 a* | 1.63 a | 2.93 a | 4.12 a | 6.68 a | 1.18 a* | 2.39 a | 4.58 a | 6.41 a | 10.49 a | 13.55 a | 1.66 a* | 3.49 a | 6.77 a | 9.31 a | 15.04 a | 19.47 a |
| 12 | 12 | 1.02 a* | 1.87 a | 3.12 a | 4.31 a | 6.85 a | 1.55 a* | 2.69 a | 4.84 a | 6.66 a | 10.72 a | 13.78 a | 2.05 a* | 3.79 a | 7.06 a | 9.6 a | 15.32 a | 19.76 a |
| | 16 | 0.76 a* | 1.67 a | 2.96 a | 4.15 a | 6.7 a | 1.23 a* | 2.44 a | 4.62 a | 6.45 a | 10.53 a | 13.59 a | 1.71 a* | 3.53 a | 6.81 a | 9.35 a | 15.08 a | 19.51 a |
| | 24 | 0.24 a* | 1.25 a | 2.63 a | 3.83 a | 6.42 a | 0.61 a* | 1.94 a | 4.18 a | 6.02 a | 10.13 a | 13.19 a | 1.03 a* | 3.01 a | 6.3 a | 8.85 a | 14.6 a | 19.01 a |
| 14 | 12 | 0.74 a* | 1.65 a | 2.94 a | 4.14 a | 6.69 a | 1.21 a* | 2.42 a | 4.6 a | 6.43 a | 10.51 a | 13.57 a | 1.66 a* | 3.45 a | 6.63 a | 9.16 a | 14.97 a | 19.49 a |
| | 16 | 0.39 a* | 1.37 a | 2.72 a | 3.92 a | 6.5 a | 0.78 a* | 2.07 a | 4.3 a | 6.14 a | 10.24 a | 13.3 a | 1.21 a* | 3.11 a | 6.29 a | 8.82 a | 14.65 a | 19.15 a |
| | 24 | | 0.8 a | 2.27 a | 3.49 a | 6.11 a | | 1.39 a | 3.7 a | 5.56 a | 9.7 a | 12.76 a | 0.3 a* | 2.42 a | 5.62 a | 8.15 a | 14 a | 18.47 a |
| 16 | 12 | 0.42 a* | 1.39 a | 2.74 a | 3.94 a | 6.51 a | 0.82 a* | 2.1 a | 4.33 a | 6.17 a | 10.26 a | 13.32 a | 1.22 a* | 3.06 a | 6.1 a | 8.54 a | 14.17 a | 18.63 a |
| | 16 | | 1.02 a | 2.44 a | 3.66 a | 6.26 a | 0.26 b* | 1.66 a | 3.94 a | 5.79 a | 9.91 a | 12.97 a | 0.64 a* | 2.62 a | 5.67 a | 8.12 a | 13.76 a | 18.19 a |
| | 24 | | 0.28 c | 1.86 b | 3.09 a | 5.75 a | | 0.77 b | 3.16 a | 5.03 a | 9.21 a | 12.27 a | | 1.74 a | 4.82 a | 7.28 a | 12.94 a | 17.33 a |

See Combined Axial and Lateral Load Table Notes

# 20 psf Lateral Load

| Wall Height (ft) | Spacing (in.) o.c. | 800S250-(mils) | | | | | 800S300-(mils) | | | | 800S350-(mils) | | | |
|---|---|---|---|---|---|---|---|---|---|---|---|---|---|---|
| | | 33 ksi | 50 ksi | | | | 50 ksi | | | | 50 ksi | | | |
| | | 43 | 54 | 68 | 97 | 118 | 54 | 68 | 97 | 118 | 54 | 68 | 97 | 118 |
| 8 | 12 | 4.61 a | 7.86 a | 11.46 a | 19.24 a | 25.11 a | 8.2 a | 11.73 a | 21.01 a | 27.47 a | 10.64 a | 15.44 a | 25.53 a | 33.97 a |
| | 16 | 4.49 a | 7.75 a | 11.33 a | 19.11 a | 24.97 a | 8.08 a | 11.61 a | 20.87 a | 27.33 a | 10.51 a | 15.31 a | 25.38 a | 33.82 a |
| | 24 | 4.24 a | 7.51 a | 11.09 a | 18.83 a | 24.68 a | 7.83 a | 11.37 a | 20.59 a | 27.03 a | 10.26 a | 15.05 a | 25.09 a | 33.51 a |
| 9 | 12 | 4.5 a | 7.74 a | 11.32 a | 19.06 a | 24.86 a | 8.06 a | 11.57 a | 20.75 a | 27.17 a | 10.47 a | 15.24 a | 25.28 a | 33.62 a |
| | 16 | 4.34 a | 7.59 a | 11.16 a | 18.89 a | 24.67 a | 7.91 a | 11.42 a | 20.58 a | 26.99 a | 10.3 a | 15.07 a | 25.1 a | 33.43 a |
| | 24 | 4.03 a | 7.29 a | 10.85 a | 18.54 a | 24.31 a | 7.6 a | 11.11 a | 20.23 a | 26.62 a | 9.98 a | 14.74 a | 24.73 a | 33.04 a |
| 10 | 12 | 4.37 a | 7.59 a | 11.16 a | 18.84 a | 24.55 a | 7.9 a | 11.39 a | 20.45 a | 26.82 a | 10.26 a | 15 a | 24.95 a | 33.21 a |
| | 16 | 4.18 a | 7.41 a | 10.97 a | 18.63 a | 24.33 a | 7.71 a | 11.2 a | 20.23 a | 26.6 a | 10.07 a | 14.8 a | 24.72 a | 32.98 a |
| | 24 | 3.79 a | 7.04 a | 10.59 a | 18.21 a | 23.88 a | 7.33 a | 10.82 a | 19.81 a | 26.15 a | 9.67 a | 14.4 a | 24.27 a | 32.5 a |
| 12 | 12 | 4.08 a | 7.24 a | 10.77 a | 18.31 a | 23.77 a | 7.52 a | 10.94 a | 19.69 a | 25.93 a | 9.78 a | 14.45 a | 24.06 a | 32.24 a |
| | 16 | 3.8 a | 6.98 a | 10.5 a | 18.01 a | 23.45 a | 7.25 a | 10.67 a | 19.39 a | 25.62 a | 9.51 a | 14.16 a | 23.74 a | 31.91 a |
| | 24 | 3.25 a | 6.46 a | 9.96 a | 17.41 a | 22.82 a | 6.71 a | 10.14 a | 18.79 a | 24.99 a | 8.95 a | 13.59 a | 23.11 a | 31.24 a |
| 14 | 12 | 3.72 a | 6.8 a | 10.2 a | 17.45 a | 22.71 a | 7.05 a | 10.38 a | 18.74 a | 24.8 a | 9.21 a | 13.75 a | 23 a | 30.78 a |
| | 16 | 3.35 a | 6.46 a | 9.84 a | 17.05 a | 22.3 a | 6.69 a | 10.02 a | 18.34 a | 24.38 a | 8.84 a | 13.38 a | 22.58 a | 30.34 a |
| | 24 | 2.61 a | 5.77 a | 9.12 a | 16.25 a | 21.47 a | 5.98 a | 9.32 a | 17.55 a | 23.55 a | 8.1 a | 12.62 a | 21.74 a | 29.47 a |
| 16 | 12 | 3.31 a | 6.28 a | 9.52 a | 16.36 a | 21.39 a | 6.51 a | 9.72 a | 17.61 a | 23.47 a | 8.57 a | 12.95 a | 21.82 a | 28.91 a |
| | 16 | 2.84 a | 5.85 a | 9.06 a | 15.87 a | 20.87 a | 6.06 a | 9.27 a | 17.11 a | 22.94 a | 8.1 a | 12.48 a | 21.29 a | 28.37 a |
| | 24 | 1.89 a | 4.98 a | 8.15 a | 14.87 a | 19.84 a | 5.15 a | 8.38 a | 16.12 a | 21.9 a | 7.17 a | 11.52 a | 20.23 a | 27.28 a |

See Combined Axial and Lateral Load Table Notes



## 25 psf Lateral Load

| Wall Height (ft) | Spacing (in.) o.c. | 362S137-(mils) | | | | 362S162-(mils) | | | | | 362S200-(mils) | | | | | 362S250-(mils) | | | |
|---|---|---|---|---|---|---|---|---|---|---|---|---|---|---|---|---|---|---|---|
| | | 33 ksi | | 50 ksi | | 33 ksi | | 50 ksi | | | 33 ksi | | 50 ksi | | | 33 ksi | 50 ksi | | |
| | | 33 | 43 | 54 | 68 | 33 | 43 | 54 | 68 | 97 | 97 | 33 | 54 | 68 | 97 | 43 | 54 | 68 | 97 |
| 8 | 12 | 0.8 a | 1.41 a | 2.58 a | 3.58 a | 1.14 a | 1.83 a | 3.4 a | 4.58 a | 6.95 a | 1.47 a | 2.49 a | 4.38 a | 7.21 a | 8.64 a | 2.89 a | 5.01 a | 6.81 a | 9.92 a |
| | 16 | 0.53 b | 1.14 a | 2.36 a | 3.39 a | 0.84 a | 1.54 a | 3.16 a | 4.37 a | 6.73 a | 1.14 a | 2.17 a | 4.11 a | 6.88 a | 8.41 a | 2.54 a | 4.71 a | 6.52 a | 9.65 a |
| | 24 | | 0.58 c | 1.92 b | 3 a | 0.24 c | 0.97 b | 2.67 a | 3.93 a | 6.28 a | 0.48 c | 1.53 a | 3.55 a | 6.23 a | 7.94 a | 1.85 a | 4.11 a | 5.93 a | 9.11 a |
| 9 | 12 | 0.57 c | 1.16 a | 2.29 a | 3.26 a | 0.87 b | 1.54 a | 3.04 a | 4.16 a | 6.34 a | 1.17 a | 2.15 a | 3.92 a | 6.55 a | 7.88 a | 2.54 a | 4.56 a | 6.16 a | 9.06 a |
| | 16 | 0.23 d | 0.82 c | 2.02 b | 3.03 a | 0.5 c | 1.19 b | 2.75 a | 3.89 a | 6.08 a | 0.76 c | 1.76 a | 3.59 a | 6.16 a | 7.61 a | 2.11 a | 4.2 a | 5.81 a | 8.74 a |
| | 24 | | 0.14 d | 1.49 d | 2.56 c | | 0.49 d | 2.16 c | 3.37 b | 5.56 a | | 0.98 c | 2.93 b | 5.39 a | 7.06 a | 1.26 b | 3.47 a | 5.11 a | 8.1 a |
| 10 | 12 | 0.32 d | 0.89 c | 1.98 b | 2.9 a | 0.59 c | 1.16 b | 2.66 a | 3.7 a | 5.69 a | 0.85 c | 1.79 a | 3.44 a | 5.82 a | 7.08 a | 2.16 a | 4.08 a | 5.48 a | 8.17 a |
| | 16 | | 0.48 d | 1.67 c | 2.64 b | 0.15 d | 0.78 d | 2.32 c | 3.4 a | 5.39 a | 0.37 d | 1.33 c | 3.06 b | 5.37 a | 6.77 a | 1.65 b | 3.65 a | 5.08 a | 7.8 a |
| | 24 | | | 1.05 e | 2.1 d | | | 1.65 d | 2.8 c | 4.8 b | | 0.41 d | 2.29 d | 4.49 c | 6.14 a | 0.64 d | 2.8 c | 4.28 b | 7.07 a |
| 12 | 12 | | 0.32 e | 1.36 d | 2.18 c | 0.01 e | 0.65 d | 1.86 d | 2.76 c | 4.35 a | 0.2 e | 1.06 d | 2.44 c | 4.32 b | 5.45 a | 1.34 c | 2.94 b | 4.11 a | 6.35 a |
| | 16 | | | 0.97 e | 1.85 d | | 0.09 e | 1.45 e | 2.4 d | 4 c | | 0.47 e | 1.99 d | 3.79 c | 5.08 b | 0.68 d | 2.43 d | 3.63 c | 5.91 a |
| | 24 | | | 0.2 f | 1.19 e | | | 0.63 f | 1.68 e | 3.29 d | | | 1.07 e | 2.74 e | 4.35 d | | 1.4 e | 2.68 d | 5.04 c |
| 14 | 12 | | | 0.79 e | 1.52 e | | 0.04 f | 1.17 e | 1.95 e | 3.23 d | | 0.36 e | 1.6 e | 3.05 d | 4.1 c | 0.55 e | 1.96 d | 2.95 c | 4.8 b |
| | 16 | | | 0.35 f | 1.15 f | | | 0.71 f | 1.55 e | 2.84 e | | | 1.09 e | 2.47 e | 3.69 d | | 1.39 e | 2.41 d | 4.31 c |
| | 24 | | | | 0.39 f | | | | 0.74 f | 2.06 f | | | 0.07 f | 1.3 f | 2.88 e | | 0.24 f | 1.35 e | 3.35 e |
| 16 | 12 | | | 0.32 f | 0.98 f | | | 0.62 f | 1.31 f | 2.34 e | | | 0.93 f | 2.06 e | 3.05 d | | 1.18 e | 2.03 e | 3.58 d |
| | 16 | | | | 0.57 f | | | 0.12 f | 0.87 f | 1.93 f | | | 0.38 f | 1.44 f | 2.61 e | | 0.57 f | 1.46 e | 3.06 e |
| | 24 | | | | | | | | | 1.09 f | | | | 0.19 f | 1.74 f | | | 0.31 f | 2.02 f |

## 25 psf Lateral Load

| Wall Height (ft) | Spacing (in.) o.c. | 362S300-(mils) | | | 600S137-(mils) | | | | | 600S162-(mils) | | | | | | 600S200-(mils) | |
|---|---|---|---|---|---|---|---|---|---|---|---|---|---|---|---|---|---|
| | | 50 ksi | | | 33 ksi | | 50 ksi | | | 33 ksi | | 50 ksi | | | | 33 ksi | |
| | | 54 | 68 | 97 | 33 | 43 | 54 | 68 | 97 | 33 | 43 | 54 | 68 | 97 | 118 | 33 | 43 |
| 8 | 12 | 5.08 a | 7.28 a | 11.16 a | 1.36 a | 2.11 a | 3.47 a | 4.71 a | 7.23 a | 2.01 a | 2.99 a | 5.2 a | 7.05 a | 10.96 a | 13.79 a | 2.39 a | 3.79 a |
| | 16 | 4.79 a | 6.98 a | 10.88 a | 1.19 a | 1.94 a | 3.34 a | 4.57 a | 7.11 a | 1.83 a | 2.82 a | 5.03 a | 6.89 a | 10.8 a | 13.63 a | 2.19 a | 3.59 a |
| | 24 | 4.2 a | 6.38 a | 10.33 a | 0.84 a | 1.61 a | 3.06 a | 4.31 a | 6.87 a | 1.47 a | 2.47 a | 4.7 a | 6.58 a | 10.47 a | 13.29 a | 1.79 a | 3.18 a |
| 9 | 12 | 4.64 a | 6.64 a | 10.36 a | 1.22 a | 1.98 a | 3.36 a | 4.6 a | 7.14 a | 1.85 a | 2.85 a | 5.06 a | 6.92 a | 10.83 a | 13.66 a | 2.22 a | 3.6 a |
| | 16 | 4.28 a | 6.29 a | 10.03 a | 1.01 a | 1.77 a | 3.19 a | 4.43 a | 6.98 a | 1.63 a | 2.63 a | 4.86 a | 6.72 a | 10.63 a | 13.45 a | 1.97 a | 3.34 a |
| | 24 | 3.56 a | 5.57 a | 9.37 a | 0.57 a | 1.35 a | 2.85 a | 4.09 a | 6.68 a | 1.17 a | 2.2 a | 4.44 a | 6.33 a | 10.21 a | 13.03 a | 1.47 a | 2.83 a |
| 10 | 12 | 4.17 a | 5.99 a | 9.38 a | 1.07 a | 1.83 a | 3.24 a | 4.48 a | 7.03 a | 1.68 a | 2.68 a | 4.9 a | 6.78 a | 10.69 a | 13.51 a | 2.02 a | 3.38 a |
| | 16 | 3.75 a | 5.57 a | 9 a | 0.8 a | 1.57 a | 3.03 a | 4.27 a | 6.84 a | 1.4 a | 2.41 a | 4.65 a | 6.54 a | 10.43 a | 13.25 a | 1.72 a | 3.07 a |
| | 24 | 2.91 c | 4.74 a | 8.24 a | 0.26 b | 1.05 a | 2.61 a | 3.86 a | 6.46 a | 0.85 a | 1.88 a | 4.13 a | 6.05 a | 9.93 a | 12.73 a | 1.11 a | 2.44 a |
| 12 | 12 | 3.25 b | 4.69 a | 7.36 a | 0.72 a | 1.49 a | 2.96 a | 4.21 a | 6.78 a | 1.29 a | 2.28 a | 4.43 a | 6.33 a | 10.35 a | 13.17 a | 1.58 a | 2.88 a |
| | 16 | 2.71 c | 4.18 b | 6.91 a | 0.33 b | 1.11 a | 2.66 a | 3.91 a | 6.51 a | 0.9 b | 1.9 a | 4.07 a | 5.99 a | 9.99 a | 12.79 a | 1.16 a | 2.44 a |
| | 24 | 1.62 e | 3.14 d | 6.01 b | | 0.36 c | 2.05 b | 3.31 a | 5.97 a | 0.12 d | 1.15 b | 3.35 a | 5.3 a | 9.26 a | 12.04 a | 0.3 c | 1.56 b |
| 14 | 12 | 2.28 d | 3.44 c | 5.64 a | 0.3 c | 1.08 b | 2.63 a | 3.88 a | 6.49 a | 0.84 c | 1.81 a | 3.85 a | 5.68 a | 9.64 a | 12.76 a | 1.08 b | 2.3 a |
| | 16 | 1.65 e | 2.85 d | 5.13 c | | 0.57 c | 2.22 b | 3.47 a | 6.12 a | 0.32 d | 1.32 c | 3.38 b | 5.23 a | 9.16 a | 12.25 a | 0.52 c | 1.73 b |
| | 24 | 0.38 f | 1.68 e | 4.13 d | | | 1.39 d | 2.66 c | 5.38 b | | 0.32 d | 2.45 d | 4.33 c | 8.2 a | 11.23 a | | 0.58 d |
| 16 | 12 | 1.42 e | 2.4 d | 4.27 c | | 0.61 d | 2.25 c | 3.51 b | 6.15 a | 0.35 d | 1.29 c | 3.19 b | 4.91 a | 8.54 a | 11.37 a | 0.54 d | 1.68 c |
| | 16 | 0.73 f | 1.77 e | 3.73 d | | | 1.71 d | 2.97 c | 5.67 b | | 0.67 d | 2.62 d | 4.36 c | 7.96 a | 10.75 a | | 0.97 d |
| | 24 | | 0.5 f | 2.64 e | | | 0.63 e | 1.91 e | 4.71 d | | | 1.49 e | 3.27 d | 6.79 c | 9.52 b | | |

See Combined Axial and Lateral Load Table Notes

## 25 psf Lateral Load

| Wall Height (ft) | Spacing (in.) o.c. | 600S200-(mils) | | | | 600S250-(mils) | | | | | 600S300-(mils) | | | | 600S350-(mils) | | | |
|---|---|---|---|---|---|---|---|---|---|---|---|---|---|---|---|---|---|---|
| | | 50 ksi | | | | 33 ksi | 50 ksi | | | | 50 ksi | | | | 50 ksi | | | |
| | | 54 | 68 | 97 | 118 | 43 | 54 | 68 | 97 | 118 | 54 | 68 | 97 | 118 | 54 | 68 | 97 | 118 |
| 8 | 12 | 6.88 a | 9.3 a | 14.78 a | 19.06 a | 4.14 a | 7.12 a | 10.41 a | 17.35 a | 22.22 a | 7.43 a | 10.6 a | 18.67 a | 24.32 a | 9.71 a | 14.18 a | 23.26 a | 30.8 a |
| | 16 | 6.68 a | 9.1 a | 14.59 a | 18.86 a | 3.93 a | 6.93 a | 10.19 a | 17.11 a | 21.98 a | 7.23 a | 10.39 a | 18.43 a | 24.08 a | 9.5 a | 13.95 a | 23.01 a | 30.54 a |
| | 24 | 6.28 a | 8.7 a | 14.2 a | 18.45 a | 3.5 a | 6.54 a | 9.76 a | 16.65 a | 21.5 a | 6.84 a | 9.97 a | 17.97 a | 23.6 a | 9.08 a | 13.5 a | 22.51 a | 30.03 a |
| 9 | 12 | 6.63 a | 9.02 a | 14.44 a | 18.65 a | 3.94 a | 6.89 a | 10.1 a | 16.89 a | 21.67 a | 7.18 a | 10.3 a | 18.17 a | 23.75 a | 9.4 a | 13.8 a | 22.7 a | 29.94 a |
| | 16 | 6.38 a | 8.77 a | 14.2 a | 18.4 a | 3.67 a | 6.64 a | 9.83 a | 16.59 a | 21.37 a | 6.94 a | 10.04 a | 17.89 a | 23.45 a | 9.14 a | 13.52 a | 22.39 a | 29.63 a |
| | 24 | 5.89 a | 8.28 a | 13.72 a | 17.89 a | 3.14 a | 6.15 a | 9.29 a | 16.01 a | 20.77 a | 6.44 a | 9.51 a | 17.31 a | 22.85 a | 8.62 a | 12.95 a | 21.77 a | 28.99 a |
| 10 | 12 | 6.35 a | 8.7 a | 14.04 a | 18.16 a | 3.72 a | 6.62 a | 9.75 a | 16.35 a | 21.03 a | 6.91 a | 9.96 a | 17.61 a | 23.1 a | 9.06 a | 13.37 a | 22.07 a | 28.98 a |
| | 16 | 6.05 a | 8.4 a | 13.75 a | 17.86 a | 3.39 a | 6.32 a | 9.42 a | 16 a | 20.67 a | 6.61 a | 9.64 a | 17.27 a | 22.74 a | 8.74 a | 13.03 a | 21.7 a | 28.6 a |
| | 24 | 5.45 a | 7.8 a | 13.17 a | 17.25 a | 2.74 a | 5.73 a | 8.77 a | 15.3 a | 19.94 a | 6.01 a | 9 a | 16.57 a | 22.01 a | 8.1 a | 12.34 a | 20.95 a | 27.83 a |
| 12 | 12 | 5.69 a | 7.94 a | 13.05 a | 16.94 a | 3.21 a | 5.99 a | 8.93 a | 15.08 a | 19.48 a | 6.27 a | 9.21 a | 16.31 a | 21.59 a | 8.27 a | 12.38 a | 20.68 a | 26.77 a |
| | 16 | 5.28 a | 7.53 a | 12.65 a | 16.52 a | 2.75 a | 5.58 a | 8.48 a | 14.6 a | 18.99 a | 5.85 a | 8.76 a | 15.83 a | 21.1 a | 7.84 a | 11.91 a | 20.16 a | 26.25 a |
| | 24 | 4.45 a | 6.7 a | 11.85 a | 15.69 a | 1.83 a | 4.76 a | 7.58 a | 13.64 a | 18 a | 5.02 a | 7.87 a | 14.88 a | 20.1 a | 6.96 a | 10.96 a | 19.13 a | 25.22 a |
| 14 | 12 | 4.92 a | 7.03 a | 11.82 a | 15.41 a | 2.62 a | 5.31 a | 7.99 a | 13.58 a | 17.64 a | 5.54 a | 8.35 a | 14.82 a | 19.94 a | 7.39 a | 11.26 a | 18.93 a | 24.27 a |
| | 16 | 4.39 a | 6.5 a | 11.31 a | 14.88 a | 2.02 a | 4.77 a | 7.41 a | 12.97 a | 17.01 a | 5 a | 7.77 a | 14.21 a | 19.3 a | 6.83 a | 10.65 a | 18.27 a | 23.62 a |
| | 24 | 3.33 c | 5.44 b | 10.29 a | 13.81 a | 0.81 c | 3.7 b | 6.25 a | 11.75 a | 15.76 a | 3.92 b | 6.61 a | 12.99 a | 18.01 a | 5.7 a | 9.43 a | 16.94 a | 22.32 a |
| 16 | 12 | 4.08 a | 6.02 a | 10.42 a | 13.66 a | 1.98 b | 4.6 a | 7 a | 11.93 a | 15.6 a | 4.75 a | 7.42 a | 13.24 a | 17.75 a | 6.44 a | 10.04 a | 16.74 a | 21.6 a |
| | 16 | 3.44 c | 5.38 b | 9.81 a | 13.02 a | 1.22 c | 3.93 b | 6.29 a | 11.2 a | 14.86 a | 4.09 b | 6.7 a | 12.5 a | 16.98 a | 5.75 a | 9.29 a | 15.95 a | 20.83 a |
| | 24 | 2.17 d | 4.11 d | 8.59 b | 11.74 a | | 2.59 d | 4.87 c | 9.74 b | 13.36 a | 2.76 d | 5.26 c | 11.03 a | 15.44 a | 4.37 c | 7.8 b | 14.37 a | 19.27 a |

## 25 psf Lateral Load

| Wall Height (ft) | Spacing (in.) o.c. | 800S137-(mils) | | | | | 800S162-(mils) | | | | | | 800S200-(mils) | | | | | |
|---|---|---|---|---|---|---|---|---|---|---|---|---|---|---|---|---|---|---|
| | | 33 ksi | | 50 ksi | | | 33 ksi | | 50 ksi | | | | 33 ksi | | 50 ksi | | | |
| | | 33 | 43 | 54 | 68 | 97 | 33 | 43 | 54 | 68 | 97 | 118 | 33 | 43 | 54 | 68 | 97 | 118 |
| 8 | 12 | 1.36 a* | 2.15 a | 3.34 a | 4.52 a | 7.04 a | 1.96 a* | 3.02 a | 5.13 a | 6.95 a | 10.98 a | 14.05 a | 2.5 a* | 4.14 a | 7.41 a | 9.94 a | 15.64 a | 20.1 a |
| | 16 | 1.22 a* | 2.03 a | 3.25 a | 4.43 a | 6.96 a | 1.79 a* | 2.88 a | 5.01 a | 6.83 a | 10.88 a | 13.94 a | 2.32 a* | 4 a | 7.26 a | 9.8 a | 15.5 a | 19.96 a |
| | 24 | 0.93 a* | 1.8 a | 3.06 a | 4.26 a | 6.8 a | 1.44 a* | 2.6 a | 4.76 a | 6.59 a | 10.66 a | 13.72 a | 1.94 a* | 3.71 a | 6.98 a | 9.52 a | 15.24 a | 19.68 a |
| 9 | 12 | 1.24 a* | 2.06 a | 3.27 a | 4.45 a | 6.98 a | 1.83 a* | 2.91 a | 5.03 a | 6.85 a | 10.9 a | 13.96 a | 2.35 a* | 4.03 a | 7.29 a | 9.83 a | 15.53 a | 19.99 a |
| | 16 | 1.06 a* | 1.91 a | 3.15 a | 4.34 a | 6.87 a | 1.61 a* | 2.73 a | 4.88 a | 6.7 a | 10.76 a | 13.82 a | 2.12 a* | 3.85 a | 7.12 a | 9.65 a | 15.36 a | 19.81 a |
| | 24 | 0.7 a* | 1.62 a | 2.92 a | 4.12 a | 6.67 a | 1.17 a* | 2.38 a | 4.57 a | 6.4 a | 10.48 a | 13.54 a | 1.64 a* | 3.48 a | 6.76 a | 9.3 a | 15.02 a | 19.46 a |
| 10 | 12 | 1.12 a* | 1.96 a | 3.18 a | 4.37 a | 6.9 a | 1.67 a* | 2.79 a | 4.92 a | 6.75 a | 10.8 a | 13.86 a | 2.19 a* | 3.9 a | 7.17 a | 9.7 a | 15.41 a | 19.86 a |
| | 16 | 0.89 a* | 1.78 a | 3.04 a | 4.23 a | 6.78 a | 1.4 a* | 2.57 a | 4.73 a | 6.56 a | 10.63 a | 13.69 a | 1.89 a* | 3.67 a | 6.95 a | 9.48 a | 15.2 a | 19.65 a |
| | 24 | 0.45 a* | 1.41 a | 2.76 a | 3.96 a | 6.53 a | 0.86 a* | 2.13 a | 4.35 a | 6.19 a | 10.29 a | 13.35 a | 1.31 a* | 3.23 a | 6.51 a | 9.05 a | 14.79 a | 19.21 a |
| 12 | 12 | 0.82 a* | 1.72 a | 3 a | 4.19 a | 6.74 a | 1.31 a* | 2.5 a | 4.67 a | 6.5 a | 10.57 a | 13.64 a | 1.79 a* | 3.59 a | 6.87 a | 9.41 a | 15.14 a | 19.58 a |
| | 16 | 0.5 a* | 1.46 a | 2.79 a | 3.99 a | 6.56 a | 0.92 a* | 2.19 a | 4.4 a | 6.24 a | 10.33 a | 13.39 a | 1.37 a* | 3.27 a | 6.55 a | 9.1 a | 14.84 a | 19.26 a |
| | 24 | | 0.94 a | 2.38 a | 3.6 a | 6.2 a | 0.14 a* | 1.56 a | 3.85 a | 5.7 a | 9.84 a | 12.9 a | 0.53 a* | 2.63 a | 5.92 a | 8.48 a | 14.24 a | 18.64 a |
| 14 | 12 | 0.47 a* | 1.44 a | 2.77 a | 3.98 a | 6.55 a | 0.89 a* | 2.16 a | 4.38 a | 6.21 a | 10.31 a | 13.37 a | 1.32 a* | 3.19 a | 6.38 a | 8.91 a | 14.73 a | 19.24 a |
| | 16 | 0.04 a* | 1.08 a | 2.49 a | 3.71 a | 6.3 a | 0.36 a* | 1.73 a | 4 a | 5.85 a | 9.97 a | 13.03 a | 0.75 a* | 2.76 a | 5.96 a | 8.49 a | 14.32 a | 18.81 a |
| | 24 | | 0.38 b | 1.94 a | 3.17 a | 5.82 a | | 0.88 a | 3.26 a | 5.13 a | 9.3 a | 12.36 a | | 1.9 a | 5.11 a | 7.65 a | 13.51 a | 17.96 a |
| 16 | 12 | 0.07 b* | 1.11 a | 2.52 a | 3.73 a | 6.32 a | 0.4 a* | 1.77 a | 4.03 a | 5.88 a | 10 a | 13.06 a | 0.79 a* | 2.73 a | 5.78 a | 8.23 a | 13.86 a | 18.3 a |
| | 16 | | 0.65 b | 2.15 a | 3.38 a | 6.01 a | | 1.21 a | 3.55 a | 5.41 a | 9.56 a | 12.62 a | 0.06 b* | 2.18 a | 5.25 a | 7.7 a | 13.35 a | 17.76 a |
| | 24 | | | 1.42 c | 2.67 b | 5.37 a | | 0.1 c | 2.57 b | 4.46 a | 8.69 a | 11.75 a | | 1.08 c | 4.18 a | 6.65 a | 12.33 a | 16.68 a |

See Combined Axial and Lateral Load Table Notes

# 25 psf Lateral Load

| Wall Height (ft) | Spacing (in.) o.c. | 800S250-(mils) | | | | | 800S300-(mils) | | | | 800S350-(mils) | | | |
|---|---|---|---|---|---|---|---|---|---|---|---|---|---|---|
| | | 33 ksi | 50 ksi | | | | 50 ksi | | | | 50 ksi | | | |
| | | 43 | 54 | 68 | 97 | 118 | 54 | 68 | 97 | 118 | 54 | 68 | 97 | 118 |
| 8 | 12 | 4.52 a | 7.78 a | 11.36 a | 19.14 a | 25 a | 8.11 a | 11.64 a | 20.9 a | 27.36 a | 10.55 a | 15.34 a | 25.42 a | 33.86 a |
| | 16 | 4.36 a | 7.63 a | 11.21 a | 18.97 a | 24.82 a | 7.96 a | 11.49 a | 20.73 a | 27.18 a | 10.39 a | 15.18 a | 25.24 a | 33.67 a |
| | 24 | 4.05 a | 7.33 a | 10.9 a | 18.63 a | 24.46 a | 7.65 a | 11.18 a | 20.38 a | 26.82 a | 10.06 a | 14.85 a | 24.87 a | 33.28 a |
| 9 | 12 | 4.38 a | 7.63 a | 11.2 a | 18.93 a | 24.72 a | 7.95 a | 11.46 a | 20.62 a | 27.04 a | 10.34 a | 15.11 a | 25.14 a | 33.48 a |
| | 16 | 4.19 a | 7.44 a | 11.01 a | 18.71 a | 24.49 a | 7.75 a | 11.26 a | 20.4 a | 26.81 a | 10.14 a | 14.91 a | 24.91 a | 33.23 a |
| | 24 | 3.79 a | 7.07 a | 10.62 a | 18.28 a | 24.04 a | 7.36 a | 10.88 a | 19.96 a | 26.35 a | 9.74 a | 14.49 a | 24.45 a | 32.75 a |
| 10 | 12 | 4.23 a | 7.45 a | 11.02 a | 18.69 a | 24.38 a | 7.76 a | 11.25 a | 20.29 a | 26.65 a | 10.12 a | 14.85 a | 24.78 a | 33.03 a |
| | 16 | 3.99 a | 7.23 a | 10.78 a | 18.42 a | 24.11 a | 7.52 a | 11.01 a | 20.02 a | 26.37 a | 9.87 a | 14.6 a | 24.5 a | 32.74 a |
| | 24 | 3.5 a | 6.77 a | 10.3 a | 17.89 a | 23.55 a | 7.05 a | 10.54 a | 19.49 a | 25.81 a | 9.37 a | 14.1 a | 23.93 a | 32.15 a |
| 12 | 12 | 3.87 a | 7.05 a | 10.57 a | 18.09 a | 23.53 a | 7.32 a | 10.74 a | 19.47 a | 25.69 a | 9.57 a | 14.23 a | 23.82 a | 31.99 a |
| | 16 | 3.52 a | 6.72 a | 10.23 a | 17.71 a | 23.14 a | 6.98 a | 10.4 a | 19.09 a | 25.3 a | 9.23 a | 13.87 a | 23.43 a | 31.58 a |
| | 24 | 2.83 a | 6.07 a | 9.55 a | 16.96 a | 22.35 a | 6.31 a | 9.74 a | 18.34 a | 24.51 a | 8.53 a | 13.16 a | 22.63 a | 30.74 a |
| 14 | 12 | 3.44 a | 6.54 a | 9.93 a | 17.15 a | 22.4 a | 6.78 a | 10.11 a | 18.44 a | 24.49 a | 8.94 a | 13.47 a | 22.69 a | 30.45 a |
| | 16 | 2.98 a | 6.11 a | 9.48 a | 16.65 a | 21.88 a | 6.34 a | 9.67 a | 17.95 a | 23.97 a | 8.47 a | 13 a | 22.16 a | 29.91 a |
| | 24 | 2.05 a | 5.25 a | 8.58 a | 15.66 a | 20.85 a | 5.44 a | 8.79 a | 16.96 a | 22.93 a | 7.55 a | 12.05 a | 21.11 a | 28.81 a |
| 16 | 12 | 2.96 a | 5.96 a | 9.18 a | 15.99 a | 21 a | 6.17 a | 9.39 a | 17.24 a | 23.07 a | 8.22 a | 12.6 a | 21.42 a | 28.5 a |
| | 16 | 2.37 a | 5.41 a | 8.61 a | 15.37 a | 20.35 a | 5.61 a | 8.83 a | 16.62 a | 22.42 a | 7.63 a | 12 a | 20.76 a | 27.82 a |
| | 24 | 1.18 b | 4.32 a | 7.47 a | 14.12 a | 19.06 a | 4.47 a | 7.72 a | 15.38 a | 21.12 a | 6.47 a | 10.81 a | 19.43 a | 26.47 a |

See Combined Axial and Lateral Load Table Notes



## 30 psf Lateral Load

| Wall Height (ft) | Spacing (in.) o.c. | 362S137-(mils) | | | | 362S162-(mils) | | | | | 362S200-(mils) | | | | | 362S250-(mils) | | | |
|---|---|---|---|---|---|---|---|---|---|---|---|---|---|---|---|---|---|---|---|
| | | 33 ksi | | 50 ksi | | 33 ksi | | 50 ksi | | | 33 ksi | | 50 ksi | | | 33 ksi | 50 ksi | | |
| | | 33 | 43 | 54 | 68 | 33 | 43 | 54 | 68 | 97 | 97 | 33 | 54 | 68 | 97 | 43 | 54 | 68 | 97 |
| 8 | 12 | 0.63 b | 1.25 a | 2.45 a | 3.47 a | 0.96 a | 1.66 a | 3.25 a | 4.45 a | 6.82 a | 1.27 a | 2.3 a | 4.22 a | 7.01 a | 8.5 a | 2.68 a | 4.83 a | 6.64 a | 9.76 a |
| | 16 | 0.31 c | 0.92 b | 2.18 a | 3.24 a | 0.6 b | 1.31 a | 2.96 a | 4.19 a | 6.55 a | 0.87 b | 1.92 a | 3.88 a | 6.62 a | 8.22 a | 2.26 a | 4.47 a | 6.29 a | 9.43 a |
| | 24 | | 0.25 d | 1.65 c | 2.77 b | | 0.63 c | 2.38 b | 3.67 a | 6.02 a | 0.08 d | 1.15 b | 3.22 a | 5.84 a | 7.66 a | 1.43 b | 3.75 a | 5.58 a | 8.78 a |
| 9 | 12 | 0.36 c | 0.96 b | 2.13 a | 3.12 a | 0.65 c | 1.33 a | 2.86 a | 4 a | 6.19 a | 0.93 b | 1.92 a | 3.72 a | 6.32 a | 7.72 a | 2.28 a | 4.35 a | 5.95 a | 8.87 a |
| | 16 | | 0.55 d | 1.81 c | 2.84 b | 0.21 d | 0.91 c | 2.51 b | 3.69 a | 5.87 a | 0.44 c | 1.45 b | 3.32 a | 5.85 a | 7.39 a | 1.77 a | 3.91 a | 5.53 a | 8.49 a |
| | 24 | | | 1.17 d | 2.29 d | | 0.07 d | 1.82 d | 3.06 c | 5.24 a | | 0.51 d | 2.53 c | 4.92 b | 6.73 a | 0.75 c | 3.04 b | 4.7 a | 7.72 a |
| 10 | 12 | 0.07 e | 0.65 d | 1.79 c | 2.74 b | 0.33 d | 0.93 c | 2.45 b | 3.52 a | 5.51 a | 0.56 c | 1.52 b | 3.21 a | 5.55 a | 6.89 a | 1.86 a | 3.82 a | 5.24 a | 7.95 a |
| | 16 | | 0.16 e | 1.42 d | 2.42 c | | 0.47 d | 2.05 c | 3.16 b | 5.15 a | | 0.96 d | 2.75 c | 5.02 b | 6.52 a | 1.25 c | 3.31 b | 4.76 a | 7.51 a |
| | 24 | | | 0.68 e | 1.77 e | | | 1.24 e | 2.44 d | 4.44 c | | | 1.84 d | 3.96 d | 5.77 b | 0.03 d | 2.29 d | 3.81 c | 6.64 a |
| 12 | 12 | | | 1.13 e | 1.98 d | | 0.32 e | 1.61 d | 2.54 d | 4.14 b | | 0.7 d | 2.17 d | 4 c | 5.23 a | 0.94 d | 2.63 c | 3.82 b | 6.09 a |
| | 16 | | | 0.66 e | 1.58 e | | | 1.12 e | 2.11 e | 3.72 d | | | 1.62 e | 3.37 d | 4.79 c | 0.16 e | 2.02 d | 3.25 c | 5.56 b |
| | 24 | | | | 0.79 f | | | 0.14 f | 1.24 f | 2.87 e | | | 0.53 f | 2.11 e | 3.9 d | | 0.79 e | 2.11 e | 4.52 d |
| 14 | 12 | | | 0.53 f | 1.3 e | | | 0.9 f | 1.71 e | 3 d | | | 1.29 e | 2.7 e | 3.86 d | 0.08 e | 1.61 e | 2.63 d | 4.51 c |
| | 16 | | | | 0.84 f | | | 0.35 f | 1.22 f | 2.53 e | | | 0.68 f | 2 e | 3.37 e | | 0.93 e | 1.99 e | 3.93 d |
| | 24 | | | | | | | | 0.25 f | 1.59 f | | | | 0.6 f | 2.39 f | | -0.44 f | 0.72 f | 2.77 e |
| 16 | 12 | | | 0.03 f | 0.73 f | | | 0.32 f | 1.04 f | 2.09 e | | | 0.6 f | 1.69 f | 2.79 e | | 0.81 f | 1.68 e | 3.27 d |
| | 16 | | | | 0.24 f | | | | 0.52 f | 1.59 f | | | | 0.94 f | 2.27 f | | 0.07 f | 1 f | 2.65 e |
| | 24 | | | | | | | | | 0.59 f | | | | | 1.22 f | | | | 1.4 f |

## 30 psf Lateral Load

| Wall Height (ft) | Spacing (in.) o.c. | 362S300-(mils) | | | 600S137-(mils) | | | | | 600S162-(mils) | | | | | | 600S200-(mils) | |
|---|---|---|---|---|---|---|---|---|---|---|---|---|---|---|---|---|---|
| | | 50 ksi | | | 33 ksi | | 50 ksi | | | 33 ksi | | 50 ksi | | | | 33 ksi | |
| | | 54 | 68 | 97 | 33 | 43 | 54 | 68 | 97 | 33 | 43 | 54 | 68 | 97 | 118 | 33 | 43 |
| 8 | 12 | 4.9 a | 7.1 a | 10.99 a | 1.26 a | 2.01 a | 3.39 a | 4.63 a | 7.16 a | 1.9 a | 2.89 a | 5.1 a | 6.95 a | 10.86 a | 13.69 a | 2.27 a | 3.67 a |
| | 16 | 4.55 a | 6.74 a | 10.66 a | 1.05 a | 1.81 a | 3.23 a | 4.47 a | 7.02 a | 1.68 a | 2.68 a | 4.9 a | 6.76 a | 10.67 a | 13.49 a | 2.03 a | 3.42 a |
| | 24 | 3.84 a | 6.02 a | 10 a | 0.64 a | 1.41 a | 2.9 a | 4.15 a | 6.73 a | 1.25 a | 2.27 a | 4.5 a | 6.39 a | 10.28 a | 13.09 a | 1.56 a | 2.93 a |
| 9 | 12 | 4.42 a | 6.43 a | 10.16 a | 1.09 a | 1.85 a | 3.26 a | 4.5 a | 7.04 a | 1.72 a | 2.72 a | 4.94 a | 6.8 a | 10.71 a | 13.54 a | 2.07 a | 3.45 a |
| | 16 | 3.99 a | 6 a | 9.77 a | 0.83 a | 1.6 a | 3.05 a | 4.3 a | 6.86 a | 1.45 a | 2.46 a | 4.69 a | 6.56 a | 10.46 a | 13.28 a | 1.77 a | 3.14 a |
| | 24 | 3.14 b | 5.13 a | 8.97 a | 0.31 a | 1.09 a | 2.64 a | 3.89 a | 6.5 a | 0.9 a | 1.94 a | 4.19 a | 6.09 a | 9.97 a | 12.78 a | 1.17 a | 2.52 a |
| 10 | 12 | 3.91 a | 5.74 a | 9.15 a | 0.91 a | 1.67 a | 3.12 a | 4.36 a | 6.92 a | 1.52 a | 2.52 a | 4.75 a | 6.63 a | 10.53 a | 13.36 a | 1.84 a | 3.19 a |
| | 16 | 3.41 a | 5.24 a | 8.7 a | 0.59 a | 1.36 a | 2.86 a | 4.11 a | 6.69 a | 1.18 a | 2.2 a | 4.44 a | 6.34 a | 10.23 a | 13.04 a | 1.48 a | 2.81 a |
| | 24 | 2.41 c | 4.24 b | 7.79 a | | 0.74 a | 2.35 a | 3.61 a | 6.24 a | 0.52 b | 1.56 a | 3.82 a | 5.75 a | 9.62 a | 12.42 a | 0.74 a | 2.06 a |
| 12 | 12 | 2.92 c | 4.38 a | 7.09 a | 0.48 b | 1.26 a | 2.78 a | 4.03 a | 6.62 a | 1.05 a | 2.05 a | 4.21 a | 6.13 a | 10.13 a | 12.94 a | 1.33 a | 2.61 a |
| | 16 | 2.27 d | 3.76 c | 6.55 a | 0.02 c | 0.81 b | 2.41 a | 3.67 a | 6.29 a | 0.58 c | 1.6 a | 3.78 a | 5.71 a | 9.69 a | 12.49 a | 0.81 b | 2.09 a |
| | 24 | 0.97 e | 2.52 d | 5.47 c | | | 1.68 c | 2.95 b | 5.64 a | | 0.7 c | 2.92 b | 4.88 a | 8.82 a | 11.59 a | | 1.03 c |
| 14 | 12 | 1.9 e | 3.09 d | 5.34 b | | 0.78 c | 2.38 b | 3.64 a | 6.27 a | 0.53 c | 1.51 b | 3.57 a | 5.41 a | 9.35 a | 12.46 a | 0.75 c | 1.96 a |
| | 16 | 1.14 e | 2.39 e | 4.73 d | | 0.17 d | 1.89 c | 3.15 b | 5.82 a | | 0.92 d | 3.01 c | 4.87 a | 8.77 a | 11.84 a | 0.07 d | 1.27 c |
| | 24 | | 0.98 f | 3.52 e | | | 0.89 e | 2.17 d | 4.94 c | | | 1.89 d | 3.79 c | 7.62 b | 10.62 a | | |
| 16 | 12 | 1 f | 2.02 e | 3.95 d | | 0.21 d | 1.93 d | 3.19 c | 5.86 a | | 0.92 d | 2.85 c | 4.58 b | 8.19 a | 11 a | 0.12 d | 1.25 c |
| | 16 | 0.18 f | 1.26 f | 3.29 e | | | 1.28 e | 2.55 d | 5.28 c | | 0.18 e | 2.17 d | 3.92 c | 7.49 b | 10.26 a | | 0.4 d |
| | 24 | | | 1.99 f | | | | 1.27 e | 4.13 d | | | 0.81 e | 2.61 e | 6.09 d | 8.78 c | | |

See Combined Axial and Lateral Load Table Notes

## 30 psf Lateral Load

| Wall Height (ft) | Spacing (in.) o.c. | 600S200-(mils) | | | | 600S250-(mils) | | | | | 600S300-(mils) | | | | 600S350-(mils) | | | |
|---|---|---|---|---|---|---|---|---|---|---|---|---|---|---|---|---|---|---|
| | | 50 ksi | | | | 33 ksi | 50 ksi | | | | 50 ksi | | | | 50 ksi | | | |
| | | 54 | 68 | 97 | 118 | 43 | 54 | 68 | 97 | 118 | 54 | 68 | 97 | 118 | 54 | 68 | 97 | 118 |
| 8 | 12 | 6.76 a | 9.18 a | 14.66 a | 18.94 a | 4.01 a | 7.01 a | 10.28 a | 17.21 a | 22.07 a | 7.31 a | 10.48 a | 18.53 a | 24.18 a | 9.58 a | 14.04 a | 23.11 a | 30.65 a |
| | 16 | 6.52 a | 8.94 a | 14.43 a | 18.69 a | 3.76 a | 6.77 a | 10.02 a | 16.93 a | 21.79 a | 7.07 a | 10.22 a | 18.25 a | 23.89 a | 9.33 a | 13.77 a | 22.81 a | 30.34 a |
| | 24 | 6.04 a | 8.46 a | 13.97 a | 18.21 a | 3.25 a | 6.3 a | 9.51 a | 16.37 a | 21.21 a | 6.6 a | 9.72 a | 17.69 a | 23.32 a | 8.83 a | 13.23 a | 22.22 a | 29.73 a |
| 9 | 12 | 6.48 a | 8.87 a | 14.29 a | 18.5 a | 3.78 a | 6.74 a | 9.94 a | 16.71 a | 21.49 a | 7.04 a | 10.14 a | 18 a | 23.57 a | 9.24 a | 13.63 a | 22.51 a | 29.75 a |
| | 16 | 6.19 a | 8.58 a | 14.01 a | 18.2 a | 3.46 a | 6.45 a | 9.61 a | 16.36 a | 21.13 a | 6.74 a | 9.82 a | 17.66 a | 23.21 a | 8.93 a | 13.29 a | 22.14 a | 29.37 a |
| | 24 | 5.59 a | 7.98 a | 13.43 a | 17.59 a | 2.82 a | 5.86 a | 8.97 a | 15.67 a | 20.41 a | 6.15 a | 9.19 a | 16.96 a | 22.49 a | 8.3 a | 12.61 a | 21.4 a | 28.61 a |
| 10 | 12 | 6.17 a | 8.52 a | 13.86 a | 17.98 a | 3.52 a | 6.44 a | 9.55 a | 16.14 a | 20.81 a | 6.73 a | 9.76 a | 17.4 a | 22.88 a | 8.87 a | 13.16 a | 21.85 a | 28.75 a |
| | 16 | 5.81 a | 8.16 a | 13.51 a | 17.61 a | 3.13 a | 6.08 a | 9.16 a | 15.72 a | 20.38 a | 6.37 a | 9.38 a | 16.99 a | 22.45 a | 8.48 a | 12.75 a | 21.4 a | 28.29 a |
| | 24 | 5.09 a | 7.44 a | 12.82 a | 16.88 a | 2.34 a | 5.37 a | 8.38 a | 14.88 a | 19.51 a | 5.65 a | 8.61 a | 16.15 a | 21.58 a | 7.72 a | 11.93 a | 20.5 a | 27.38 a |
| 12 | 12 | 5.44 a | 7.69 a | 12.81 a | 16.69 a | 2.93 a | 5.75 a | 8.66 a | 14.79 a | 19.18 a | 6.02 a | 8.94 a | 16.02 a | 21.3 a | 8.01 a | 12.1 a | 20.37 a | 26.46 a |
| | 16 | 4.95 a | 7.2 a | 12.33 a | 16.19 a | 2.38 a | 5.25 a | 8.12 a | 14.22 a | 18.59 a | 5.52 a | 8.41 a | 15.45 a | 20.7 a | 7.49 a | 11.53 a | 19.75 a | 25.84 a |
| | 24 | 3.95 b | 6.2 a | 11.37 a | 15.18 a | 1.28 b | 4.26 a | 7.04 a | 13.06 a | 17.41 a | 4.52 a | 7.34 a | 14.31 a | 19.5 a | 6.43 a | 10.4 a | 18.51 a | 24.6 a |
| 14 | 12 | 4.6 a | 6.71 a | 11.51 a | 15.09 a | 2.26 a | 4.99 a | 7.64 a | 13.21 a | 17.26 a | 5.22 a | 8 a | 14.46 a | 19.55 a | 7.05 a | 10.89 a | 18.53 a | 23.88 a |
| | 16 | 3.97 b | 6.08 a | 10.9 a | 14.45 a | 1.53 b | 4.34 a | 6.95 a | 12.48 a | 16.51 a | 4.57 a | 7.31 a | 13.72 a | 18.78 a | 6.37 a | 10.16 a | 17.74 a | 23.1 a |
| | 24 | 2.7 d | 4.8 c | 9.68 a | 13.17 a | 0.08 d | 3.05 c | 5.55 b | 11.02 a | 15.01 a | 3.27 c | 5.92 b | 12.26 a | 17.24 a | 5.02 b | 8.7 a | 16.15 a | 21.53 a |
| 16 | 12 | 3.7 b | 5.64 a | 10.06 a | 13.27 a | 1.53 c | 4.2 b | 6.57 a | 11.49 a | 15.15 a | 4.35 a | 6.99 a | 12.8 a | 17.29 a | 6.03 a | 9.59 a | 16.27 a | 21.14 a |
| | 16 | 2.94 d | 4.87 c | 9.32 a | 12.51 a | 0.62 d | 3.39 c | 5.72 b | 10.62 a | 14.26 a | 3.56 c | 6.12 b | 11.91 a | 16.36 a | 5.2 b | 8.7 a | 15.32 a | 20.21 a |
| | 24 | 1.41 e | 3.35 d | 7.86 c | 10.98 b | | 1.78 e | 4.01 d | 8.87 c | 12.46 b | 1.96 d | 4.4 d | 10.14 b | 14.52 a | 3.54 d | 6.9 c | 13.43 a | 18.34 a |

## 30 psf Lateral Load

| Wall Height (ft) | Spacing (in.) o.c. | 800S137-(mils) | | | | | 800S162-(mils) | | | | | | 800S200-(mils) | | | | | |
|---|---|---|---|---|---|---|---|---|---|---|---|---|---|---|---|---|---|---|
| | | 33 ksi | | 50 ksi | | | 33 ksi | | 50 ksi | | | | 33 ksi | | 50 ksi | | | |
| | | 33 | 43 | 54 | 68 | 97 | 33 | 43 | 54 | 68 | 97 | 118 | 33 | 43 | 54 | 68 | 97 | 118 |
| 8 | 12 | 1.27 a* | 2.08 a | 3.28 a | 4.47 a | 6.99 a | 1.86 a* | 2.94 a | 5.06 a | 6.88 a | 10.92 a | 13.98 a | 2.39 a* | 4.06 a | 7.32 a | 9.85 a | 15.56 a | 20.02 a |
| | 16 | 1.1 a* | 1.94 a | 3.17 a | 4.36 a | 6.9 a | 1.65 a* | 2.77 a | 4.91 a | 6.73 a | 10.79 a | 13.85 a | 2.16 a* | 3.88 a | 7.15 a | 9.69 a | 15.4 a | 19.85 a |
| | 24 | 0.76 a* | 1.67 a | 2.96 a | 4.15 a | 6.7 a | 1.23 a* | 2.44 a | 4.62 a | 6.45 a | 10.53 a | 13.59 a | 1.71 a* | 3.54 a | 6.81 a | 9.35 a | 15.08 a | 19.51 a |
| 9 | 12 | 1.14 a* | 1.97 a | 3.2 a | 4.38 a | 6.91 a | 1.69 a* | 2.8 a | 4.94 a | 6.76 a | 10.81 a | 13.88 a | 2.21 a* | 3.92 a | 7.19 a | 9.72 a | 15.43 a | 19.88 a |
| | 16 | 0.92 a* | 1.8 a | 3.06 a | 4.25 a | 6.79 a | 1.43 a* | 2.59 a | 4.76 a | 6.58 a | 10.65 a | 13.71 a | 1.93 a* | 3.7 a | 6.97 a | 9.51 a | 15.23 a | 19.67 a |
| | 24 | 0.48 a* | 1.45 a | 2.78 a | 3.98 a | 6.55 a | 0.9 a* | 2.17 a | 4.39 a | 6.22 a | 10.32 a | 13.38 a | 1.35 a* | 3.26 a | 6.54 a | 9.09 a | 14.82 a | 19.25 a |
| 10 | 12 | 0.98 a* | 1.85 a | 3.1 a | 4.29 a | 6.83 a | 1.51 a* | 2.66 a | 4.81 a | 6.64 a | 10.7 a | 13.76 a | 2.01 a* | 3.76 a | 7.04 a | 9.57 a | 15.29 a | 19.73 a |
| | 16 | 0.72 a* | 1.63 a | 2.93 a | 4.12 a | 6.68 a | 1.18 a* | 2.39 a | 4.58 a | 6.41 a | 10.49 a | 13.55 a | 1.66 a* | 3.49 a | 6.77 a | 9.31 a | 15.04 a | 19.47 a |
| | 24 | 0.18 a* | 1.2 a | 2.59 a | 3.79 a | 6.38 a | 0.53 a* | 1.87 a | 4.12 a | 5.97 a | 10.08 a | 13.14 a | 0.95 a* | 2.96 a | 6.24 a | 8.79 a | 14.54 a | 18.95 a |
| 12 | 12 | 0.63 a* | 1.56 a | 2.87 a | 4.07 a | 6.63 a | 1.08 a* | 2.31 a | 4.51 a | 6.34 a | 10.43 a | 13.49 a | 1.54 a* | 3.4 a | 6.68 a | 9.23 a | 14.96 a | 19.39 a |
| | 16 | 0.24 a* | 1.25 a | 2.63 a | 3.83 a | 6.42 a | 0.61 a* | 1.94 a | 4.18 a | 6.02 a | 10.13 a | 13.19 a | 1.03 a* | 3.01 a | 6.3 a | 8.85 a | 14.6 a | 19.01 a |
| | 24 | | 0.63 a | 2.13 a | 3.36 a | 5.99 a | | 1.19 a | 3.52 a | 5.38 a | 9.54 a | 12.6 a | 0.02 a* | 2.24 a | 5.54 a | 8.1 a | 13.88 a | 18.26 a |
| 14 | 12 | 0.21 a* | 1.22 a | 2.61 a | 3.81 a | 6.4 a | 0.57 a* | 1.9 a | 4.15 a | 6 a | 10.11 a | 13.17 a | 0.98 a* | 2.93 a | 6.12 a | 8.66 a | 14.48 a | 18.98 a |
| | 16 | | 0.8 a | 2.27 a | 3.49 a | 6.11 a | | 1.39 a | 3.7 a | 5.56 a | 9.7 a | 12.76 a | 0.3 a* | 2.42 a | 5.62 a | 8.15 a | 14 a | 18.47 a |
| | 24 | | | 1.6 b | 2.84 a | 5.52 a | | 0.37 b | 2.81 a | 4.69 a | 8.9 a | 11.96 a | | 1.38 a | 4.61 a | 7.15 a | 13.03 a | 17.44 a |
| 16 | 12 | | 0.84 a | 2.3 a | 3.52 a | 6.13 a | | 1.44 a | 3.74 a | 5.6 a | 9.74 a | 12.8 a | 0.35 a* | 2.4 a | 5.46 a | 7.91 a | 13.56 a | 17.98 a |
| | 16 | | 0.28 c | 1.86 b | 3.09 a | 5.75 a | | 0.77 b | 3.16 a | 5.03 a | 9.21 a | 12.27 a | | 1.74 a | 4.82 a | 7.28 a | 12.94 a | 17.33 a |
| | 24 | | | 0.98 d | 2.25 c | 4.99 a | | | 1.99 c | 3.89 b | 8.16 a | 11.22 a | | 0.42 c | 3.55 b | 6.01 a | 11.72 a | 16.03 a |

See Combined Axial and Lateral Load Table Notes

# 30 psf Lateral Load

| Wall Height (ft) | Spacing (in.) o.c. | 800S250-(mils) | | | | | 800S300-(mils) | | | | 800S350-(mils) | | | |
|---|---|---|---|---|---|---|---|---|---|---|---|---|---|---|
| | | 33 ksi | 50 ksi | | | | 50 ksi | | | | 50 ksi | | | |
| | | 43 | 54 | 68 | 97 | 118 | 54 | 68 | 97 | 118 | 54 | 68 | 97 | 118 |
| 8 | 12 | 4.43 a | 7.69 a | 11.27 a | 19.04 a | 24.89 a | 8.02 a | 11.55 a | 20.8 a | 27.25 a | 10.45 a | 15.24 a | 25.31 a | 33.74 a |
| | 16 | 4.24 a | 7.51 a | 11.09 a | 18.83 a | 24.68 a | 7.83 a | 11.37 a | 20.59 a | 27.03 a | 10.26 a | 15.05 a | 25.09 a | 33.51 a |
| | 24 | 3.86 a | 7.16 a | 10.72 a | 18.42 a | 24.25 a | 7.46 a | 11 a | 20.17 a | 26.6 a | 9.87 a | 14.65 a | 24.65 a | 33.05 a |
| 9 | 12 | 4.26 a | 7.51 a | 11.08 a | 18.8 a | 24.58 a | 7.83 a | 11.34 a | 20.49 a | 26.9 a | 10.22 a | 14.99 a | 25 a | 33.33 a |
| | 16 | 4.03 a | 7.29 a | 10.85 a | 18.54 a | 24.31 a | 7.6 a | 11.11 a | 20.23 a | 26.62 a | 9.98 a | 14.74 a | 24.73 a | 33.04 a |
| | 24 | 3.55 a | 6.85 a | 10.38 a | 18.02 a | 23.77 a | 7.13 a | 10.65 a | 19.7 a | 26.08 a | 9.49 a | 14.25 a | 24.17 a | 32.46 a |
| 10 | 12 | 4.08 a | 7.32 a | 10.87 a | 18.53 a | 24.22 a | 7.62 a | 11.11 a | 20.13 a | 26.48 a | 9.97 a | 14.7 a | 24.61 a | 32.86 a |
| | 16 | 3.79 a | 7.04 a | 10.59 a | 18.21 a | 23.88 a | 7.33 a | 10.82 a | 19.81 a | 26.15 a | 9.67 a | 14.4 a | 24.27 a | 32.5 a |
| | 24 | 3.21 a | 6.5 a | 10.01 a | 17.57 a | 23.22 a | 6.76 a | 10.26 a | 19.17 a | 25.48 a | 9.07 a | 13.79 a | 23.59 a | 31.8 a |
| 12 | 12 | 3.66 a | 6.85 a | 10.36 a | 17.86 a | 23.3 a | 7.12 a | 10.54 a | 19.24 a | 25.46 a | 9.37 a | 14.02 a | 23.58 a | 31.74 a |
| | 16 | 3.25 a | 6.46 a | 9.96 a | 17.41 a | 22.82 a | 6.71 a | 10.14 a | 18.79 a | 24.99 a | 8.95 a | 13.59 a | 23.11 a | 31.24 a |
| | 24 | 2.42 a | 5.69 a | 9.14 a | 16.51 a | 21.88 a | 5.9 a | 9.34 a | 17.89 a | 24.04 a | 8.11 a | 12.73 a | 22.15 a | 30.24 a |
| 14 | 12 | 3.17 a | 6.28 a | 9.66 a | 16.85 a | 22.09 a | 6.52 a | 9.85 a | 18.14 a | 24.17 a | 8.66 a | 13.19 a | 22.37 a | 30.13 a |
| | 16 | 2.61 a | 5.77 a | 9.12 a | 16.25 a | 21.47 a | 5.98 a | 9.32 a | 17.55 a | 23.55 a | 8.1 a | 12.62 a | 21.74 a | 29.47 a |
| | 24 | 1.5 a | 4.74 a | 8.04 a | 15.06 a | 20.23 a | 4.9 a | 8.26 a | 16.36 a | 22.3 a | 7 a | 11.49 a | 20.48 a | 28.16 a |
| 16 | 12 | 2.6 a | 5.63 a | 8.83 a | 15.62 a | 20.61 a | 5.83 a | 9.05 a | 16.86 a | 22.68 a | 7.87 a | 12.24 a | 21.02 a | 28.1 a |
| | 16 | 1.89 a | 4.98 a | 8.15 a | 14.87 a | 19.84 a | 5.15 a | 8.38 a | 16.12 a | 21.9 a | 7.17 a | 11.52 a | 20.23 a | 27.28 a |
| | 24 | 0.47 c | 3.67 b | 6.79 a | 13.38 a | 18.28 a | 3.79 a | 7.05 a | 14.63 a | 20.34 a | 5.77 a | 10.09 a | 18.64 a | 25.65 a |

See Combined Axial and Lateral Load Table Notes



## 35 psf Lateral Load

| Wall Height (ft) | Spacing (in.) o.c. | 362S137-(mils) | | | | 362S162-(mils) | | | | | 362S200-(mils) | | | | | 362S250-(mils) | | | |
|---|---|---|---|---|---|---|---|---|---|---|---|---|---|---|---|---|---|---|---|
| | | 33 ksi | | 50 ksi | | 33 ksi | | 50 ksi | | | 33 ksi | | 50 ksi | | | 33 ksi | 50 ksi | | |
| | | 33 | 43 | 54 | 68 | 33 | 43 | 54 | 68 | 97 | 97 | 33 | 54 | 68 | 97 | 43 | 54 | 68 | 97 |
| 8 | 12 | 0.47 b | 1.08 a | 2.32 a | 3.35 a | 0.78 b | 1.49 a | 3.11 a | 4.32 a | 6.68 a | 1.07 a | 2.11 a | 4.05 a | 6.82 a | 8.36 a | 2.47 a | 4.65 a | 6.46 a | 9.59 a |
| | 16 | 0.09 d | 0.69 c | 2.01 b | 3.08 a | 0.36 c | 1.09 b | 2.77 a | 4.02 a | 6.37 a | 0.61 b | 1.66 a | 3.66 a | 6.36 a | 8.04 a | 1.99 a | 4.23 a | 6.05 a | 9.21 a |
| | 24 | | | 1.39 d | 2.54 c | | 0.28 d | 2.09 c | 3.4 b | 5.75 a | | 0.76 c | 2.88 b | 5.46 a | 7.38 a | 1.02 b | 3.39 a | 5.23 a | 8.46 a |
| 9 | 12 | 0.16 d | 0.75 c | 1.97 b | 2.98 a | 0.43 c | 1.12 b | 2.69 a | 3.84 a | 6.03 a | 0.68 c | 1.68 a | 3.52 a | 6.08 a | 7.55 a | 2.02 a | 4.13 a | 5.74 a | 8.68 a |
| | 16 | | 0.27 d | 1.6 c | 2.66 b | | 0.63 d | 2.28 c | 3.48 b | 5.66 a | 0.11 d | 1.14 c | 3.06 b | 5.54 a | 7.17 a | 1.43 b | 3.62 a | 5.25 a | 8.23 a |
| | 24 | | | 0.85 e | 2.01 d | | | 1.47 d | 2.75 d | 4.93 b | | 0.04 d | 2.13 d | 4.46 c | 6.4 a | 0.24 d | 2.6 c | 4.28 b | 7.34 a |
| 10 | 12 | | 0.4 d | 1.61 c | 2.58 c | 0.07 e | 0.7 d | 2.25 c | 3.34 b | 5.33 a | 0.27 d | 1.24 c | 2.98 b | 5.29 a | 6.7 a | 1.55 b | 3.57 a | 5 a | 7.73 a |
| | 16 | | | 1.17 d | 2.2 d | | 0.16 e | 1.78 d | 2.92 c | 4.91 b | | 0.6 d | 2.45 c | 4.67 b | 6.27 a | 0.84 d | 2.97 c | 4.44 b | 7.22 a |
| | 24 | | | 0.3 e | 1.45 e | | | 0.84 e | 2.08 e | 4.08 d | | | 1.38 e | 3.43 d | 5.39 c | | 1.78 d | 3.33 d | 6.2 b |
| 12 | 12 | | | 0.9 e | 1.78 e | | | 1.37 e | 2.33 d | 3.93 c | | 0.35 e | 1.9 d | 3.69 d | 5.01 b | 0.55 d | 2.33 d | 3.54 c | 5.83 a |
| | 16 | | | 0.35 f | 1.32 e | | | 0.8 e | 1.82 e | 3.43 d | | | 1.26 e | 2.95 e | 4.49 d | | 1.61 e | 2.87 d | 5.22 c |
| | 24 | | | | 0.39 f | | | | 0.81 f | 2.44 e | | | | 1.48 f | 3.46 e | | 0.18 f | 1.54 e | 4 d |
| 14 | 12 | | | 0.26 f | 1.07 f | | | 0.62 f | 1.47 e | 2.76 e | | | 0.99 e | 2.35 e | 3.61 d | | 1.27 e | 2.31 e | 4.22 d |
| | 16 | | | | 0.54 f | | | | 0.9 f | 2.21 e | | | 0.27 f | 1.54 f | 3.04 e | | 0.47 f | 1.57 e | 3.54 e |
| | 24 | | | | | | | | | 1.12 f | | | | | 1.91 f | | | 0.08 f | 2.19 f |
| 16 | 12 | | | | 0.49 f | | | 0.02 f | 0.78 f | 1.84 f | | | 0.27 f | 1.31 f | 2.53 e | | 0.44 f | 1.34 f | 2.96 e |
| | 16 | | | | | | | | 0.17 f | 1.26 f | | | | 0.44 f | 1.92 f | | | 0.54 f | 2.23 f |
| | 24 | | | | | | | | | 0.09 | | | | | 0.7 f | | | | 0.78 f |

## 35 psf Lateral Load

| Wall Height (ft) | Spacing (in.) o.c. | 362S300-(mils) | | | 600S137-(mils) | | | | | 600S162-(mils) | | | | | | 600S200-(mils) | |
|---|---|---|---|---|---|---|---|---|---|---|---|---|---|---|---|---|---|
| | | 50 ksi | | | 33 ksi | | 50 ksi | | | 33 ksi | | 50 ksi | | | | 33 ksi | |
| | | 54 | 68 | 97 | 33 | 43 | 54 | 68 | 97 | 33 | 43 | 54 | 68 | 97 | 118 | 33 | 43 |
| 8 | 12 | 4.73 a | 6.92 a | 10.83 a | 1.15 a | 1.91 a | 3.31 a | 4.55 a | 7.09 a | 1.79 a | 2.78 a | 5 a | 6.86 a | 10.77 a | 13.59 a | 2.15 a | 3.55 a |
| | 16 | 4.31 a | 6.5 a | 10.44 a | 0.91 a | 1.68 a | 3.12 a | 4.36 a | 6.92 a | 1.54 a | 2.54 a | 4.77 a | 6.64 a | 10.54 a | 13.36 a | 1.87 a | 3.26 a |
| | 24 | 3.49 a | 5.66 a | 9.67 a | 0.43 a | 1.21 a | 2.74 a | 3.99 a | 6.58 a | 1.04 a | 2.06 a | 4.3 a | 6.2 a | 10.08 a | 12.89 a | 1.32 a | 2.68 a |
| 9 | 12 | 4.21 a | 6.21 a | 9.96 a | 0.96 a | 1.72 a | 3.16 a | 4.4 a | 6.95 a | 1.58 a | 2.59 a | 4.81 a | 6.68 a | 10.58 a | 13.41 a | 1.92 a | 3.29 a |
| | 16 | 3.71 a | 5.71 a | 9.5 a | 0.66 a | 1.43 a | 2.92 a | 4.16 a | 6.74 a | 1.27 a | 2.28 a | 4.52 a | 6.41 a | 10.3 a | 13.11 a | 1.57 a | 2.93 a |
| | 24 | 2.71 c | 4.7 a | 8.58 a | 0.05 b | 0.84 a | 2.44 a | 3.69 a | 6.31 a | 0.63 a | 1.67 a | 3.94 a | 5.85 a | 9.72 a | 12.52 a | 0.87 a | 2.21 a |
| 10 | 12 | 3.66 a | 5.49 a | 8.92 a | 0.75 a | 1.52 a | 2.99 a | 4.23 a | 6.8 a | 1.35 a | 2.36 a | 4.59 a | 6.49 a | 10.38 a | 13.2 a | 1.66 a | 3 a |
| | 16 | 3.08 b | 4.91 a | 8.39 a | 0.37 a | 1.15 a | 2.69 a | 3.94 a | 6.54 a | 0.96 a | 1.98 a | 4.23 a | 6.14 a | 10.03 a | 12.84 a | 1.23 a | 2.56 a |
| | 24 | 1.9 d | 3.74 c | 7.34 a | | 0.43 b | 2.1 a | 3.36 a | 6.01 a | 0.18 c | 1.24 a | 3.51 a | 5.46 a | 9.32 a | 12.11 a | 0.38 b | 1.68 a |
| 12 | 12 | 2.6 c | 4.07 b | 6.82 a | 0.25 c | 1.04 a | 2.6 a | 3.85 a | 6.46 a | 0.82 b | 1.83 a | 3.99 a | 5.92 a | 9.91 a | 12.72 a | 1.07 a | 2.35 a |
| | 16 | 1.84 d | 3.35 d | 6.19 b | | 0.51 c | 2.17 b | 3.43 a | 6.08 a | 0.27 c | 1.3 b | 3.49 a | 5.43 a | 9.4 a | 12.19 a | 0.47 c | 1.73 a |
| | 24 | 0.32 e | 1.9 e | 4.93 d | | | 1.32 d | 2.59 c | 5.32 a | | 0.24 d | 2.49 c | 4.47 b | 8.38 a | 11.14 a | | 0.5 c |
| 14 | 12 | 1.52 e | 2.74 d | 5.03 c | | 0.47 d | 2.14 c | 3.39 a | 6.05 a | 0.22 d | 1.22 c | 3.29 b | 5.14 a | 9.06 a | 12.15 a | 0.41 c | 1.61 b |
| | 16 | 0.63 f | 1.92 e | 4.33 d | | | 1.55 d | 2.82 c | 5.53 a | | 0.52 d | 2.64 c | 4.51 b | 8.39 a | 11.43 a | | 0.81 d |
| | 24 | | 0.28 f | 2.92 e | | | 0.39 e | 1.68 d | 4.5 c | | | 1.33 e | 3.26 d | 7.04 c | 10 b | | |
| 16 | 12 | 0.59 f | 1.64 e | 3.62 d | | | 1.6 d | 2.87 c | 5.57 b | | 0.55 d | 2.51 d | 4.25 c | 7.84 a | 10.63 a | | 0.83 d |
| | 16 | | 0.75 f | 2.86 e | | | 0.84 e | 2.12 d | 4.9 c | | | 1.71 e | 3.49 d | 7.02 c | 9.76 b | | |
| | 24 | | | 1.34 f | | | | 0.63 e | 3.55 e | | | 0.13 f | 1.96 e | 5.39 d | 8.04 d | | |

See Combined Axial and Lateral Load Table Notes

## 35 psf Lateral Load

| Wall Height (ft) | Spacing (in.) o.c. | 600S200-(mils) | | | | 600S250-(mils) | | | | | 600S300-(mils) | | | | 600S350-(mils) | | | |
|---|---|---|---|---|---|---|---|---|---|---|---|---|---|---|---|---|---|---|
| | | 50 ksi | | | | 33 ksi | 50 ksi | | | | 50 ksi | | | | 50 ksi | | | |
| | | 54 | 68 | 97 | 118 | 43 | 54 | 68 | 97 | 118 | 54 | 68 | 97 | 118 | 54 | 68 | 97 | 118 |
| 8 | 12 | 6.64 a | 9.06 a | 14.55 a | 18.82 a | 3.88 a | 6.89 a | 10.15 a | 17.07 a | 21.93 a | 7.19 a | 10.35 a | 18.39 a | 24.04 a | 9.46 a | 13.91 a | 22.96 a | 30.49 a |
| | 16 | 6.36 a | 8.78 a | 14.28 a | 18.53 a | 3.59 a | 6.62 a | 9.85 a | 16.74 a | 21.59 a | 6.92 a | 10.05 a | 18.06 a | 23.7 a | 9.16 a | 13.59 a | 22.61 a | 30.13 a |
| | 24 | 5.81 a | 8.22 a | 13.74 a | 17.97 a | 2.99 a | 6.07 a | 9.25 a | 16.09 a | 20.92 a | 6.36 a | 9.46 a | 17.42 a | 23.03 a | 8.58 a | 12.96 a | 21.92 a | 29.42 a |
| 9 | 12 | 6.33 a | 8.72 a | 14.15 a | 18.35 a | 3.62 a | 6.59 a | 9.78 a | 16.54 a | 21.31 a | 6.89 a | 9.98 a | 17.83 a | 23.39 a | 9.09 a | 13.46 a | 22.33 a | 29.56 a |
| | 16 | 5.99 a | 8.38 a | 13.82 a | 17.99 a | 3.24 a | 6.25 a | 9.4 a | 16.13 a | 20.89 a | 6.54 a | 9.61 a | 17.43 a | 22.97 a | 8.72 a | 13.06 a | 21.89 a | 29.12 a |
| | 24 | 5.29 a | 7.68 a | 13.15 a | 17.29 a | 2.5 a | 5.57 a | 8.65 a | 15.32 a | 20.05 a | 5.85 a | 8.88 a | 16.62 a | 22.14 a | 7.99 a | 12.27 a | 21.03 a | 28.23 a |
| 10 | 12 | 5.99 a | 8.34 a | 13.69 a | 17.8 a | 3.32 a | 6.26 a | 9.36 a | 15.93 a | 20.59 a | 6.55 a | 9.57 a | 17.2 a | 22.66 a | 8.67 a | 12.96 a | 21.62 a | 28.52 a |
| | 16 | 5.57 a | 7.92 a | 13.28 a | 17.37 a | 2.87 a | 5.85 a | 8.9 a | 15.44 a | 20.09 a | 6.13 a | 9.12 a | 16.71 a | 22.16 a | 8.23 a | 12.48 a | 21.1 a | 27.99 a |
| | 24 | 4.73 a | 7.08 a | 12.47 a | 16.51 a | 1.95 a | 5.01 a | 7.99 a | 14.46 a | 19.07 a | 5.29 a | 8.23 a | 15.73 a | 21.14 a | 7.34 a | 11.52 a | 20.05 a | 26.92 a |
| 12 | 12 | 5.2 a | 7.44 a | 12.57 a | 16.44 a | 2.66 a | 5.5 a | 8.39 a | 14.5 a | 18.89 a | 5.77 a | 8.67 a | 15.74 a | 21 a | 7.75 a | 11.82 a | 20.06 a | 26.15 a |
| | 16 | 4.62 a | 6.86 a | 12.01 a | 15.85 a | 2.01 a | 4.92 a | 7.76 a | 13.83 a | 18.2 a | 5.19 a | 8.05 a | 15.07 a | 20.3 a | 7.13 a | 11.15 a | 19.33 a | 25.42 a |
| | 24 | 3.46 b | 5.7 a | 10.89 a | 14.68 a | 0.73 c | 3.77 b | 6.5 a | 12.49 a | 16.81 a | 4.02 a | 6.81 a | 13.74 a | 18.91 a | 5.91 a | 9.83 a | 17.89 a | 23.98 a |
| 14 | 12 | 4.28 a | 6.39 a | 11.21 a | 14.77 a | 1.9 a | 4.66 a | 7.29 a | 12.85 a | 16.89 a | 4.89 a | 7.66 a | 14.09 a | 19.17 a | 6.71 a | 10.53 a | 18.13 a | 23.49 a |
| | 16 | 3.54 c | 5.65 b | 10.49 a | 14.02 a | 1.05 c | 3.91 b | 6.48 a | 11.99 a | 16.01 a | 4.14 b | 6.84 a | 13.24 a | 18.27 a | 5.92 a | 9.67 a | 17.21 a | 22.58 a |
| | 24 | 2.07 d | 4.17 d | 9.07 b | 12.53 a | -0.65 d | 2.41 d | 4.86 c | 10.29 a | 14.26 a | 2.63 d | 5.22 b | 11.53 a | 16.47 a | 4.34 c | 7.96 a | 15.35 a | 20.75 a |
| 16 | 12 | 3.32 c | 5.25 b | 9.69 a | 12.89 a | 1.07 c | 3.8 c | 6.15 a | 11.06 a | 14.71 a | 3.95 b | 6.55 a | 12.36 a | 16.82 a | 5.61 a | 9.14 a | 15.8 a | 20.67 a |
| | 16 | 2.43 d | 4.36 c | 8.83 b | 12 a | 0.01 d | 2.86 d | 5.15 c | 10.03 a | 13.66 a | 3.02 d | 5.55 b | 11.32 a | 15.75 a | 4.65 c | 8.1 a | 14.69 a | 19.58 a |
| | 24 | 0.65 e | 2.58 e | 7.13 d | 10.21 c | -2.11 e | 0.98 e | 3.16 d | 7.99 c | 11.57 b | 1.17 e | 3.54 d | 9.25 c | 13.6 b | 2.71 d | 6 c | 12.48 b | 17.41 a |

## 35 psf Lateral Load

| Wall Height (ft) | Spacing (in.) o.c. | 800S137-(mils) | | | | | 800S162-(mils) | | | | | | 800S200-(mils) | | | | | |
|---|---|---|---|---|---|---|---|---|---|---|---|---|---|---|---|---|---|---|
| | | 33 ksi | | 50 ksi | | | 33 ksi | | 50 ksi | | | | 33 ksi | | 50 ksi | | | |
| | | 33 | 43 | 54 | 68 | 97 | 33 | 43 | 54 | 68 | 97 | 118 | 33 | 43 | 54 | 68 | 97 | 118 |
| 8 | 12 | 1.19 a* | 2.01 a | 3.23 a | 4.42 a | 6.94 a | 1.76 a* | 2.85 a | 4.98 a | 6.8 a | 10.85 a | 13.91 a | 2.28 a* | 3.97 a | 7.24 a | 9.77 a | 15.48 a | 19.93 a |
| | 16 | 0.99 a* | 1.85 a | 3.1 a | 4.29 a | 6.83 a | 1.51 a* | 2.66 a | 4.81 a | 6.64 a | 10.7 a | 13.76 a | 2.01 a* | 3.77 a | 7.04 a | 9.57 a | 15.29 a | 19.74 a |
| | 24 | 0.59 a* | 1.53 a | 2.85 a | 4.05 a | 6.61 a | 1.03 a* | 2.27 a | 4.47 a | 6.31 a | 10.39 a | 13.45 a | 1.49 a* | 3.37 a | 6.64 a | 9.19 a | 14.92 a | 19.35 a |
| 9 | 12 | 1.03 a* | 1.88 a | 3.13 a | 4.32 a | 6.85 a | 1.56 a* | 2.7 a | 4.85 a | 6.67 a | 10.73 a | 13.79 a | 2.07 a* | 3.81 a | 7.08 a | 9.61 a | 15.33 a | 19.78 a |
| | 16 | 0.77 a* | 1.68 a | 2.97 a | 4.16 a | 6.71 a | 1.25 a* | 2.45 a | 4.63 a | 6.46 a | 10.54 a | 13.6 a | 1.74 a* | 3.55 a | 6.83 a | 9.37 a | 15.09 a | 19.53 a |
| | 24 | 0.27 a* | 1.27 a | 2.64 a | 3.85 a | 6.43 a | 0.64 a* | 1.96 a | 4.2 a | 6.04 a | 10.15 a | 13.21 a | 1.07 a* | 3.04 a | 6.33 a | 8.88 a | 14.62 a | 19.04 a |
| 10 | 12 | 0.85 a* | 1.74 a | 3.01 a | 4.21 a | 6.76 a | 1.35 a* | 2.52 a | 4.7 a | 6.53 a | 10.6 a | 13.66 a | 1.83 a* | 3.63 a | 6.9 a | 9.44 a | 15.16 a | 19.6 a |
| | 16 | 0.54 a* | 1.49 a | 2.81 a | 4.01 a | 6.58 a | 0.97 a* | 2.22 a | 4.43 a | 6.27 a | 10.36 a | 13.42 a | 1.42 a* | 3.32 a | 6.59 a | 9.14 a | 14.87 a | 19.3 a |
| | 24 | | 0.98 a | 2.41 a | 3.63 a | 6.23 a | 0.21 a* | 1.61 a | 3.9 a | 5.75 a | 9.88 a | 12.94 a | 0.6 a* | 2.69 a | 5.98 a | 8.53 a | 14.29 a | 18.69 a |
| 12 | 12 | 0.44 a* | 1.41 a | 2.75 a | 3.95 a | 6.53 a | 0.84 a* | 2.12 a | 4.34 a | 6.18 a | 10.28 a | 13.34 a | 1.29 a* | 3.21 a | 6.49 a | 9.04 a | 14.78 a | 19.2 a |
| | 16 | | 1.04 a | 2.46 a | 3.68 a | 6.28 a | 0.3 a* | 1.69 a | 3.96 a | 5.81 a | 9.93 a | 12.99 a | 0.7 a* | 2.75 a | 6.05 a | 8.6 a | 14.36 a | 18.76 a |
| | 24 | | 0.32 a | 1.89 a | 3.12 a | 5.77 a | | 0.81 a | 3.19 a | 5.06 a | 9.25 a | 12.3 a | | 1.85 a | 5.16 a | 7.72 a | 13.52 a | 17.88 a |
| 14 | 12 | | 1.01 a | 2.44 a | 3.65 a | 6.25 a | 0.25 a* | 1.65 a | 3.93 a | 5.78 a | 9.91 a | 12.97 a | 0.64 a* | 2.67 a | 5.87 a | 8.41 a | 14.24 a | 18.72 a |
| | 16 | | 0.52 b | 2.05 a | 3.27 a | 5.91 a | | 1.05 a | 3.41 a | 5.27 a | 9.44 a | 12.5 a | | 2.07 a | 5.28 a | 7.82 a | 13.67 a | 18.13 a |
| | 24 | | | 1.26 c | 2.52 a | 5.23 a | | | 2.36 b | 4.26 a | 8.5 a | 11.56 a | | 0.86 b | 4.1 a | 6.65 a | 12.54 a | 16.93 a |
| 16 | 12 | | 0.56 b | 2.08 a | 3.31 a | 5.94 a | | 1.1 b | 3.45 a | 5.31 a | 9.47 a | 12.53 a | | 2.07 a | 5.14 a | 7.6 a | 13.25 a | 17.65 a |
| | 16 | | | 1.57 c | 2.81 a | 5.5 a | | 0.32 c | 2.77 b | 4.65 a | 8.86 a | 11.92 a | | 1.3 b | 4.4 a | 6.86 a | 12.54 a | 16.89 a |
| | 24 | | | 0.55 d | 1.83 c | 4.61 b | | | 1.4 d | 3.32 c | 7.64 a | 10.69 a | | | 2.91 c | 5.38 b | 11.1 a | 15.38 a |

See Combined Axial and Lateral Load Table Notes

# 35 psf Lateral Load

| Wall Height (ft) | Spacing (in.) o.c. | 800S250-(mils) | | | | | 800S300-(mils) | | | | 800S350-(mils) | | | |
|---|---|---|---|---|---|---|---|---|---|---|---|---|---|---|
| | | 33 ksi | 50 ksi | | | | 50 ksi | | | | 50 ksi | | | |
| | | 43 | 54 | 68 | 97 | 118 | 54 | 68 | 97 | 118 | 54 | 68 | 97 | 118 |
| 8 | 12 | 4.33 a | 7.6 a | 11.18 a | 18.93 a | 24.79 a | 7.93 a | 11.46 a | 20.69 a | 27.14 a | 10.35 a | 15.14 a | 25.2 a | 33.63 a |
| | 16 | 4.11 a | 7.39 a | 10.96 a | 18.7 a | 24.53 a | 7.71 a | 11.24 a | 20.45 a | 26.89 a | 10.13 a | 14.91 a | 24.94 a | 33.36 a |
| | 24 | 3.68 a | 6.98 a | 10.53 a | 18.22 a | 24.03 a | 7.28 a | 10.82 a | 19.96 a | 26.38 a | 9.68 a | 14.46 a | 24.43 a | 32.82 a |
| 9 | 12 | 4.15 a | 7.4 a | 10.97 a | 18.67 a | 24.45 a | 7.71 a | 11.23 a | 20.36 a | 26.76 a | 10.1 a | 14.87 a | 24.86 a | 33.19 a |
| | 16 | 3.87 a | 7.14 a | 10.7 a | 18.37 a | 24.13 a | 7.44 a | 10.96 a | 20.05 a | 26.44 a | 9.82 a | 14.58 a | 24.54 a | 32.85 a |
| | 24 | 3.32 a | 6.62 a | 10.15 a | 17.76 a | 23.49 a | 6.9 a | 10.42 a | 19.44 a | 25.8 a | 9.25 a | 14 a | 23.89 a | 32.18 a |
| 10 | 12 | 3.94 a | 7.18 a | 10.73 a | 18.37 a | 24.05 a | 7.47 a | 10.96 a | 19.97 a | 26.32 a | 9.82 a | 14.55 a | 24.44 a | 32.68 a |
| | 16 | 3.6 a | 6.86 a | 10.39 a | 18 a | 23.66 a | 7.14 a | 10.64 a | 19.59 a | 25.92 a | 9.47 a | 14.2 a | 24.04 a | 32.27 a |
| | 24 | 2.92 a | 6.22 a | 9.72 a | 17.25 a | 22.88 a | 6.47 a | 9.98 a | 18.84 a | 25.14 a | 8.78 a | 13.49 a | 23.25 a | 31.44 a |
| 12 | 12 | 3.46 a | 6.66 a | 10.16 a | 17.64 a | 23.06 a | 6.91 a | 10.34 a | 19.02 a | 25.22 a | 9.16 a | 13.8 a | 23.35 a | 31.49 a |
| | 16 | 2.97 a | 6.2 a | 9.68 a | 17.11 a | 22.51 a | 6.44 a | 9.87 a | 18.49 a | 24.67 a | 8.67 a | 13.3 a | 22.79 a | 30.91 a |
| | 24 | 2 a | 5.3 a | 8.73 a | 16.05 a | 21.41 a | 5.5 a | 8.94 a | 17.44 a | 23.57 a | 7.69 a | 12.31 a | 21.67 a | 29.75 a |
| 14 | 12 | 2.89 a | 6.03 a | 9.39 a | 16.55 a | 21.78 a | 6.25 a | 9.58 a | 17.85 a | 23.86 a | 8.38 a | 12.9 a | 22.06 a | 29.8 a |
| | 16 | 2.24 a | 5.42 a | 8.76 a | 15.86 a | 21.05 a | 5.62 a | 8.97 a | 17.15 a | 23.14 a | 7.73 a | 12.24 a | 21.32 a | 29.03 a |
| | 24 | 0.94 b | 4.22 a | 7.5 a | 14.46 a | 19.61 a | 4.37 a | 7.73 a | 15.77 a | 21.68 a | 6.44 a | 10.92 a | 19.85 a | 27.5 a |
| 16 | 12 | 2.25 a | 5.3 a | 8.49 a | 15.24 a | 20.22 a | 5.49 a | 8.72 a | 16.49 a | 22.29 a | 7.52 a | 11.88 a | 20.62 a | 27.69 a |
| | 16 | 1.42 b | 4.54 a | 7.7 a | 14.37 a | 19.32 a | 4.7 a | 7.94 a | 15.63 a | 21.38 a | 6.7 a | 11.05 a | 19.7 a | 26.74 a |
| | 24 | -0.24 d | 3.02 c | 6.11 a | 12.63 a | 17.5 a | 3.11 b | 6.38 a | 13.89 a | 19.55 a | 5.07 a | 9.38 a | 17.84 a | 24.84 a |

See Combined Axial and Lateral Load Table Notes

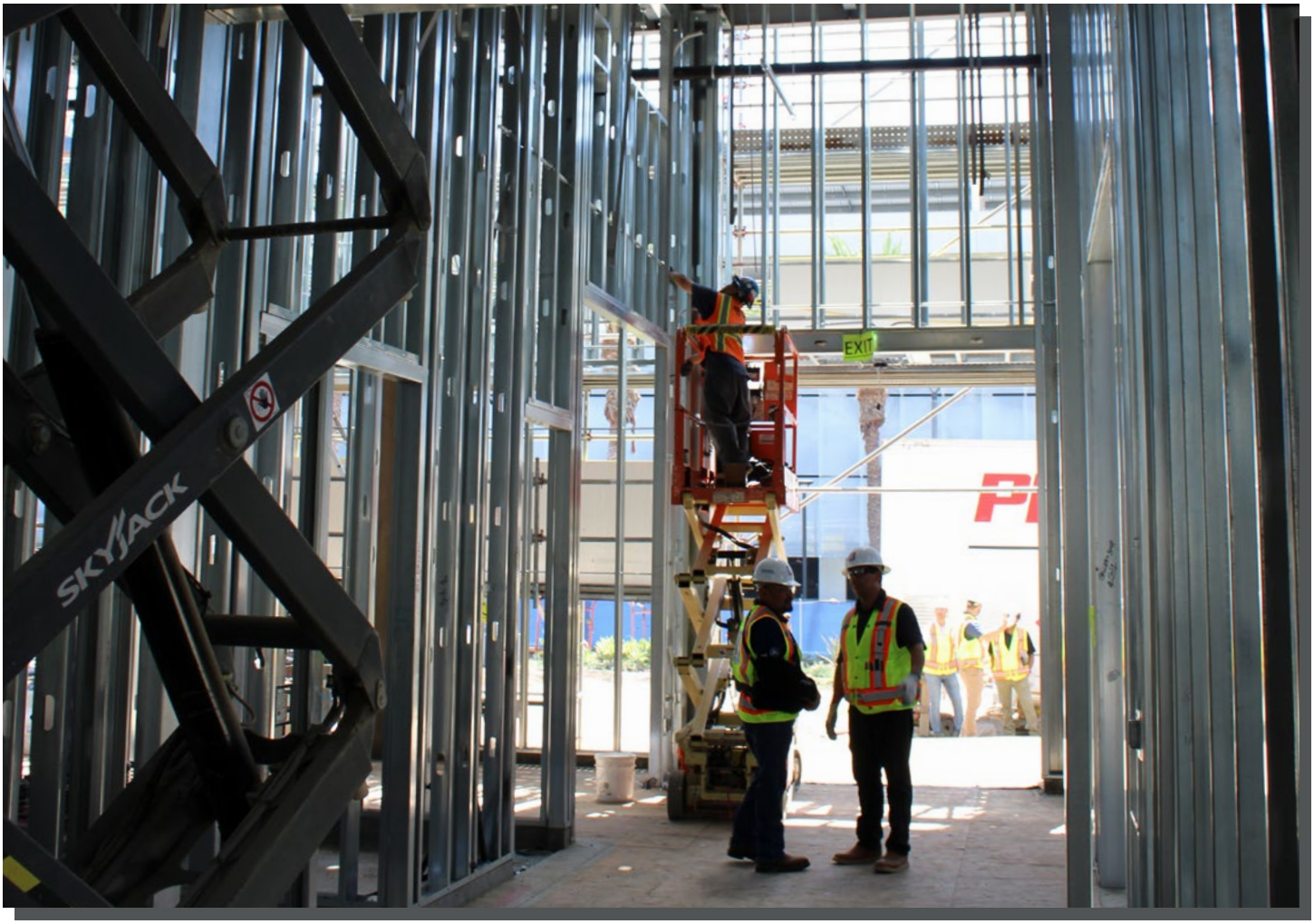

## 40 psf Lateral Load

| Wall Height (ft) | Spacing (in.) o.c. | 362S137-(mils) | | | | 362S162-(mils) | | | | | 362S200-(mils) | | | | | 362S250-(mils) | | | |
|---|---|---|---|---|---|---|---|---|---|---|---|---|---|---|---|---|---|---|---|
| | | 33 ksi | | 50 ksi | | 33 ksi | | 50 ksi | | | 33 ksi | | 50 ksi | | | 33 ksi | 50 ksi | | |
| | | 33 | 43 | 54 | 68 | 33 | 43 | 54 | 68 | 97 | 97 | 33 | 54 | 68 | 97 | 43 | 54 | 68 | 97 |
| 8 | 12 | 0.31 c | 0.92 b | 2.18 a | 3.24 a | 0.6 b | 1.31 a | 2.96 a | 4.19 a | 6.55 a | 0.87 b | 1.92 a | 3.88 a | 6.62 a | 8.22 a | 2.26 a | 4.47 a | 6.29 a | 9.43 a |
| | 16 | | 0.47 c | 1.83 b | 2.93 a | 0.12 d | 0.86 c | 2.57 b | 3.84 a | 6.2 a | 0.35 c | 1.4 b | 3.44 a | 6.1 a | 7.85 a | 1.71 a | 3.99 a | 5.81 a | 9 a |
| | 24 | | | 1.12 d | 2.31 c | | -0.06 d | 1.8 d | 3.14 c | 5.49 a | | 0.38 d | 2.55 c | 5.07 b | 7.1 a | 0.6 c | 3.03 b | 4.87 a | 8.13 a |
| 9 | 12 | | 0.55 d | 1.81 c | 2.84 b | 0.21 d | 0.91 c | 2.51 b | 3.69 a | 5.87 a | 0.44 c | 1.45 b | 3.32 a | 5.85 a | 7.39 a | 1.77 a | 3.91 a | 5.53 a | 8.49 a |
| | 16 | | | 1.38 d | 2.47 c | | 0.35 d | 2.05 c | 3.27 b | 5.45 a | | 0.82 c | 2.8 c | 5.23 a | 6.95 a | 1.09 c | 3.33 b | 4.98 a | 7.98 a |
| | 24 | | | 0.53 e | 1.73 e | | | 1.12 e | 2.43 d | 4.61 c | | | 1.74 d | 4 c | 6.07 b | | 2.16 d | 3.86 c | 6.95 a |
| 10 | 12 | | 0.16 e | 1.42 d | 2.42 c | | 0.47 d | 2.05 c | 3.16 b | 5.15 a | | 0.96 d | 2.75 c | 5.02 b | 6.52 a | 1.25 c | 3.31 b | 4.76 a | 7.51 a |
| | 16 | | | 0.93 e | 1.99 d | | | 1.51 d | 2.68 d | 4.68 b | | 0.23 e | 2.14 d | 4.31 c | 6.02 a | 0.43 d | 2.63 c | 4.12 b | 6.93 a |
| | 24 | | | | 1.13 e | | | 0.43 e | 1.72 e | 3.72 d | | | 0.92 e | 2.9 e | 5.02 c | | 1.27 e | 2.85 d | 5.76 c |
| 12 | 12 | | | 0.66 e | 1.58 e | | | 1.12 e | 2.11 e | 3.72 d | | | 1.62 e | 3.37 d | 4.79 c | 0.16 e | 2.02 d | 3.25 c | 5.56 b |
| | 16 | | | 0.04 f | 1.05 f | | | 0.47 f | 1.53 e | 3.15 e | | | 0.89 e | 2.53 e | 4.2 d | | 1.2 e | 2.49 d | 4.87 c |
| | 24 | | | | | | | | 0.38 f | 2.02 f | | | | 0.85 f | 3.02 e | | | 0.97 e | 3.48 e |
| 14 | 12 | | | | 0.84 f | | | 0.35 f | 1.22 f | 2.53 e | | | 0.68 f | 2 e | 3.37 e | | 0.93 e | 1.99 e | 3.93 d |
| | 16 | | | | 0.24 f | | | | 0.58 f | 1.9 f | | | | 1.07 f | 2.72 e | | 0.01 f | 1.14 f | 3.16 e |
| | 24 | | | | | | | | | 0.65 f | | | | | 1.42 f | | | | 1.61 f |
| 16 | 12 | | | | 0.24 f | | | | | 1.59 f | | | | 0.94 f | 2.27 f | | 0.07 f | 1 f | 2.65 e |
| | 16 | | | | | | | | | 0.92 f | | | | | 1.57 f | | | 0.08 f | 1.82 f |
| | 24 | | | | | | | | | | | | | | 0.18 | | | | 0.16 f |

## 40 psf Lateral Load

| Wall Height (ft) | Spacing (in.) o.c. | 362S300-(mils) | | | 600S137-(mils) | | | | | 600S162-(mils) | | | | | | 600S200-(mils) | |
|---|---|---|---|---|---|---|---|---|---|---|---|---|---|---|---|---|---|
| | | 50 ksi | | | 33 ksi | | 50 ksi | | | 33 ksi | | 50 ksi | | | | 33 ksi | |
| | | 54 | 68 | 97 | 33 | 43 | 54 | 68 | 97 | 33 | 43 | 54 | 68 | 97 | 118 | 33 | 43 |
| 8 | 12 | 4.55 a | 6.74 a | 10.66 a | 1.05 a | 1.81 a | 3.23 a | 4.47 a | 7.02 a | 1.68 a | 2.68 a | 4.9 a | 6.76 a | 10.67 a | 13.49 a | 2.03 a | 3.42 a |
| | 16 | 4.08 a | 6.26 a | 10.22 a | 0.78 a | 1.54 a | 3.01 a | 4.25 a | 6.82 a | 1.4 a | 2.4 a | 4.64 a | 6.51 a | 10.41 a | 13.23 a | 1.72 a | 3.1 a |
| | 24 | 3.13 b | 5.3 a | 9.34 a | 0.22 a | 1.01 a | 2.58 a | 3.83 a | 6.44 a | 0.82 a | 1.85 a | 4.11 a | 6.01 a | 9.89 a | 12.69 a | 1.08 a | 2.44 a |
| 9 | 12 | 3.99 a | 6 a | 9.77 a | 0.83 a | 1.6 a | 3.05 a | 4.3 a | 6.86 a | 1.45 a | 2.46 a | 4.69 a | 6.56 a | 10.46 a | 13.28 a | 1.77 a | 3.14 a |
| | 16 | 3.42 a | 5.42 a | 9.24 a | 0.48 a | 1.26 a | 2.78 a | 4.03 a | 6.62 a | 1.08 a | 2.11 a | 4.35 a | 6.25 a | 10.13 a | 12.94 a | 1.37 a | 2.72 a |
| | 24 | 2.28 c | 4.27 b | 8.18 a | | 0.59 a | 2.23 a | 3.49 a | 6.13 a | 0.36 b | 1.41 a | 3.69 a | 5.61 a | 9.47 a | 12.27 a | 0.57 a | 1.9 a |
| 10 | 12 | 3.41 a | 5.24 a | 8.7 a | 0.59 a | 1.36 a | 2.86 a | 4.11 a | 6.69 a | 1.18 a | 2.2 a | 4.44 a | 6.34 a | 10.23 a | 13.04 a | 1.48 a | 2.81 a |
| | 16 | 2.74 c | 4.57 b | 8.09 a | 0.16 b | 0.95 a | 2.52 a | 3.77 a | 6.39 a | 0.74 a | 1.77 a | 4.03 a | 5.95 a | 9.82 a | 12.63 a | 0.99 a | 2.31 a |
| | 24 | 1.4 d | 3.24 d | 6.88 b | | 0.12 c | 1.85 b | 3.11 a | 5.79 a | | 0.92 b | 3.21 a | 5.17 a | 9.01 a | 11.79 a | 0.01 c | 1.3 a |
| 12 | 12 | 2.27 d | 3.76 c | 6.55 a | 0.02 c | 0.81 b | 2.41 a | 3.67 a | 6.29 a | 0.58 c | 1.6 a | 3.78 a | 5.71 a | 9.69 a | 12.49 a | 0.81 b | 2.09 a |
| | 16 | 1.4 e | 2.93 d | 5.83 c | | 0.22 c | 1.93 b | 3.19 a | 5.86 a | | 1 c | 3.2 b | 5.16 a | 9.11 a | 11.89 a | 0.13 c | 1.38 b |
| | 24 | | 1.28 e | 4.39 d | | | 0.95 d | 2.23 c | 4.99 b | | | 2.06 d | 4.05 c | 7.94 a | 10.69 a | | |
| 14 | 12 | 1.14 e | 2.39 e | 4.73 d | | 0.17 d | 1.89 c | 3.15 b | 5.82 a | | 0.92 d | 3.01 c | 4.87 a | 8.77 a | 11.84 a | 0.07 d | 1.27 c |
| | 16 | 0.13 f | 1.45 e | 3.92 e | | | 1.22 d | 2.49 d | 5.23 b | | 0.12 e | 2.26 d | 4.15 c | 8 a | 11.03 a | | 0.35 d |
| | 24 | | | 2.31 f | | | | 1.19 e | 4.06 d | | | 0.77 e | 2.72 d | 6.46 c | 9.39 c | | |
| 16 | 12 | 0.18 f | 1.26 f | 3.29 e | | | 1.28 e | 2.55 d | 5.28 c | | 0.18 e | 2.17 d | 3.92 c | 7.49 b | 10.26 a | | 0.4 d |
| | 16 | | 0.25 f | 2.43 f | | | 0.41 e | 1.69 e | 4.51 d | | | 1.26 e | 3.05 d | 6.56 c | 9.27 c | | |
| | 24 | | | 0.69 f | | | | | 2.97 e | | | | 1.3 e | 4.69 e | 7.3 d | | |

See Combined Axial and Lateral Load Table Notes

## 40 psf Lateral Load

| Wall Height (ft) | Spacing (in.) o.c. | 600S200-(mils) | | | | 600S250-(mils) | | | | | 600S300-(mils) | | | | 600S350-(mils) | | | |
|---|---|---|---|---|---|---|---|---|---|---|---|---|---|---|---|---|---|---|
| | | 50 ksi | | | | 33 ksi | 50 ksi | | | | 50 ksi | | | | 50 ksi | | | |
| | | 54 | 68 | 97 | 118 | 43 | 54 | 68 | 97 | 118 | 54 | 68 | 97 | 118 | 54 | 68 | 97 | 118 |
| 8 | 12 | 6.52 a | 8.94 a | 14.43 a | 18.69 a | 3.76 a | 6.77 a | 10.02 a | 16.93 a | 21.79 a | 7.07 a | 10.22 a | 18.25 a | 23.89 a | 9.33 a | 13.77 a | 22.81 a | 30.34 a |
| | 16 | 6.2 a | 8.62 a | 14.13 a | 18.37 a | 3.42 a | 6.46 a | 9.68 a | 16.55 a | 21.4 a | 6.76 a | 9.89 a | 17.88 a | 23.51 a | 8.99 a | 13.41 a | 22.41 a | 29.93 a |
| | 24 | 5.57 a | 7.99 a | 13.51 a | 17.73 a | 2.73 a | 5.83 a | 8.99 a | 15.81 a | 20.63 a | 6.13 a | 9.21 a | 17.14 a | 22.74 a | 8.32 a | 12.69 a | 21.62 a | 29.11 a |
| 9 | 12 | 6.19 a | 8.58 a | 14.01 a | 18.2 a | 3.46 a | 6.45 a | 9.61 a | 16.36 a | 21.13 a | 6.74 a | 9.82 a | 17.66 a | 23.21 a | 8.93 a | 13.29 a | 22.14 a | 29.37 a |
| | 16 | 5.79 a | 8.18 a | 13.62 a | 17.79 a | 3.03 a | 6.06 a | 9.18 a | 15.9 a | 20.65 a | 6.34 a | 9.4 a | 17.2 a | 22.73 a | 8.51 a | 12.84 a | 21.65 a | 28.87 a |
| | 24 | 5 a | 7.38 a | 12.86 a | 16.99 a | 2.18 a | 5.27 a | 8.33 a | 14.97 a | 19.69 a | 5.55 a | 8.56 a | 16.27 a | 21.78 a | 7.67 a | 11.93 a | 20.66 a | 27.85 a |
| 10 | 12 | 5.81 a | 8.16 a | 13.51 a | 17.61 a | 3.13 a | 6.08 a | 9.16 a | 15.72 a | 20.38 a | 6.37 a | 9.38 a | 16.99 a | 22.45 a | 8.48 a | 12.75 a | 21.4 a | 28.29 a |
| | 16 | 5.33 a | 7.68 a | 13.05 a | 17.12 a | 2.61 a | 5.61 a | 8.64 a | 15.16 a | 19.8 a | 5.89 a | 8.87 a | 16.43 a | 21.87 a | 7.98 a | 12.2 a | 20.8 a | 27.68 a |
| | 24 | 4.37 a | 6.72 a | 12.12 a | 16.15 a | 1.56 a | 4.66 a | 7.59 a | 14.03 a | 18.64 a | 4.93 a | 7.84 a | 15.31 a | 20.71 a | 6.96 a | 11.11 a | 19.6 a | 26.46 a |
| 12 | 12 | 4.95 a | 7.2 a | 12.33 a | 16.19 a | 2.38 a | 5.25 a | 8.12 a | 14.22 a | 18.59 a | 5.52 a | 8.41 a | 15.45 a | 20.7 a | 7.49 a | 11.53 a | 19.75 a | 25.84 a |
| | 16 | 4.29 a | 6.53 a | 11.69 a | 15.52 a | 1.64 a | 4.59 a | 7.4 a | 13.45 a | 17.8 a | 4.85 a | 7.69 a | 14.69 a | 19.9 a | 6.78 a | 10.78 a | 18.92 a | 25.01 a |
| | 24 | 2.96 c | 5.2 b | 10.41 a | 14.17 a | 0.17 c | 3.27 b | 5.96 a | 11.91 a | 16.22 a | 3.52 b | 6.27 a | 13.16 a | 18.31 a | 5.38 a | 9.26 a | 17.27 a | 23.36 a |
| 14 | 12 | 3.97 b | 6.08 a | 10.9 a | 14.45 a | 1.53 b | 4.34 a | 6.95 a | 12.48 a | 16.51 a | 4.57 a | 7.31 a | 13.72 a | 18.78 a | 6.37 a | 10.16 a | 17.74 a | 23.1 a |
| | 16 | 3.12 c | 5.23 b | 10.09 a | 13.6 a | 0.56 d | 3.48 c | 6.02 a | 11.5 a | 15.51 a | 3.71 b | 6.38 a | 12.75 a | 17.76 a | 5.47 a | 9.19 a | 16.68 a | 22.05 a |
| | 24 | 1.43 e | 3.53 d | 8.46 c | 11.89 b | | 1.76 d | 4.16 c | 9.55 b | 13.51 a | 1.98 d | 4.53 c | 10.8 a | 15.7 a | 3.66 c | 7.23 b | 14.56 a | 19.97 a |
| 16 | 12 | 2.94 d | 4.87 c | 9.32 a | 12.51 a | 0.62 d | 3.39 c | 5.72 b | 10.62 a | 14.26 a | 3.56 c | 6.12 b | 11.91 a | 16.36 a | 5.2 b | 8.7 a | 15.32 a | 20.21 a |
| | 16 | 1.92 e | 3.85 d | 8.35 c | 11.49 b | | 2.32 d | 4.58 c | 9.45 b | 13.06 a | 2.49 d | 4.98 c | 10.73 a | 15.13 a | 4.09 c | 7.5 b | 14.06 a | 18.96 a |
| | 24 | | 1.82 e | 6.39 d | 9.45 d | | 0.18 e | 2.31 e | 7.12 d | 10.67 c | 0.37 e | 2.68 e | 8.37 c | 12.67 b | 1.88 e | 5.1 d | 11.53 c | 16.48 b |

## 40 psf Lateral Load

| Wall Height (ft) | Spacing (in.) o.c. | 800S137-(mils) | | | | | 800S162-(mils) | | | | | | 800S200-(mils) | | | | | |
|---|---|---|---|---|---|---|---|---|---|---|---|---|---|---|---|---|---|---|
| | | 33 ksi | | 50 ksi | | | 33 ksi | | 50 ksi | | | | 33 ksi | | 50 ksi | | | |
| | | 33 | 43 | 54 | 68 | 97 | 33 | 43 | 54 | 68 | 97 | 118 | 33 | 43 | 54 | 68 | 97 | 118 |
| 8 | 12 | 1.1 a* | 1.94 a | 3.17 a | 4.36 a | 6.9 a | 1.65 a* | 2.77 a | 4.91 a | 6.73 a | 10.79 a | 13.85 a | 2.16 a* | 3.88 a | 7.15 a | 9.69 a | 15.4 a | 19.85 a |
| | 16 | 0.87 a* | 1.76 a | 3.03 a | 4.22 a | 6.77 a | 1.37 a* | 2.55 a | 4.72 a | 6.54 a | 10.61 a | 13.67 a | 1.86 a* | 3.65 a | 6.93 a | 9.46 a | 15.18 a | 19.63 a |
| | 24 | 0.42 a* | 1.39 a | 2.74 a | 3.94 a | 6.51 a | 0.82 a* | 2.1 a | 4.33 a | 6.17 a | 10.26 a | 13.32 a | 1.26 a* | 3.19 a | 6.48 a | 9.02 a | 14.76 a | 19.18 a |
| 9 | 12 | 0.92 a* | 1.8 a | 3.06 a | 4.25 a | 6.79 a | 1.43 a* | 2.59 a | 4.76 a | 6.58 a | 10.65 a | 13.71 a | 1.93 a* | 3.7 a | 6.97 a | 9.51 a | 15.23 a | 19.67 a |
| | 16 | 0.63 a* | 1.56 a | 2.87 a | 4.07 a | 6.63 a | 1.08 a* | 2.31 a | 4.51 a | 6.34 a | 10.43 a | 13.49 a | 1.55 a* | 3.41 a | 6.69 a | 9.23 a | 14.96 a | 19.39 a |
| | 24 | 0.05 a* | 1.09 a | 2.5 a | 3.72 a | 6.31 a | 0.38 a* | 1.75 a | 4.02 a | 5.86 a | 9.98 a | 13.04 a | 0.78 a* | 2.83 a | 6.12 a | 8.66 a | 14.42 a | 18.82 a |
| 10 | 12 | 0.72 a* | 1.63 a | 2.93 a | 4.12 a | 6.68 a | 1.18 a* | 2.39 a | 4.58 a | 6.41 a | 10.49 a | 13.55 a | 1.66 a* | 3.49 a | 6.77 a | 9.31 a | 15.04 a | 19.47 a |
| | 16 | 0.36 a* | 1.34 a | 2.7 a | 3.9 a | 6.48 a | 0.75 a* | 2.05 a | 4.28 a | 6.12 a | 10.22 a | 13.28 a | 1.19 a* | 3.14 a | 6.42 a | 8.96 a | 14.7 a | 19.12 a |
| | 24 | | 0.77 a | 2.24 a | 3.46 a | 6.08 a | | 1.35 a | 3.67 a | 5.53 a | 9.67 a | 12.73 a | 0.25 a* | 2.42 a | 5.71 a | 8.27 a | 14.04 a | 18.43 a |
| 12 | 12 | 0.24 a* | 1.25 a | 2.63 a | 3.83 a | 6.42 a | 0.61 a* | 1.94 a | 4.18 a | 6.02 a | 10.13 a | 13.19 a | 1.03 a* | 3.01 a | 6.3 a | 8.85 a | 14.6 a | 19.01 a |
| | 16 | | 0.84 a | 2.3 a | 3.52 a | 6.13 a | | 1.44 a | 3.74 a | 5.6 a | 9.74 a | 12.8 a | 0.36 a* | 2.5 a | 5.79 a | 8.35 a | 14.12 a | 18.51 a |
| | 24 | | 0.01 b | 1.64 a | 2.88 a | 5.56 a | | 0.43 a | 2.86 a | 4.74 a | 8.95 a | 12.01 a | | 1.46 a | 4.78 a | 7.35 a | 13.16 a | 17.51 a |
| 14 | 12 | | 0.8 a | 2.27 a | 3.49 a | 6.11 a | | 1.39 a | 3.7 a | 5.56 a | 9.7 a | 12.76 a | 0.3 a* | 2.42 a | 5.62 a | 8.15 a | 14 a | 18.47 a |
| | 16 | | 0.24 b | 1.82 a | 3.06 a | 5.72 a | | 0.71 b | 3.11 a | 4.98 a | 9.17 a | 12.23 a | | 1.72 a | 4.94 a | 7.49 a | 13.35 a | 17.78 a |
| | 24 | | | 0.93 c | 2.2 b | 4.94 a | | | 1.91 c | 3.82 a | 8.1 a | 11.15 a | | 0.34 c | 3.59 b | 6.15 a | 12.05 a | 16.42 a |
| 16 | 12 | | 0.28 c | 1.86 b | 3.09 a | 5.75 a | | 0.77 b | 3.16 a | 5.03 a | 9.21 a | 12.27 a | | 1.74 a | 4.82 a | 7.28 a | 12.94 a | 17.33 a |
| | 16 | | | 1.28 c | 2.53 b | 5.24 a | | | 2.38 c | 4.27 a | 8.51 a | 11.57 a | | 0.86 c | 3.97 b | 6.44 a | 12.13 a | 16.46 a |
| | 24 | | | 0.11 e | 1.4 d | 4.22 c | | | 0.82 d | 2.75 c | 7.11 b | 10.17 a | | | 2.27 d | 4.75 c | 10.49 a | 14.73 a |

See Combined Axial and Lateral Load Table Notes

# 40 psf Lateral Load

| Wall Height (ft) | Spacing (in.) o.c. | 800S250-(mils) | | | | | 800S300-(mils) | | | | 800S350-(mils) | | | |
|---|---|---|---|---|---|---|---|---|---|---|---|---|---|---|
| | | 33 ksi | 50 ksi | | | | 50 ksi | | | | 50 ksi | | | |
| | | 43 | 54 | 68 | 97 | 118 | 54 | 68 | 97 | 118 | 54 | 68 | 97 | 118 |
| 8 | 12 | 4.24 a | 7.51 a | 11.09 a | 18.83 a | 24.68 a | 7.83 a | 11.37 a | 20.59 a | 27.03 a | 10.26 a | 15.05 a | 25.09 a | 33.51 a |
| | 16 | 3.99 a | 7.27 a | 10.84 a | 18.56 a | 24.39 a | 7.59 a | 11.12 a | 20.31 a | 26.74 a | 10 a | 14.78 a | 24.8 a | 33.21 a |
| | 24 | 3.49 a | 6.8 a | 10.34 a | 18.01 a | 23.81 a | 7.09 a | 10.63 a | 19.75 a | 26.16 a | 9.48 a | 14.26 a | 24.21 a | 32.59 a |
| 9 | 12 | 4.03 a | 7.29 a | 10.85 a | 18.54 a | 24.31 a | 7.6 a | 11.11 a | 20.23 a | 26.62 a | 9.98 a | 14.74 a | 24.73 a | 33.04 a |
| | 16 | 3.71 a | 6.99 a | 10.54 a | 18.2 a | 23.95 a | 7.29 a | 10.8 a | 19.88 a | 26.26 a | 9.66 a | 14.41 a | 24.36 a | 32.66 a |
| | 24 | 3.08 a | 6.4 a | 9.92 a | 17.5 a | 23.22 a | 6.67 a | 10.19 a | 19.18 a | 25.53 a | 9.01 a | 13.75 a | 23.62 a | 31.89 a |
| 10 | 12 | 3.79 a | 7.04 a | 10.59 a | 18.21 a | 23.88 a | 7.33 a | 10.82 a | 19.81 a | 26.15 a | 9.67 a | 14.4 a | 24.27 a | 32.5 a |
| | 16 | 3.4 a | 6.68 a | 10.2 a | 17.78 a | 23.44 a | 6.95 a | 10.45 a | 19.38 a | 25.7 a | 9.27 a | 13.99 a | 23.82 a | 32.03 a |
| | 24 | 2.63 a | 5.95 a | 9.44 a | 16.94 a | 22.55 a | 6.19 a | 9.7 a | 18.52 a | 24.81 a | 8.48 a | 13.19 a | 22.91 a | 31.09 a |
| 12 | 12 | 3.25 a | 6.46 a | 9.96 a | 17.41 a | 22.82 a | 6.71 a | 10.14 a | 18.79 a | 24.99 a | 8.95 a | 13.59 a | 23.11 a | 31.24 a |
| | 16 | 2.7 a | 5.95 a | 9.41 a | 16.81 a | 22.2 a | 6.17 a | 9.61 a | 18.19 a | 24.36 a | 8.39 a | 13.02 a | 22.47 a | 30.58 a |
| | 24 | 1.59 a | 4.91 a | 8.32 a | 15.6 a | 20.94 a | 5.09 a | 8.54 a | 16.99 a | 23.1 a | 7.27 a | 11.88 a | 21.2 a | 29.25 a |
| 14 | 12 | 2.61 a | 5.77 a | 9.12 a | 16.25 a | 21.47 a | 5.98 a | 9.32 a | 17.55 a | 23.55 a | 8.1 a | 12.62 a | 21.74 a | 29.47 a |
| | 16 | 1.87 a | 5.08 a | 8.4 a | 15.46 a | 20.64 a | 5.26 a | 8.61 a | 16.76 a | 22.72 a | 7.37 a | 11.87 a | 20.9 a | 28.6 a |
| | 24 | 0.39 b | 3.7 a | 6.96 a | 13.87 a | 18.98 a | 3.83 a | 7.2 a | 15.17 a | 21.06 a | 5.89 a | 10.35 a | 19.22 a | 26.85 a |
| 16 | 12 | 1.89 a | 4.98 a | 8.15 a | 14.87 a | 19.84 a | 5.15 a | 8.38 a | 16.12 a | 21.9 a | 7.17 a | 11.52 a | 20.23 a | 27.28 a |
| | 16 | 0.94 b | 4.11 a | 7.24 a | 13.87 a | 18.8 a | 4.25 a | 7.49 a | 15.13 a | 20.86 a | 6.24 a | 10.57 a | 19.17 a | 26.19 a |
| | 24 | | 2.36 c | 5.43 b | 11.88 a | 16.73 a | 2.44 c | 5.71 b | 13.15 a | 18.77 a | 4.37 b | 8.66 a | 17.05 a | 24.02 a |

See Combined Axial and Lateral Load Table Notes

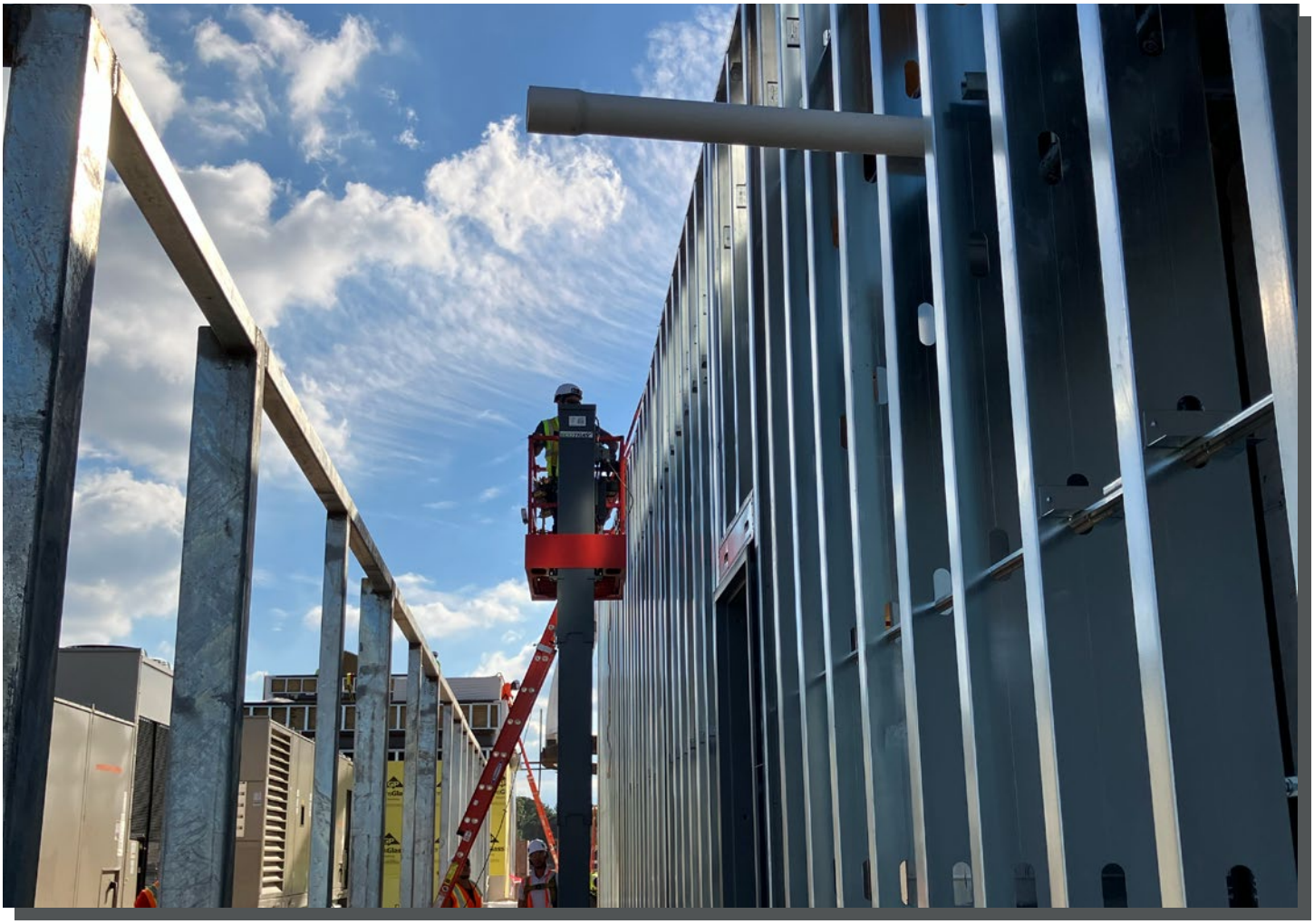

## 50 psf Lateral Load

| Wall Height (ft) | Spacing (in.) o.c. | 362S137-(mils) | | | | 362S162-(mils) | | | | | 362S200-(mils) | | | | | 362S250-(mils) | | | |
|---|---|---|---|---|---|---|---|---|---|---|---|---|---|---|---|---|---|---|---|
| | | 33 ksi | | 50 ksi | | 33 ksi | | 50 ksi | | | 33 ksi | 50 ksi | | | | 33 ksi | 50 ksi | | |
| | | 33 | 43 | 54 | 68 | 33 | 43 | 54 | 68 | 97 | 97 | 33 | 54 | 68 | 97 | 43 | 54 | 68 | 97 |
| 8 | 12 | | 0.58 c | 1.92 b | 3 a | 0.24 c | 0.97 b | 2.67 a | 3.93 a | 6.28 a | 0.48 c | 1.53 a | 3.55 a | 6.23 a | 7.94 a | 1.85 a | 4.11 a | 5.93 a | 9.11 a |
| | 16 | | 0.03 d | 1.47 c | 2.62 b | | 0.4 d | 2.18 c | 3.49 b | 5.84 a | | 0.89 c | 3 b | 5.59 a | 7.48 a | 1.15 b | 3.51 a | 5.34 a | 8.56 a |
| | 24 | | | 0.59 e | 1.84 d | | | 1.21 d | 2.62 d | 4.96 b | | | 1.89 d | 4.29 c | 6.54 a | | 2.31 c | 4.17 b | 7.48 a |
| 9 | 12 | | 0.14 d | 1.49 d | 2.56 c | | 0.49 d | 2.16 c | 3.37 b | 5.56 a | | 0.98 c | 2.93 b | 5.39 a | 7.06 a | 1.26 b | 3.47 a | 5.11 a | 8.1 a |
| | 16 | | | 0.96 e | 2.1 d | | | 1.58 d | 2.85 c | 5.03 b | | 0.2 d | 2.27 d | 4.61 c | 6.51 a | 0.41 d | 2.74 c | 4.42 b | 7.46 a |
| | 24 | | | | 1.17 e | | | 0.42 e | 1.81 e | 3.99 d | | | 0.94 e | 3.07 d | 5.41 c | | 1.29 d | 3.02 d | 6.18 b |
| 10 | 12 | | | 1.05 e | 2.1 d | | | 1.65 d | 2.8 c | 4.8 b | | 0.41 d | 2.29 d | 4.49 c | 6.14 a | 0.64 d | 2.8 c | 4.28 b | 7.07 a |
| | 16 | | | 0.43 e | 1.56 e | | | 0.97 e | 2.2 d | 4.2 c | | | 1.53 e | 3.6 d | 5.52 c | | 1.95 d | 3.49 c | 6.34 b |
| | 24 | | | | 0.48 f | | | | 1 e | 3 e | | | 0.01 f | 1.83 e | 4.27 d | | 0.25 e | 1.89 e | 4.88 d |
| 12 | 12 | | | 0.2 f | 1.19 e | | | 0.63 f | 1.68 e | 3.29 d | | | 1.07 e | 2.74 e | 4.35 d | | 1.4 e | 2.68 d | 5.04 c |
| | 16 | | | | 0.52 f | | | | 0.95 f | 2.59 e | | | 0.16 f | 1.69 e | 3.61 e | | 0.38 f | 1.73 e | 4.18 d |
| | 24 | | | | | | | | | 1.17 f | | | | | 2.14 f | | | | 2.44 e |
| 14 | 12 | | | | 0.39 f | | | | 0.74 f | 2.06 f | | | 0.07 f | 1.3 f | 2.88 e | | 0.24 f | 1.35 e | 3.35 e |
| | 16 | | | | | | | | | 1.27 f | | | | 0.14 f | 2.07 f | | | 0.29 f | 2.38 e |
| | 24 | | | | | | | | | | | | | | 0.44 f | | | | 0.46 f |
| 16 | 12 | | | | | | | | | 1.09 f | | | | 0.19 f | 1.74 f | | | 0.31 f | 2.02 f |
| | 16 | | | | | | | | | 0.26 | | | | | 0.88 f | | | | 0.99 f |
| | 24 | | | | | | | | | | | | | | | | | | |

## 50 psf Lateral Load

| Wall Height (ft) | Spacing (in.) o.c. | 362S300-(mils) | | | 600S137-(mils) | | | | | 600S162-(mils) | | | | | | 600S200-(mils) | |
|---|---|---|---|---|---|---|---|---|---|---|---|---|---|---|---|---|---|
| | | 50 ksi | | | 33 ksi | | 50 ksi | | | 33 ksi | | 50 ksi | | | | 33 ksi | |
| | | 54 | 68 | 97 | 33 | 43 | 54 | 68 | 97 | 33 | 43 | 54 | 68 | 97 | 118 | 33 | 43 |
| 8 | 12 | 4.55 a | 6.74 a | 10.66 a | 1.05 a | 1.81 a | 3.23 a | 4.47 a | 7.02 a | 1.68 a | 2.68 a | 4.9 a | 6.76 a | 10.67 a | 13.49 a | 2.03 a | 3.42 a |
| | 16 | 4.08 a | 6.26 a | 10.22 a | 0.78 a | 1.54 a | 3.01 a | 4.25 a | 6.82 a | 1.4 a | 2.4 a | 4.64 a | 6.51 a | 10.41 a | 13.23 a | 1.72 a | 3.1 a |
| | 24 | 3.13 b | 5.3 a | 9.34 a | 0.22 a | 1.01 a | 2.58 a | 3.83 a | 6.44 a | 0.82 a | 1.85 a | 4.11 a | 6.01 a | 9.89 a | 12.69 a | 1.08 a | 2.44 a |
| 9 | 12 | 3.99 a | 6 a | 9.77 a | 0.83 a | 1.6 a | 3.05 a | 4.3 a | 6.86 a | 1.45 a | 2.46 a | 4.69 a | 6.56 a | 10.46 a | 13.28 a | 1.77 a | 3.14 a |
| | 16 | 3.42 a | 5.42 a | 9.24 a | 0.48 a | 1.26 a | 2.78 a | 4.03 a | 6.62 a | 1.08 a | 2.11 a | 4.35 a | 6.25 a | 10.13 a | 12.94 a | 1.37 a | 2.72 a |
| | 24 | 2.28 c | 4.27 b | 8.18 a | | 0.59 a | 2.23 a | 3.49 a | 6.13 a | 0.36 b | 1.41 a | 3.69 a | 5.61 a | 9.47 a | 12.27 a | 0.57 a | 1.9 a |
| 10 | 12 | 3.41 a | 5.24 a | 8.7 a | 0.59 a | 1.36 a | 2.86 a | 4.11 a | 6.69 a | 1.18 a | 2.2 a | 4.44 a | 6.34 a | 10.23 a | 13.04 a | 1.48 a | 2.81 a |
| | 16 | 2.74 c | 4.57 b | 8.09 a | 0.16 b | 0.95 a | 2.52 a | 3.77 a | 6.39 a | 0.74 a | 1.77 a | 4.03 a | 5.95 a | 9.82 a | 12.63 a | 0.99 a | 2.31 a |
| | 24 | 1.4 d | 3.24 d | 6.88 b | | 0.12 c | 1.85 b | 3.11 a | 5.79 a | | 0.92 b | 3.21 a | 5.17 a | 9.01 a | 11.79 a | 0.01 c | 1.3 a |
| 12 | 12 | 2.27 d | 3.76 c | 6.55 a | 0.02 c | 0.81 b | 2.41 a | 3.67 a | 6.29 a | 0.58 c | 1.6 a | 3.78 a | 5.71 a | 9.69 a | 12.49 a | 0.81 b | 2.09 a |
| | 16 | 1.4 e | 2.93 d | 5.83 c | | 0.22 c | 1.93 b | 3.19 a | 5.86 a | | 1 c | 3.2 b | 5.16 a | 9.11 a | 11.89 a | 0.13 c | 1.38 b |
| | 24 | | 1.28 e | 4.39 d | | | 0.95 d | 2.23 c | 4.99 b | | | 2.06 d | 4.05 c | 7.94 a | 10.69 a | | |
| 14 | 12 | 1.14 e | 2.39 e | 4.73 d | | 0.17 d | 1.89 c | 3.15 b | 5.82 a | | 0.92 d | 3.01 c | 4.87 a | 8.77 a | 11.84 a | 0.07 d | 1.27 c |
| | 16 | 0.13 f | 1.45 e | 3.92 e | | | 1.22 d | 2.49 d | 5.23 b | | 0.12 e | 2.26 d | 4.15 c | 8 a | 11.03 a | | 0.35 d |
| | 24 | | | 2.31 f | | | | 1.19 e | 4.06 d | | | 0.77 e | 2.72 d | 6.46 c | 9.39 c | | |
| 16 | 12 | 0.18 f | 1.26 f | 3.29 e | | | 1.28 e | 2.55 d | 5.28 c | | 0.18 e | 2.17 d | 3.92 c | 7.49 b | 10.26 a | | 0.4 d |
| | 16 | | 0.25 f | 2.43 f | | | 0.41 e | 1.69 e | 4.51 d | | | 1.26 e | 3.05 d | 6.56 c | 9.27 c | | |
| | 24 | | | 0.69 f | | | | | 2.97 e | | | | 1.3 e | 4.69 e | 7.3 d | | |

See Combined Axial and Lateral Load Table Notes

## 50 psf Lateral Load

| Wall Height (ft) | Spacing (in.) o.c. | 600S200-(mils) | | | | 600S250-(mils) | | | | | 600S300-(mils) | | | | 600S350-(mils) | | | |
|---|---|---|---|---|---|---|---|---|---|---|---|---|---|---|---|---|---|---|
| | | 50 ksi | | | | 33 ksi | 50 ksi | | | | 50 ksi | | | | 50 ksi | | | |
| | | 54 | 68 | 97 | 118 | 43 | 54 | 68 | 97 | 118 | 54 | 68 | 97 | 118 | 54 | 68 | 97 | 118 |
| 8 | 12 | 6.28 a | 8.7 a | 14.2 a | 18.45 a | 3.5 a | 6.54 a | 9.76 a | 16.65 a | 21.5 a | 6.84 a | 9.97 a | 17.97 a | 23.6 a | 9.08 a | 13.5 a | 22.51 a | 30.03 a |
| | 16 | 5.88 a | 8.3 a | 13.82 a | 18.05 a | 3.08 a | 6.15 a | 9.33 a | 16.18 a | 21.02 a | 6.44 a | 9.55 a | 17.51 a | 23.12 a | 8.66 a | 13.05 a | 22.02 a | 29.52 a |
| | 24 | 5.09 a | 7.51 a | 13.06 a | 17.24 a | 2.22 a | 5.36 a | 8.47 a | 15.25 a | 20.06 a | 5.65 a | 8.71 a | 16.58 a | 22.16 a | 7.82 a | 12.14 a | 21.03 a | 28.5 a |
| 9 | 12 | 5.89 a | 8.28 a | 13.72 a | 17.89 a | 3.14 a | 6.15 a | 9.29 a | 16.01 a | 20.77 a | 6.44 a | 9.51 a | 17.31 a | 22.85 a | 8.62 a | 12.95 a | 21.77 a | 28.99 a |
| | 16 | 5.39 a | 7.78 a | 13.24 a | 17.39 a | 2.6 a | 5.66 a | 8.76 a | 15.43 a | 20.17 a | 5.95 a | 8.98 a | 16.73 a | 22.25 a | 8.09 a | 12.39 a | 21.15 a | 28.36 a |
| | 24 | 4.4 a | 6.79 a | 12.29 a | 16.38 a | 1.53 a | 4.69 a | 7.68 a | 14.27 a | 18.98 a | 4.96 a | 7.93 a | 15.58 a | 21.06 a | 7.05 a | 11.26 a | 19.91 a | 27.09 a |
| 10 | 12 | 5.45 a | 7.8 a | 13.17 a | 17.25 a | 2.74 a | 5.73 a | 8.77 a | 15.3 a | 19.94 a | 6.01 a | 9 a | 16.57 a | 22.01 a | 8.1 a | 12.34 a | 20.95 a | 27.83 a |
| | 16 | 4.85 a | 7.2 a | 12.59 a | 16.64 a | 2.08 a | 5.13 a | 8.12 a | 14.6 a | 19.22 a | 5.41 a | 8.36 a | 15.87 a | 21.29 a | 7.47 a | 11.66 a | 20.2 a | 27.07 a |
| | 24 | 3.65 a | 5.99 a | 11.43 a | 15.41 a | 0.78 b | 3.94 a | 6.81 a | 13.19 a | 17.77 a | 4.2 a | 7.08 a | 14.48 a | 19.84 a | 6.2 a | 10.29 a | 18.7 a | 25.54 a |
| 12 | 12 | 4.45 a | 6.7 a | 11.85 a | 15.69 a | 1.83 a | 4.76 a | 7.58 a | 13.64 a | 18 a | 5.02 a | 7.87 a | 14.88 a | 20.1 a | 6.96 a | 10.96 a | 19.13 a | 25.22 a |
| | 16 | 3.62 b | 5.87 a | 11.05 a | 14.85 a | 0.91 b | 3.93 a | 6.68 a | 12.68 a | 17.01 a | 4.19 a | 6.98 a | 13.93 a | 19.11 a | 6.08 a | 10.02 a | 18.09 a | 24.18 a |
| | 24 | 1.97 d | 4.21 c | 9.45 a | 13.17 a | | 2.28 c | 4.88 b | 10.76 a | 15.04 a | 2.52 c | 5.2 b | 12.02 a | 17.11 a | 4.33 b | 8.13 a | 16.03 a | 22.12 a |
| 14 | 12 | 3.33 c | 5.44 b | 10.29 a | 13.81 a | 0.81 c | 3.7 b | 6.25 a | 11.75 a | 15.76 a | 3.92 b | 6.61 a | 12.99 a | 18.01 a | 5.7 a | 9.43 a | 16.94 a | 22.32 a |
| | 16 | 2.28 d | 4.38 c | 9.27 b | 12.74 a | | 2.62 d | 5.09 c | 10.53 a | 14.51 a | 2.84 c | 5.45 b | 11.78 a | 16.73 a | 4.57 c | 8.21 a | 15.62 a | 21.01 a |
| | 24 | 0.16 e | 2.26 e | 7.24 d | 10.61 c | | 0.47 e | 2.77 d | 8.09 c | 12.01 b | 0.68 e | 3.14 d | 9.34 c | 14.16 a | 2.31 d | 5.77 c | 12.97 b | 18.41 a |
| 16 | 12 | 2.17 d | 4.11 d | 8.59 b | 11.74 a | | 2.59 d | 4.87 c | 9.74 b | 13.36 a | 2.76 d | 5.26 c | 11.03 a | 15.44 a | 4.37 c | 7.8 b | 14.37 a | 19.27 a |
| | 16 | 0.9 e | 2.84 e | 7.37 d | 10.47 c | | 1.25 e | 3.44 d | 8.28 c | 11.87 b | 1.43 e | 3.83 d | 9.55 b | 13.9 a | 2.99 d | 6.3 c | 12.79 b | 17.72 a |
| | 24 | | 0.29 f | 4.93 e | 7.91 d | | | 0.6 e | 5.36 e | 8.88 d | | 0.96 e | 6.59 d | 10.83 c | 0.22 e | 3.31 e | 9.63 d | 14.61 c |

## 50 psf Lateral Load

| Wall Height (ft) | Spacing (in.) o.c. | 800S137-(mils) | | | | | 800S162-(mils) | | | | | | 800S200-(mils) | | | | | |
|---|---|---|---|---|---|---|---|---|---|---|---|---|---|---|---|---|---|---|
| | | 33 ksi | | 50 ksi | | | 33 ksi | | 50 ksi | | | | 33 ksi | | 50 ksi | | | |
| | | 33 | 43 | 54 | 68 | 97 | 33 | 43 | 54 | 68 | 97 | 118 | 33 | 43 | 54 | 68 | 97 | 118 |
| 8 | 12 | 0.93 a* | 1.8 a | 3.06 a | 4.26 a | 6.8 a | 1.44 a* | 2.6 a | 4.76 a | 6.59 a | 10.66 a | 13.72 a | 1.94 a* | 3.71 a | 6.98 a | 9.52 a | 15.24 a | 19.68 a |
| | 16 | 0.64 a* | 1.57 a | 2.88 a | 4.08 a | 6.64 a | 1.1 a* | 2.33 a | 4.52 a | 6.35 a | 10.44 a | 13.5 a | 1.56 a* | 3.42 a | 6.7 a | 9.24 a | 14.97 a | 19.4 a |
| | 24 | 0.07 a* | 1.11 a | 2.52 a | 3.73 a | 6.32 a | 0.4 a* | 1.77 a | 4.03 a | 5.88 a | 10 a | 13.06 a | 0.81 a* | 2.85 a | 6.14 a | 8.68 a | 14.44 a | 18.84 a |
| 9 | 12 | 0.7 a* | 1.62 a | 2.92 a | 4.12 a | 6.67 a | 1.17 a* | 2.38 a | 4.57 a | 6.4 a | 10.48 a | 13.54 a | 1.64 a* | 3.48 a | 6.76 a | 9.3 a | 15.02 a | 19.46 a |
| | 16 | 0.34 a* | 1.33 a | 2.69 a | 3.89 a | 6.47 a | 0.73 a* | 2.03 a | 4.26 a | 6.1 a | 10.21 a | 13.27 a | 1.16 a* | 3.12 a | 6.4 a | 8.95 a | 14.69 a | 19.11 a |
| | 24 | | 0.74 a | 2.23 a | 3.45 a | 6.07 a | | 1.33 a | 3.64 a | 5.5 a | 9.65 a | 12.71 a | 0.21 a* | 2.39 a | 5.69 a | 8.24 a | 14.01 a | 18.4 a |
| 10 | 12 | 0.45 a* | 1.41 a | 2.76 a | 3.96 a | 6.53 a | 0.86 a* | 2.13 a | 4.35 a | 6.19 a | 10.29 a | 13.35 a | 1.31 a* | 3.23 a | 6.51 a | 9.05 a | 14.79 a | 19.21 a |
| | 16 | | 1.05 a | 2.47 a | 3.68 a | 6.28 a | 0.32 a* | 1.7 a | 3.97 a | 5.82 a | 9.95 a | 13.01 a | 0.72 a* | 2.78 a | 6.07 a | 8.62 a | 14.37 a | 18.77 a |
| | 24 | | 0.33 a | 1.9 a | 3.13 a | 5.79 a | | 0.83 a | 3.21 a | 5.08 a | 9.26 a | 12.32 a | | 1.88 a | 5.18 a | 7.75 a | 13.54 a | 17.9 a |
| 12 | 12 | | 0.94 a | 2.38 a | 3.6 a | 6.2 a | 0.14 a* | 1.56 a | 3.85 a | 5.7 a | 9.84 a | 12.9 a | 0.53 a* | 2.63 a | 5.92 a | 8.48 a | 14.24 a | 18.64 a |
| | 16 | | 0.42 a | 1.97 a | 3.2 a | 5.85 a | | 0.93 a | 3.3 a | 5.17 a | 9.34 a | 12.4 a | | 1.98 a | 5.29 a | 7.85 a | 13.64 a | 18.01 a |
| | 24 | | | 1.15 b | 2.41 a | 5.13 a | | | 2.21 a | 4.1 a | 8.36 a | 11.42 a | | 0.69 b | 4.02 a | 6.6 a | 12.44 a | 16.75 a |
| 14 | 12 | | 0.38 b | 1.94 a | 3.17 a | 5.82 a | | 0.88 a | 3.26 a | 5.13 a | 9.3 a | 12.36 a | | 1.9 a | 5.11 a | 7.65 a | 13.51 a | 17.96 a |
| | 16 | | | 1.38 b | 2.63 a | 5.33 a | | 0.03 c | 2.51 b | 4.4 a | 8.63 a | 11.69 a | | 1.03 b | 4.27 a | 6.82 a | 12.7 a | 17.1 a |
| | 24 | | | 0.26 d | 1.55 c | 4.36 b | | | 1.02 d | 2.95 c | 7.29 a | 10.35 a | | | 2.58 c | 5.14 b | 11.08 a | 15.39 a |
| 16 | 12 | | | 1.42 c | 2.67 b | 5.37 a | | 0.1 c | 2.57 b | 4.46 a | 8.69 a | 11.75 a | | 1.08 c | 4.18 a | 6.65 a | 12.33 a | 16.68 a |
| | 16 | | | 0.69 d | 1.97 c | 4.73 b | | | 1.6 d | 3.51 c | 7.81 a | 10.87 a | | | 3.12 c | 5.59 b | 11.31 a | 15.59 a |
| | 24 | | | | 0.56 e | 3.46 d | | | | 1.62 d | 6.06 c | 9.12 b | | | 1 d | 3.48 d | 9.26 b | 13.43 a |

See Combined Axial and Lateral Load Table Notes

# 50 psf Lateral Load

| Wall Height (ft) | Spacing (in.) o.c. | 800S250-(mils) | | | | | 800S300-(mils) | | | | 800S350-(mils) | | | |
|---|---|---|---|---|---|---|---|---|---|---|---|---|---|---|
| | | 33 ksi | 50 ksi | | | | 50 ksi | | | | 50 ksi | | | |
| | | 43 | 54 | 68 | 97 | 118 | 54 | 68 | 97 | 118 | 54 | 68 | 97 | 118 |
| 8 | 12 | 4.05 a | 7.33 a | 10.9 a | 18.63 a | 24.46 a | 7.65 a | 11.18 a | 20.38 a | 26.82 a | 10.06 a | 14.85 a | 24.87 a | 33.28 a |
| | 16 | 3.74 a | 7.04 a | 10.59 a | 18.28 a | 24.1 a | 7.34 a | 10.88 a | 20.03 a | 26.45 a | 9.74 a | 14.52 a | 24.5 a | 32.9 a |
| | 24 | 3.11 a | 6.45 a | 9.97 a | 17.6 a | 23.38 a | 6.72 a | 10.27 a | 19.34 a | 25.73 a | 9.1 a | 13.87 a | 23.77 a | 32.13 a |
| 9 | 12 | 3.79 a | 7.07 a | 10.62 a | 18.28 a | 24.04 a | 7.36 a | 10.88 a | 19.96 a | 26.35 a | 9.74 a | 14.49 a | 24.45 a | 32.75 a |
| | 16 | 3.4 a | 6.7 a | 10.23 a | 17.85 a | 23.59 a | 6.98 a | 10.5 a | 19.53 a | 25.89 a | 9.33 a | 14.08 a | 23.99 a | 32.27 a |
| | 24 | 2.61 a | 5.95 a | 9.45 a | 16.99 a | 22.68 a | 6.2 a | 9.73 a | 18.65 a | 24.98 a | 8.52 a | 13.26 a | 23.06 a | 31.31 a |
| 10 | 12 | 3.5 a | 6.77 a | 10.3 a | 17.89 a | 23.55 a | 7.05 a | 10.54 a | 19.49 a | 25.81 a | 9.37 a | 14.1 a | 23.93 a | 32.15 a |
| | 16 | 3.02 a | 6.31 a | 9.82 a | 17.36 a | 22.99 a | 6.57 a | 10.07 a | 18.95 a | 25.25 a | 8.88 a | 13.59 a | 23.36 a | 31.56 a |
| | 24 | 2.05 a | 5.4 a | 8.86 a | 16.3 a | 21.88 a | 5.62 a | 9.13 a | 17.88 a | 24.13 a | 7.88 a | 12.58 a | 22.23 a | 30.38 a |
| 12 | 12 | 2.83 a | 6.07 a | 9.55 a | 16.96 a | 22.35 a | 6.31 a | 9.74 a | 18.34 a | 24.51 a | 8.53 a | 13.16 a | 22.63 a | 30.74 a |
| | 16 | 2.14 a | 5.43 a | 8.87 a | 16.2 a | 21.57 a | 5.63 a | 9.08 a | 17.59 a | 23.73 a | 7.83 a | 12.45 a | 21.83 a | 29.91 a |
| | 24 | 0.76 a | 4.13 a | 7.5 a | 14.7 a | 20 a | 4.28 a | 7.75 a | 16.09 a | 22.15 a | 6.43 a | 11.02 a | 20.24 a | 28.25 a |
| 14 | 12 | 2.05 a | 5.25 a | 8.58 a | 15.66 a | 20.85 a | 5.44 a | 8.79 a | 16.96 a | 22.93 a | 7.55 a | 12.05 a | 21.11 a | 28.81 a |
| | 16 | 1.13 a | 4.39 a | 7.68 a | 14.66 a | 19.81 a | 4.55 a | 7.91 a | 15.97 a | 21.89 a | 6.63 a | 11.11 a | 20.06 a | 27.72 a |
| | 24 | -0.73 c | 2.67 b | 5.87 a | 12.67 a | 17.74 a | 2.76 b | 6.15 a | 13.99 a | 19.81 a | 4.78 a | 9.22 a | 17.96 a | 25.54 a |
| 16 | 12 | 1.18 b | 4.32 a | 7.47 a | 14.12 a | 19.06 a | 4.47 a | 7.72 a | 15.38 a | 21.12 a | 6.47 a | 10.81 a | 19.43 a | 26.47 a |
| | 16 | -0.01 c | 3.23 b | 6.33 a | 12.88 a | 17.76 a | 3.34 b | 6.6 a | 14.14 a | 19.81 a | 5.3 a | 9.62 a | 18.11 a | 25.11 a |
| | 24 | -2.38 e | 1.06 d | 4.06 c | 10.39 b | 15.17 a | 1.08 d | 4.38 c | 11.66 a | 17.21 a | 2.97 c | 7.23 b | 15.46 a | 22.39 a |

See Combined Axial and Lateral Load Table Notes

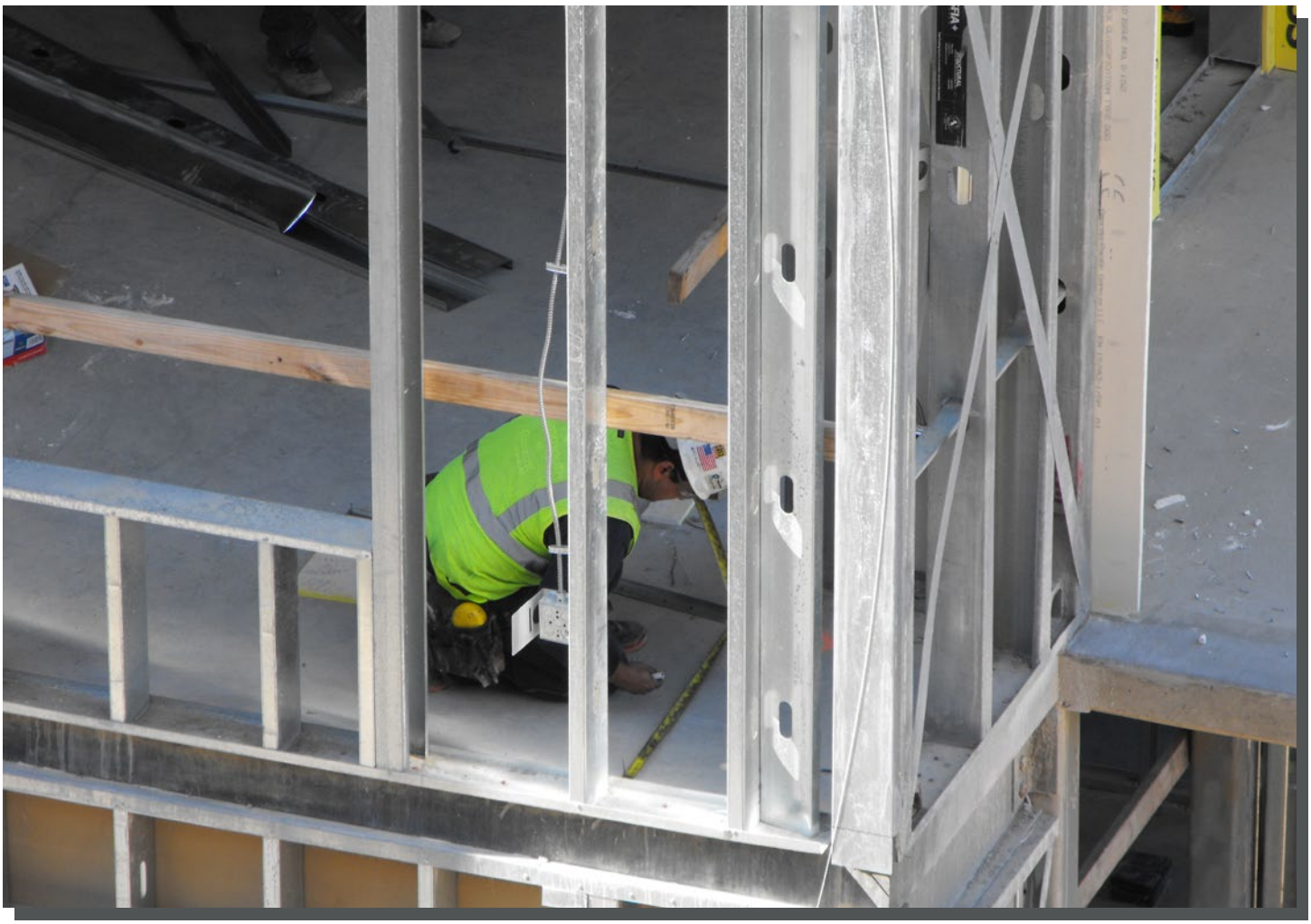

# Floor and Roof Joist Span Tables

## Allowable Floor and Roof Joist Span Table Notes

1. All loads are computed in accordance with AISI S100-16/S2-20, North American Standard for Design of Cold-Formed Steel Structural Members.
2. Total loads are for single span condition and are limited by allowable bending stress or allowable end shear. Live loads are limited by allowable bending stress, allowable end shear, or by deflection on 1/360 of span.
3. Total load values in table are based on maximum allowable stress only. To limit total load deflection to 1/240 of span, multiply live load value shown by 1.5.
4. For two equal continuous spans, the total load shown in these tables will not change. The live load shown may be increased by a factor of 2.4 to maintain the L/360 live load deflection limit, however neither the live load nor total load can exceed the total load shown. Combined bending and shear stresses should be investigated by the designer.
5. Joists must be braced against rotation at all supports.
6. End web crippling check is based on 3.5 inch end bearing. Joist flanges must be fastened to the support.
7. Spans are based on continuous support of compression flange over the full length of the joist.
8. End shear and web crippling capacity have not been reduced for punchouts.
9. "a" indicates that web stiffeners are required at all supports.
10. Allowable flexural strength values in the tables are based on the minimum of local, distortional, and lateral-torsional buckling. Distortional buckling strength is based on a $k\varphi=0$. Higher values may be obtained when sheathing is applied to the joists resulting in a higher $k\varphi$ value.

# Allowable Uniform Load Table (plf) - Simple Span Joists

**BLACK numbers = Total Load; RED numbers = Live Load (See Note 3)**

| Member | Fy (ksi) | Span (ft) | | | | | | | | | | | | | | | | |
|---|---|---|---|---|---|---|---|---|---|---|---|---|---|---|---|---|---|---|
| | | 6'-0'' | 7'-0'' | 8'-0'' | 9'-0'' | 10'-0'' | 11'-0'' | 12'-0'' | 13'-0'' | 14'-0'' | 15'-0'' | 16'-0'' | 17'-0'' | 18'-0'' | 19'-0'' | 20'-0'' | 22'-0'' | 24'-0'' |
| 600S162-33 | 33 | 168 | 124 | 95 | 75 | 61 | 50 | 42 | 36 | 31 | 27 | 24 | 21 | 19 | 17 | 15 | 13 | 11 |
| | | 168 | 124 | 95 | 75 | 61 | 50 | 42 | 36 | 29 | 23 | 19 | 16 | 13 | 11 | 10 | 7 | 6 |
| 600S200-33 | 33 | 193 | 142 | 109 | 86 | 70 | 57 | 48 | 41 | 35 | 31 | 27 | 24 | 21 | 19 | 17 | 14 | 12 |
| | | 193 | 142 | 109 | 86 | 70 | 57 | 48 | 41 | 33 | 27 | 22 | 18 | 15 | 13 | 11 | 8 | 7 |
| 600S162-43 | 33 | 252 | 185 | 142 | 112 | 91 | 75 | 63 | 54 | 46 | 40 | 35 | 31 | 28 | 25 | 23 | 19 | 16 |
| | | 252 | 185 | 142 | 112 | 91 | 75 | 59 | 46 | 37 | 30 | 25 | 21 | 17 | 15 | 13 | 10 | 7 |
| 600S200-43 | 33 | 276 | 203 | 155 | 123 | 99 | 82 | 69 | 59 | 51 | 44 | 39 | 34 | 31 | 27 | 25 | 21 | 17 |
| | | 276 | 203 | 155 | 123 | 99 | 82 | 68 | 53 | 43 | 35 | 29 | 24 | 20 | 17 | 15 | 11 | 8 |
| 600S250-43 | 33 | 291 | 214 | 164 | 129 | 105 | 87 | 73 | 62 | 53 | 47 | 41 | 36 | 32 | 29 | 26 | 22 | 18 |
| | | 291 | 214 | 164 | 129 | 105 | 87 | 73 | 61 | 49 | 40 | 33 | 27 | 23 | 20 | 17 | 13 | 10 |
| 600S162-54 | 50 | 426 | 313 | 240 | 189 | 153 | 127 | 107 | 91 | 78 | 68 | 60 | 53 | 47 | 43 | 38 | 32 | 27 |
| | | 426 | 313 | 240 | 172 | 125 | 94 | 72 | 57 | 46 | 37 | 31 | 25 | 21 | 18 | 16 | 12 | 9 |
| 600S200-54 | 50 | 487 | 358 | 274 | 217 | 175 | 145 | 122 | 104 | 90 | 78 | 69 | 61 | 54 | 49 | 44 | 36 | 30 |
| | | 487 | 358 | 274 | 199 | 145 | 109 | 84 | 66 | 53 | 43 | 35 | 30 | 25 | 21 | 18 | 14 | 10 |
| 600S250-54 | 50 | 513 | 377 | 289 | 228 | 185 | 153 | 128 | 109 | 94 | 82 | 72 | 64 | 57 | 51 | 46 | 38 | 32 |
| | | 513 | 377 | 289 | 226 | 165 | 124 | 95 | 75 | 60 | 49 | 40 | 34 | 28 | 24 | 21 | 15 | 12 |
| 600S162-68 | 50 | 612 | 450 | 344 | 272 | 220 | 182 | 153 | 130 | 112 | 98 | 86 | 76 | 68 | 61 | 55 | 46 | 38 |
| | | 612 | 449 | 301 | 211 | 154 | 116 | 89 | 70 | 56 | 46 | 38 | 31 | 26 | 22 | 19 | 14 | 11 |
| 600S200-68 | 50 | 657 | 483 | 370 | 292 | 237 | 195 | 164 | 140 | 121 | 105 | 92 | 82 | 73 | 66 | 59 | 49 | 41 |
| | | 657 | 483 | 350 | 246 | 179 | 135 | 104 | 82 | 65 | 53 | 44 | 36 | 31 | 26 | 22 | 17 | 13 |
| 600S250-68 | 50 | 697 | 512 | 392 | 310 | 251 | 207 | 174 | 148 | 128 | 111 | 98 | 87 | 77 | 69 | 63 | 52 | 44 |
| | | 697 | 512 | 392 | 283 | 207 | 155 | 120 | 94 | 75 | 61 | 50 | 42 | 35 | 30 | 26 | 19 | 15 |
| 600S162-97 | 50 | 1005 | 738 | 565 | 447 | 362 | 299 | 251 | 214 | 185 | 161 | 141 | 125 | 112 | 100 | 90 | 75 | 63 |
| | | 971 | 612 | 410 | 288 | 210 | 158 | 121 | 95 | 76 | 62 | 51 | 43 | 36 | 31 | 26 | 20 | 15 |
| 600S200-97 | 50 | 1127 | 828 | 634 | 501 | 406 | 335 | 282 | 240 | 207 | 180 | 158 | 140 | 125 | 112 | 101 | 84 | 70 |
| | | 1127 | 715 | 479 | 337 | 245 | 184 | 142 | 112 | 89 | 73 | 60 | 50 | 42 | 36 | 31 | 23 | 18 |
| 600S250-97 | 50 | 1096 | 805 | 616 | 487 | 395 | 326 | 274 | 233 | 201 | 175 | 154 | 137 | 122 | 109 | 99 | 82 | 68 |
| | | 1096 | 805 | 555 | 390 | 284 | 213 | 164 | 129 | 104 | 84 | 69 | 58 | 49 | 41 | 36 | 27 | 21 |
| 600S162-118 | 50 | 1207 a | 933 | 714 | 564 | 457 | 378 | 317 | 271 | 233 | 203 | 179 | 158 | 141 | 127 | 114 | 94 | 79 |
| | | 1145 a | 721 | 483 | 339 | 247 | 186 | 143 | 113 | 90 | 73 | 60 | 50 | 42 | 36 | 31 | 23 | 18 |
| 600S200-118 | 50 | 1207 a | 1035 a | 811 | 641 | 519 | 429 | 361 | 307 | 265 | 231 | 203 | 180 | 160 | 144 | 130 | 107 | 90 |
| | | 1207 a | 847 a | 567 | 398 | 290 | 218 | 168 | 132 | 106 | 86 | 71 | 59 | 50 | 42 | 36 | 27 | 21 |
| 600S250-118 | 50 | 1207 a | 1026 | 785 | 620 | 503 | 415 | 349 | 297 | 256 | 223 | 196 | 174 | 155 | 139 | 126 | 104 | 87 |
| | | 1207 a | 983 | 659 | 463 | 337 | 253 | 195 | 154 | 123 | 100 | 82 | 69 | 58 | 49 | 42 | 32 | 24 |
| 800S162-33[1] | 33 | 126 a | 108 a | 95 a | 84 | 68 | 56 | 47 | 40 | 35 | 30 | 26 | 23 | 21 | 19 | 17 | 14 | 12 |
| | | 126 a | 108 a | 95 a | 84 | 68 | 56 | 47 | 40 | 35 | 30 | 26 | 23 | 21 | 19 | 17 | 14 | 11 |
| 800S200-33[1] | 33 | 126 a | 108 a | 95 a | 84 a | 76 a | 65 | 54 | 46 | 40 | 35 | 31 | 27 | 24 | 22 | 20 | 16 | 14 |
| | | 126 a | 108 a | 95 a | 84 a | 76 a | 65 | 54 | 46 | 40 | 35 | 31 | 27 | 24 | 22 | 20 | 16 | 13 |
| 800S162-43 | 33 | 326 | 240 | 184 | 145 | 117 | 97 | 82 | 70 | 60 | 52 | 46 | 41 | 36 | 33 | 29 | 24 | 20 |
| | | 326 | 240 | 184 | 145 | 117 | 97 | 82 | 70 | 60 | 52 | 46 | 40 | 34 | 29 | 25 | 18 | 14 |
| 800S200-43 | 33 | 350 a | 277 | 212 | 167 | 136 | 112 | 94 | 80 | 69 | 60 | 53 | 47 | 42 | 38 | 34 | 28 | 24 |
| | | 350 a | 277 | 212 | 167 | 136 | 112 | 94 | 80 | 69 | 60 | 53 | 47 | 40 | 34 | 29 | 22 | 17 |
| 800S250-43 | 33 | 350 a | 291 | 223 | 176 | 143 | 118 | 99 | 84 | 73 | 63 | 56 | 49 | 44 | 40 | 36 | 29 | 25 |
| | | 350 a | 291 | 223 | 176 | 143 | 118 | 99 | 84 | 73 | 63 | 56 | 49 | 44 | 38 | 33 | 25 | 19 |
| 800S162-54 | 50 | 580 | 426 | 326 | 258 | 209 | 173 | 145 | 124 | 107 | 93 | 82 | 72 | 64 | 58 | 52 | 43 | 36 |
| | | 580 | 426 | 326 | 258 | 209 | 173 | 142 | 112 | 89 | 73 | 60 | 50 | 42 | 36 | 31 | 23 | 18 |
| 800S200-54 | 50 | 667 | 490 | 375 | 296 | 240 | 198 | 167 | 142 | 122 | 107 | 94 | 83 | 74 | 67 | 60 | 50 | 42 |
| | | 667 | 490 | 375 | 296 | 240 | 198 | 166 | 131 | 105 | 85 | 70 | 58 | 49 | 42 | 36 | 27 | 21 |
| 800S250-54 | 50 | 697 a | 515 | 394 | 311 | 252 | 208 | 175 | 149 | 129 | 112 | 99 | 87 | 78 | 70 | 63 | 52 | 44 |
| | | 697 a | 515 | 394 | 311 | 252 | 208 | 175 | 147 | 118 | 96 | 79 | 66 | 55 | 47 | 40 | 30 | 23 |
| 800S162-68 | 50 | 794 | 584 | 447 | 353 | 286 | 236 | 199 | 169 | 146 | 127 | 112 | 99 | 88 | 79 | 71 | 59 | 50 |
| | | 794 | 584 | 447 | 353 | 286 | 232 | 179 | 141 | 113 | 92 | 75 | 63 | 53 | 45 | 39 | 29 | 22 |
| 800S200-68 | 50 | 910 | 668 | 512 | 404 | 328 | 271 | 227 | 194 | 167 | 146 | 128 | 113 | 101 | 91 | 82 | 68 | 57 |
| | | 910 | 668 | 512 | 404 | 328 | 267 | 206 | 162 | 130 | 105 | 87 | 72 | 61 | 52 | 44 | 33 | 26 |
| 800S250-68 | 50 | 960 | 705 | 540 | 427 | 346 | 286 | 240 | 205 | 176 | 154 | 135 | 120 | 107 | 96 | 86 | 71 | 60 |
| | | 960 | 705 | 540 | 427 | 346 | 286 | 234 | 184 | 147 | 120 | 99 | 82 | 69 | 59 | 51 | 38 | 29 |

See Allowable Floor Joist Span Table Notes

# Allowable Uniform Load Table (plf) - Simple Span Joists

**BLACK numbers = Total Load; RED numbers = Live Load (See Note 3)**

| Member | Fy (ksi) | Span (ft) | | | | | | | | | | | | | | | | |
|---|---|---|---|---|---|---|---|---|---|---|---|---|---|---|---|---|---|---|
| | | 6'-0'' | 7'-0'' | 8'-0'' | 9'-0'' | 10'-0'' | 11'-0'' | 12'-0'' | 13'-0'' | 14'-0'' | 15'-0'' | 16'-0'' | 17'-0'' | 18'-0'' | 19'-0'' | 20'-0'' | 22'-0'' | 24'-0'' |
| 800S162-97 | 50 | 1385 | 1017 | 779 | 615 | 498 | 412 | 346 | 295 | 254 | 222 | 195 | 172 | 154 | 138 | 125 | 103 | 87 |
| | | 1385 | 1017 | 779 | 583 | 425 | 319 | 246 | 193 | 155 | 126 | 104 | 86 | 73 | 62 | 53 | 40 | 31 |
| 800S200-97 | 50 | 1589 | 1168 | 894 | 706 | 572 | 473 | 397 | 339 | 292 | 254 | 224 | 198 | 177 | 159 | 143 | 118 | 99 |
| | | 1589 | 1168 | 894 | 672 | 490 | 368 | 283 | 223 | 178 | 145 | 120 | 100 | 84 | 71 | 61 | 46 | 35 |
| 800S250-97 | 50 | 1537 | 1129 | 865 | 683 | 553 | 457 | 384 | 327 | 282 | 246 | 216 | 192 | 171 | 153 | 138 | 114 | 96 |
| | | 1537 | 1129 | 865 | 683 | 553 | 420 | 324 | 254 | 204 | 166 | 136 | 114 | 96 | 82 | 70 | 53 | 40 |
| 800S162-118 | 50 | 1868 | 1372 | 1051 | 830 | 672 | 556 | 467 | 398 | 343 | 299 | 263 | 233 | 208 | 186 | 168 | 139 | 117 |
| | | 1868 | 1372 | 983 | 690 | 503 | 378 | 291 | 229 | 183 | 149 | 123 | 102 | 86 | 73 | 63 | 47 | 36 |
| 800S200-118 | 50 | 2080 | 1528 | 1170 | 925 | 749 | 619 | 520 | 443 | 382 | 333 | 293 | 259 | 231 | 207 | 187 | 155 | 130 |
| | | 2080 | 1528 | 1137 | 799 | 582 | 437 | 337 | 265 | 212 | 173 | 142 | 119 | 100 | 85 | 73 | 55 | 42 |
| 800S250-118 | 50 | 1982 | 1456 | 1115 | 881 | 714 | 590 | 496 | 422 | 364 | 317 | 279 | 247 | 220 | 198 | 178 | 147 | 124 |
| | | 1982 | 1456 | 1115 | 881 | 666 | 501 | 386 | 303 | 243 | 197 | 163 | 136 | 114 | 97 | 83 | 63 | 48 |

See Allowable Floor Joist Span Table Notes



# Allowable Uniform Load Table (plf) - Simple Span Joists

**BLACK numbers = Total Load; RED numbers = Live Load (See Note 3)**

| Member | Fy (ksi) | Span (ft) | | | | | | | | | | | | | | | | |
|---|---|---|---|---|---|---|---|---|---|---|---|---|---|---|---|---|---|---|
| | | 11'-0'' | 12'-0'' | 13'-0'' | 14'-0'' | 15'-0'' | 16'-0'' | 17'-0'' | 18'-0'' | 19'-0'' | 20'-0'' | 22'-0'' | 24'-0'' | 26'-0'' | 28'-0'' | 30'-0'' | 32'-0'' | 34'-0'' |
| 1000S162-43[1] | 33 | 100 | 84 | 71 | 62 | 54 | 47 | 42 | 37 | 33 | 30 | 25 | 21 | 18 | 15 | 13 | 12 | 10 |
| | | 100 | 84 | 71 | 62 | 54 | 47 | 42 | 37 | 33 | 30 | 25 | 21 | 18 | 15 | 12 | 10 | 8 |
| 1000S200-43[1] | 33 | 117 | 98 | 84 | 72 | 63 | 55 | 49 | 44 | 39 | 35 | 29 | 25 | 21 | 18 | 16 | 14 | 12 |
| | | 117 | 98 | 84 | 72 | 63 | 55 | 49 | 44 | 39 | 35 | 29 | 25 | 21 | 17 | 14 | 11 | 10 |
| 1000S250-43[1] | 33 | 122 a | 104 | 88 | 76 | 66 | 58 | 52 | 46 | 41 | 37 | 31 | 26 | 22 | 19 | 17 | 15 | 13 |
| | | 122 a | 104 | 88 | 76 | 66 | 58 | 52 | 46 | 41 | 37 | 31 | 26 | 22 | 19 | 17 | 14 | 11 |
| 1000S162-54 | 50 | 213 | 179 | 153 | 132 | 115 | 101 | 89 | 80 | 71 | 64 | 53 | 45 | 38 | 33 | 29 | 25 | 22 |
| | | 213 | 179 | 153 | 132 | 115 | 100 | 84 | 71 | 60 | 51 | 39 | 30 | 23 | 19 | 15 | 13 | 10 |
| 1000S200-54 | 50 | 248 | 209 | 178 | 153 | 134 | 117 | 104 | 93 | 83 | 75 | 62 | 52 | 44 | 38 | 33 | 29 | 26 |
| | | 248 | 209 | 178 | 153 | 134 | 115 | 96 | 81 | 69 | 59 | 44 | 34 | 27 | 21 | 17 | 14 | 12 |
| 1000S250-54 | 50 | 263 | 221 | 188 | 162 | 141 | 124 | 110 | 98 | 88 | 79 | 66 | 55 | 47 | 41 | 35 | 31 | 27 |
| | | 263 | 221 | 188 | 162 | 141 | 124 | 110 | 95 | 81 | 69 | 52 | 40 | 32 | 25 | 21 | 17 | 14 |
| 1000S162-68 | 50 | 296 | 249 | 212 | 183 | 159 | 140 | 124 | 111 | 99 | 90 | 74 | 62 | 53 | 46 | 40 | 35 | 31 |
| | | 296 | 249 | 212 | 183 | 155 | 128 | 107 | 90 | 76 | 65 | 49 | 38 | 30 | 24 | 19 | 16 | 13 |
| 1000S200-68 | 50 | 342 | 288 | 245 | 211 | 184 | 162 | 143 | 128 | 115 | 104 | 86 | 72 | 61 | 53 | 46 | 40 | 36 |
| | | 342 | 288 | 245 | 211 | 177 | 146 | 122 | 102 | 87 | 75 | 56 | 43 | 34 | 27 | 22 | 18 | 15 |
| 1000S250-68 | 50 | 363 | 305 | 260 | 224 | 195 | 172 | 152 | 136 | 122 | 110 | 91 | 76 | 65 | 56 | 49 | 43 | 38 |
| | | 363 | 305 | 260 | 224 | 195 | 168 | 140 | 118 | 100 | 86 | 65 | 50 | 39 | 31 | 25 | 21 | 18 |
| 1000S162-97 | 50 | 483 | 406 | 346 | 298 | 260 | 228 | 202 | 180 | 162 | 146 | 121 | 102 | 86 | 75 | 65 | 57 | 51 |
| | | 483 | 406 | 338 | 270 | 220 | 181 | 151 | 127 | 108 | 93 | 70 | 54 | 42 | 34 | 27 | 23 | 19 |
| 1000S200-97 | 50 | 554 | 465 | 396 | 342 | 298 | 262 | 232 | 207 | 186 | 167 | 138 | 116 | 99 | 85 | 74 | 65 | 58 |
| | | 554 | 465 | 385 | 308 | 250 | 206 | 172 | 145 | 123 | 106 | 79 | 61 | 48 | 39 | 31 | 26 | 22 |
| 1000S250-97 | 50 | 590 | 496 | 423 | 364 | 317 | 279 | 247 | 220 | 198 | 179 | 148 | 124 | 106 | 91 | 79 | 70 | 62 |
| | | 590 | 496 | 423 | 348 | 283 | 233 | 194 | 164 | 139 | 119 | 90 | 69 | 54 | 43 | 35 | 29 | 24 |
| 1000S162-118 | 50 | 664 | 558 | 476 | 410 | 357 | 314 | 278 | 248 | 223 | 201 | 166 | 140 | 119 | 103 | 89 | 78 | 70 |
| | | 663 | 510 | 401 | 321 | 261 | 215 | 179 | 151 | 129 | 110 | 83 | 64 | 50 | 40 | 33 | 27 | 22 |
| 1000S200-118 | 50 | 759 | 638 | 543 | 469 | 408 | 359 | 318 | 283 | 254 | 230 | 190 | 159 | 136 | 117 | 102 | 90 | 79 |
| | | 757 | 583 | 459 | 367 | 299 | 246 | 205 | 173 | 147 | 126 | 95 | 73 | 57 | 46 | 37 | 31 | 26 |
| 1000S250-118 | 50 | 769 | 646 | 551 | 475 | 414 | 364 | 322 | 287 | 258 | 233 | 192 | 162 | 138 | 119 | 103 | 91 | 81 |
| | | 769 | 646 | 519 | 416 | 338 | 278 | 232 | 195 | 166 | 143 | 107 | 82 | 65 | 52 | 42 | 35 | 29 |
| 1200S162-54[1] | 50 | 200 a | 174 | 148 | 128 | 111 | 98 | 87 | 77 | 69 | 63 | 52 | 43 | 37 | 32 | 28 | 24 | 22 |
| | | 200 a | 174 | 148 | 128 | 111 | 98 | 87 | 77 | 69 | 63 | 52 | 43 | 36 | 29 | 23 | 19 | 16 |
| 1200S200-54[1] | 50 | 200 a | 184 a | 170 a | 151 | 131 | 115 | 102 | 91 | 82 | 74 | 61 | 51 | 44 | 38 | 33 | 29 | 26 |
| | | 200 a | 184 a | 170 a | 151 | 131 | 115 | 102 | 91 | 82 | 74 | 61 | 51 | 41 | 33 | 26 | 22 | 18 |
| 1200S250-54[1] | 50 | 200 a | 184 a | 170 a | 157 a | 140 | 123 | 109 | 97 | 87 | 79 | 65 | 55 | 47 | 40 | 35 | 31 | 27 |
| | | 200 a | 184 a | 170 a | 157 a | 140 | 123 | 109 | 97 | 87 | 79 | 65 | 55 | 46 | 37 | 30 | 25 | 21 |
| 1200S162-68 | 50 | 348 | 293 | 249 | 215 | 187 | 165 | 146 | 130 | 117 | 105 | 87 | 73 | 62 | 54 | 47 | 41 | 36 |
| | | 348 | 293 | 249 | 215 | 187 | 165 | 146 | 130 | 117 | 101 | 76 | 58 | 46 | 37 | 30 | 25 | 20 |
| 1200S200-68 | 50 | 407 | 342 | 292 | 251 | 219 | 193 | 171 | 152 | 137 | 123 | 102 | 86 | 73 | 63 | 55 | 48 | 43 |
| | | 407 | 342 | 292 | 251 | 219 | 193 | 171 | 152 | 133 | 114 | 86 | 66 | 52 | 42 | 34 | 28 | 23 |
| 1200S250-68 | 50 | 436 | 366 | 312 | 269 | 234 | 206 | 182 | 163 | 146 | 132 | 109 | 91 | 78 | 67 | 59 | 51 | 46 |
| | | 436 | 366 | 312 | 269 | 234 | 206 | 182 | 163 | 146 | 129 | 97 | 75 | 59 | 47 | 38 | 31 | 26 |
| 1200S162-97 | 50 | 581 | 488 | 416 | 358 | 312 | 274 | 243 | 217 | 195 | 176 | 145 | 122 | 104 | 90 | 78 | 69 | 61 |
| | | 581 | 488 | 416 | 358 | 312 | 274 | 238 | 200 | 170 | 146 | 110 | 85 | 67 | 53 | 43 | 36 | 30 |
| 1200S200-97 | 50 | 671 | 564 | 481 | 414 | 361 | 317 | 281 | 251 | 225 | 203 | 168 | 141 | 120 | 104 | 90 | 79 | 70 |
| | | 671 | 564 | 481 | 414 | 361 | 317 | 269 | 226 | 192 | 165 | 124 | 95 | 75 | 60 | 49 | 40 | 34 |
| 1200S250-97 | 50 | 719 | 604 | 515 | 444 | 387 | 340 | 301 | 269 | 241 | 218 | 180 | 151 | 129 | 111 | 97 | 85 | 75 |
| | | 719 | 604 | 515 | 444 | 387 | 340 | 301 | 254 | 216 | 185 | 139 | 107 | 84 | 67 | 55 | 45 | 38 |

See Allowable Floor Joist Span Table Notes

# Allowable Uniform Load Table (plf) - Simple Span Joists

**BLACK numbers = Total Load; RED numbers = Live Load (See Note 3)**

| Member | Fy (ksi) | Span (ft) | | | | | | | | | | | | | | | | | |
|---|---|---|---|---|---|---|---|---|---|---|---|---|---|---|---|---|---|---|---|
| | | 11'-0'' | 12'-0'' | 13'-0'' | 14'-0'' | 15'-0'' | 16'-0'' | 17'-0'' | 18'-0'' | 19'-0'' | 20'-0'' | 22'-0'' | 24'-0'' | 26'-0'' | 28'-0'' | 30'-0'' | 32'-0'' | 34'-0'' |
| 1200S162-118 | 50 | 765 | 643 | 548 | 472 | 411 | 362 | 320 | 286 | 256 | 231 | 191 | 161 | 137 | 118 | 103 | 90 | 80 |
| | | 765 | 643 | 548 | 472 | 411 | 343 | 286 | 241 | 205 | 176 | 132 | 102 | 80 | 64 | 52 | 43 | 36 |
| 1200S200-118 | 50 | 881 | 740 | 631 | 544 | 474 | 416 | 369 | 329 | 295 | 266 | 220 | 185 | 158 | 136 | 118 | 104 | 92 |
| | | 881 | 740 | 631 | 544 | 471 | 388 | 323 | 272 | 232 | 199 | 149 | 115 | 90 | 72 | 59 | 48 | 40 |
| 1200S250-118 | 50 | 947 | 796 | 678 | 585 | 509 | 448 | 396 | 354 | 317 | 286 | 237 | 199 | 169 | 146 | 127 | 112 | 99 |
| | | 947 | 796 | 678 | 585 | 509 | 435 | 362 | 305 | 260 | 223 | 167 | 129 | 101 | 81 | 66 | 54 | 45 |
| 1200S300-118 | 50 | 993 | 834 | 711 | 613 | 534 | 469 | 416 | 371 | 333 | 300 | 248 | 209 | 178 | 153 | 134 | 117 | 104 |
| | | 993 | 834 | 711 | 613 | 534 | 469 | 401 | 338 | 287 | 246 | 185 | 143 | 112 | 90 | 73 | 60 | 50 |
| 1200S350-118 | 50 | 1197 | 1006 | 857 | 739 | 644 | 566 | 501 | 447 | 401 | 362 | 299 | 252 | 214 | 185 | 161 | 141 | 125 |
| | | 1197 | 1006 | 857 | 739 | 644 | 555 | 463 | 390 | 331 | 284 | 213 | 164 | 129 | 104 | 84 | 69 | 58 |
| 1400S200-54[1] | 50 | 171 a | 157 a | 145 a | 134 a | 125 a | 118 a | 111 a | 103 | 92 | 83 | 69 | 58 | 49 | 43 | 37 | 33 | 29 |
| | | 171 a | 157 a | 145 a | 134 a | 125 a | 118 a | 111 a | 103 | 92 | 83 | 69 | 58 | 49 | 43 | 37 | 31 | 26 |
| 1400S250-54[1] | 50 | 171 a | 157 a | 145 a | 134 a | 125 a | 118 a | 111 a | 105 a | 99 a | 90 | 74 | 63 | 53 | 46 | 40 | 35 | 31 |
| | | 171 a | 157 a | 145 a | 134 a | 125 a | 118 a | 111 a | 105 a | 99 a | 90 | 74 | 63 | 53 | 46 | 40 | 35 | 29 |
| 1400S300-54[1] | 50 | 171 a | 157 a | 145 a | 134 a | 125 a | 118 a | 111 a | 105 a | 99 a | 94 a | 78 | 65 | 56 | 48 | 42 | 37 | 33 |
| | | 171 a | 157 a | 145 a | 134 a | 125 a | 118 a | 111 a | 105 a | 99 a | 94 a | 78 | 65 | 56 | 48 | 42 | 36 | 30 |
| 1400S200-68 | 50 | 430 a | 390 | 332 | 287 | 250 | 219 | 194 | 173 | 156 | 140 | 116 | 98 | 83 | 72 | 62 | 55 | 49 |
| | | 430 a | 390 | 332 | 287 | 250 | 219 | 194 | 173 | 156 | 140 | 116 | 94 | 74 | 59 | 48 | 40 | 33 |
| 1400S250-68 | 50 | 430 a | 394 a | 359 | 310 | 270 | 237 | 210 | 187 | 168 | 152 | 125 | 105 | 90 | 77 | 67 | 59 | 53 |
| | | 430 a | 394 a | 359 | 310 | 270 | 237 | 210 | 187 | 168 | 152 | 125 | 105 | 84 | 67 | 54 | 45 | 37 |
| 1400S300-68 | 50 | 430 a | 394 a | 364 a | 325 | 283 | 249 | 220 | 196 | 176 | 159 | 131 | 110 | 94 | 81 | 71 | 62 | 55 |
| | | 430 a | 394 a | 364 a | 325 | 283 | 249 | 220 | 196 | 176 | 159 | 131 | 110 | 91 | 73 | 59 | 49 | 41 |
| 1400S200-97 | 50 | 778 | 654 | 557 | 480 | 419 | 368 | 326 | 291 | 261 | 235 | 195 | 163 | 139 | 120 | 105 | 92 | 81 |
| | | 778 | 654 | 557 | 480 | 419 | 368 | 326 | 291 | 261 | 235 | 179 | 138 | 109 | 87 | 71 | 58 | 49 |
| 1400S250-97 | 50 | 840 | 706 | 602 | 519 | 452 | 397 | 352 | 314 | 282 | 254 | 210 | 177 | 150 | 130 | 113 | 99 | 88 |
| | | 840 | 706 | 602 | 519 | 452 | 397 | 352 | 314 | 282 | 254 | 200 | 154 | 121 | 97 | 79 | 65 | 54 |
| 1400S300-97 | 50 | 883 | 742 | 632 | 545 | 475 | 417 | 370 | 330 | 296 | 267 | 221 | 185 | 158 | 136 | 119 | 104 | 92 |
| | | 883 | 742 | 632 | 545 | 475 | 417 | 370 | 330 | 296 | 267 | 219 | 169 | 133 | 106 | 86 | 71 | 59 |
| 1400S200-118 | 50 | 1032 | 867 | 739 | 637 | 555 | 488 | 432 | 385 | 346 | 312 | 258 | 217 | 185 | 159 | 139 | 122 | 108 |
| | | 1032 | 867 | 739 | 637 | 555 | 488 | 432 | 385 | 341 | 293 | 220 | 169 | 133 | 107 | 87 | 71 | 60 |
| 1400S250-118 | 50 | 1116 | 938 | 799 | 689 | 600 | 528 | 467 | 417 | 374 | 338 | 279 | 235 | 200 | 172 | 150 | 132 | 117 |
| | | 1116 | 938 | 799 | 689 | 600 | 528 | 467 | 417 | 374 | 325 | 244 | 188 | 148 | 119 | 96 | 79 | 66 |
| 1400S300-118 | 50 | 1175 | 988 | 842 | 726 | 632 | 556 | 492 | 439 | 394 | 356 | 294 | 247 | 210 | 181 | 158 | 139 | 123 |
| | | 1175 | 988 | 842 | 726 | 632 | 556 | 492 | 439 | 394 | 356 | 269 | 207 | 163 | 131 | 106 | 87 | 73 |
| 1600S200-68[1] | 50 | 300 a | 275 a | 254 a | 236 a | 220 a | 203 | 180 | 160 | 144 | 130 | 107 | 90 | 77 | 66 | 58 | 51 | 45 |
| | | 300 a | 275 a | 254 a | 236 a | 220 a | 203 | 180 | 160 | 144 | 130 | 107 | 90 | 77 | 66 | 58 | 51 | 45 |
| 1600S250-68[1] | 50 | 300 a | 275 a | 254 a | 236 a | 220 a | 206 a | 194 a | 175 | 157 | 142 | 117 | 98 | 84 | 72 | 63 | 55 | 49 |
| | | 300 a | 275 a | 254 a | 236 a | 220 a | 206 a | 194 a | 175 | 157 | 142 | 117 | 98 | 84 | 72 | 63 | 55 | 49 |
| 1600S300-68[1] | 50 | 300 a | 275 a | 254 a | 236 a | 220 a | 206 a | 194 a | 183 a | 166 | 150 | 124 | 104 | 88 | 76 | 66 | 58 | 52 |
| | | 300 a | 275 a | 254 a | 236 a | 220 a | 206 a | 194 a | 183 a | 166 | 150 | 124 | 104 | 88 | 76 | 66 | 58 | 52 |
| 1600S350-68[1] | 50 | 300 a | 275 a | 254 a | 236 a | 220 a | 206 a | 194 a | 183 a | 174 a | 165 a | 150 a | 130 | 111 | 96 | 83 | 73 | 65 |
| | | 300 a | 275 a | 254 a | 236 a | 220 a | 206 a | 194 a | 183 a | 174 a | 165 a | 150 a | 130 | 111 | 96 | 83 | 73 | 64 |
| 1600S200-97 | 50 | 874 | 734 | 626 | 539 | 470 | 413 | 366 | 326 | 293 | 264 | 218 | 184 | 156 | 135 | 117 | 103 | 91 |
| | | 874 | 734 | 626 | 539 | 470 | 413 | 366 | 326 | 293 | 264 | 218 | 184 | 149 | 119 | 97 | 80 | 67 |
| 1600S250-97 | 50 | 951 | 799 | 681 | 587 | 511 | 450 | 398 | 355 | 319 | 288 | 238 | 200 | 170 | 147 | 128 | 112 | 100 |
| | | 951 | 799 | 681 | 587 | 511 | 450 | 398 | 355 | 319 | 288 | 238 | 200 | 166 | 133 | 108 | 89 | 74 |
| 1600S300-97 | 50 | 1006 | 845 | 720 | 621 | 541 | 475 | 421 | 376 | 337 | 304 | 251 | 211 | 180 | 155 | 135 | 119 | 105 |
| | | 1006 | 845 | 720 | 621 | 541 | 475 | 421 | 376 | 337 | 304 | 251 | 211 | 180 | 145 | 118 | 97 | 81 |
| 1600S350-97 | 50 | 1099 a | 1007 a | 883 | 761 | 663 | 583 | 516 | 461 | 413 | 373 | 308 | 259 | 221 | 190 | 166 | 146 | 129 |
| | | 1099 a | 1007 a | 883 | 761 | 663 | 583 | 516 | 461 | 413 | 373 | 308 | 259 | 208 | 167 | 136 | 112 | 93 |

See Allowable Floor Joist Span Table Notes

# Allowable Uniform Load Table (plf) - Simple Span Joists

**BLACK numbers = Total Load; RED numbers = Live Load (See Note 3)**

| Member | Fy (ksi) | Span (ft) | | | | | | | | | | | | | | | | |
|---|---|---|---|---|---|---|---|---|---|---|---|---|---|---|---|---|---|---|
| | | 11'-0'' | 12'-0'' | 13'-0'' | 14'-0'' | 15'-0'' | 16'-0'' | 17'-0'' | 18'-0'' | 19'-0'' | 20'-0'' | 22'-0'' | 24'-0'' | 26'-0'' | 28'-0'' | 30'-0'' | 32'-0'' | 34'-0'' |
| 1600S200-118 | 50 | 1170 | 983 | 837 | 722 | 629 | 553 | 490 | 437 | 392 | 354 | 292 | 246 | 209 | 181 | 157 | 138 | 122 |
| | | 1170 | 983 | 837 | 722 | 629 | 553 | 490 | 437 | 392 | 354 | 292 | 234 | 184 | 148 | 120 | 99 | 82 |
| 1600S250-118 | 50 | 1274 | 1071 | 912 | 787 | 685 | 602 | 533 | 476 | 427 | 385 | 319 | 268 | 228 | 197 | 171 | 151 | 133 |
| | | 1274 | 1071 | 912 | 787 | 685 | 602 | 533 | 476 | 427 | 385 | 319 | 259 | 204 | 163 | 133 | 109 | 91 |
| 1600S300-118 | 50 | 1349 | 1134 | 966 | 833 | 726 | 638 | 565 | 504 | 452 | 408 | 337 | 283 | 241 | 208 | 181 | 159 | 141 |
| | | 1349 | 1134 | 966 | 833 | 726 | 638 | 565 | 504 | 452 | 408 | 337 | 283 | 224 | 179 | 146 | 120 | 100 |
| 1600S350-118 | 50 | 1633 | 1372 | 1169 | 1008 | 878 | 772 | 684 | 610 | 547 | 494 | 408 | 343 | 292 | 252 | 220 | 193 | 171 |
| | | 1633 | 1372 | 1169 | 1008 | 878 | 772 | 684 | 610 | 547 | 494 | 408 | 324 | 255 | 204 | 166 | 137 | 114 |

See Allowable Floor Joist Span Table Notes



# Header Load Tables

## Header Load Table Notes

1. Calculated properties are based on AISI S100-16/S2-20, North American Standard for Design of Cold-Formed Steel Structural Members.
2. Allowable deflection limit is L/360.
3. Allowable capacities have not been modified for wind or earthquake loading.
4. Headers are made from two "boxed" or back-to-back members.
5. Allowable moment, shear, and web crippling capacities are based on twice the capacity of a single member. The moment of inertia is based on twice the value of the single member.
6. Minimum bearing length for web crippling = 1-inch.
7. Capacities are calculated for unpunched members only.
8. Members are assumed adequately braced for bending.
9. Allowable loads are for simply supported headers with unitform bending loads only.
10. "e" web stiffeners are required at each support.

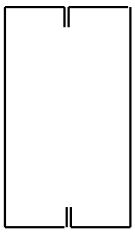

Boxed Header

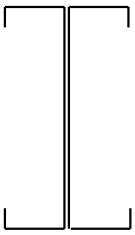

Back-to-Back “I” Header

# Header Allowable Uniform Loads (lb/ft)

| Section | Yield, Fy, ksi | Span | | | | | | |
|---|---|---|---|---|---|---|---|---|
| | | 3 (ft) | 4 (ft) | 5 (ft) | 6 (ft) | 8 (ft) | 10 (ft) | 12 (ft) |
| 550S162-33 | 33 | 931 e | 698 e | 535 e | 371 e | 209 e | 127 e | 74 e |
| 550S162-43 | 33 | 2066 e | 1203 e | 770 e | 535 e | 301 e | 165 e | 95 e |
| 550S162-54 | 33 | 2761 e | 1553 e | 994 e | 690 e | 388 e | 203 e | 118 |
| 550S162-54 | 50 | 3617 e | 2034 e | 1302 e | 904 e | 397 e | 203 e | 118 |
| 550S162-68 | 50 | 5032 e | 2831 e | 1812 e | 1158 e | 489 e | 250 e | 145 |
| 600S137-33 | 33 | 850 e | 638 e | 465 e | 323 e | 182 e | 116 e | 78 e |
| 600S162-33 | 33 | 851 e | 638 e | 510 e | 420 e | 236 e | 151 e | 91 e |
| 600S200-33 | 33 | 851 e | 638 e | 510 e | 425 e | 251 e | 161 e | 104 e |
| 600S137-43 | 33 | 1860 e | 1046 e | 670 e | 465 e | 262 e | 167 e | 103 e |
| 600S162-43 | 33 | 1887 e | 1357 e | 869 e | 603 e | 339 e | 202 e | 117 e |
| 600S200-43 | 33 | 1887 e | 1415 e | 915 e | 636 e | 358 e | 229 e | 136 e |
| 600S250-43 | 33 | 1887 e | 1415 e | 958 e | 665 e | 374 e | 240 e | 156 e |
| 600S137-54 | 33 | 2419 e | 1361 e | 871 e | 605 e | 340 e | 218 e | 127 |
| 600S137-54 | 50 | 3393 e | 1909 e | 1222 e | 848 e | 430 e | 220 e | 127 |
| 600S162-54 | 33 | 3119 e | 1754 e | 1123 e | 780 e | 439 e | 250 e | 145 e |
| 600S162-54 | 50 | 3763 e | 2299 e | 1472 e | 1022 e | 488 e | 250 e | 145 e |
| 600S200-54 | 33 | 3550 e | 1997 e | 1278 e | 887 e | 499 e | 290 e | 168 e |
| 600S200-54 | 50 | 3763 e | 2514 e | 1609 e | 1117 e | 567 e | 290 e | 168 e |
| 600S250-54 | 33 | 3364 e | 1892 e | 1211 e | 841 e | 473 e | 303 e | 193 e |
| 600S250-54 | 50 | 3763 e | 2630 e | 1683 e | 1169 e | 644 e | 330 e | 191 e |
| 600S137-68 | 50 | 4540 e | 2554 e | 1635 e | 1135 e | 528 e | 271 e | 157 |
| 600S162-68 | 50 | 5685 e | 3198 e | 2046 e | 1421 e | 602 e | 308 e | 178 |
| 600S200-68 | 50 | 5906 e | 3322 e | 2126 e | 1476 e | 700 e | 358 e | 207 e |
| 600S250-68 | 50 | 6089 e | 3425 e | 2192 e | 1522 e | 807 e | 413 e | 239 e |
| 600S137-97 | 50 | 7480 e | 4208 e | 2693 e | 1696 e | 715 | 366 | 212 |
| 600S162-97 | 50 | 8358 e | 4702 e | 3009 e | 1942 e | 819 | 420 | 243 |
| 600S200-97 | 50 | 9517 e | 5353 e | 3426 e | 2272 e | 959 e | 491 | 284 |
| 600S250-97 | 50 | 9174 e | 5160 e | 3303 e | 2293 e | 1110 e | 568 | 329 |
| 600S162-118 | 50 | 10159 e | 5715 e | 3657 e | 2289 e | 966 | 495 | 286 |
| 600S200-118 | 50 | 11568 e | 6507 e | 4165 e | 2690 e | 1135 | 581 | 336 |
| 600S250-118 | 50 | 11321 e | 6368 e | 4076 e | 2830 e | 1318 e | 675 | 390 |
| 800S137-33[1] | 33 | 632 e | 474 e | 379 e | 316 e | 208 e | 133 e | 93 e |
| 800S162-33[1] | 33 | 632 e | 474 e | 379 e | 316 e | 237 e | 153 e | 106 e |
| 800S200-33[1] | 33 | 632 e | 474 e | 379 e | 316 e | 237 e | 174 e | 121 e |
| 800S137-43 | 33 | 1401 e | 1051 e | 841 e | 641 e | 361 e | 231 e | 160 e |
| 800S162-43 | 33 | 1401 e | 1051 e | 841 e | 701 e | 412 e | 264 e | 183 e |
| 800S200-43 | 33 | 1401 e | 1051 e | 841 e | 701 e | 526 e | 339 e | 236 e |
| 800S250-43 | 33 | 1401 e | 1051 e | 841 e | 701 e | 526 e | 341 e | 237 e |
| 800S137-54 | 33 | 2788 e | 1916 e | 1226 e | 852 e | 479 e | 307 e | 213 e |
| 800S137-54 | 50 | 2788 e | 2091 e | 1673 e | 1173 e | 660 e | 422 e | 252 e |
| 800S162-54 | 33 | 2788 e | 2091 e | 1391 e | 966 e | 543 e | 348 e | 241 e |
| 800S162-54 | 50 | 2788 e | 2091 e | 1673 e | 1336 e | 752 e | 481 e | 284 e |
| 800S200-54 | 33 | 2788 e | 2091 e | 1673 e | 1321 e | 743 e | 476 e | 330 e |
| 800S200-54 | 50 | 2788 e | 2091 e | 1673 e | 1394 e | 925 e | 575 e | 332 e |
| 800S250-54 | 33 | 2788 e | 2091 e | 1673 e | 1246 e | 701 e | 449 e | 312 e |
| 800S250-54 | 50 | 2788 e | 2091 e | 1673 e | 1394 e | 929 e | 595 e | 374 e |
| 800S137-68 | 50 | 5627 e | 3621 e | 2318 e | 1610 e | 905 e | 550 e | 318 e |
| 800S162-68 | 50 | 5627 e | 4110 e | 2631 e | 1827 e | 1028 e | 618 e | 358 e |
| 800S200-68 | 50 | 5627 e | 4220 e | 3176 e | 2205 e | 1240 e | 712 e | 412 e |
| 800S250-68 | 50 | 5627 e | 4220 e | 3268 e | 2270 e | 1277 e | 809 e | 468 e |
| 800S137-97 | 50 | 10850 e | 6103 e | 3906 e | 2712 e | 1468 e | 752 e | 435 |
| 800S162-97 | 50 | 12255 e | 6894 e | 4412 e | 3064 e | 1659 e | 849 e | 491 |
| 800S200-97 | 50 | 14283 e | 8034 e | 5142 e | 3571 e | 1913 e | 980 e | 567 |
| 800S250-97 | 50 | 13603 e | 7652 e | 4897 e | 3401 e | 1913 e | 1118 e | 647 e |
| 800S162-118 | 50 | 15551 e | 8748 e | 5598 e | 3888 e | 1965 e | 1006 e | 582 |
| 800S200-118 | 50 | 17437 e | 9808 e | 6277 e | 4359 e | 2274 e | 1164 e | 674 |
| 800S250-118 | 50 | 16794 e | 9447 e | 6046 e | 4199 e | 2362 e | 1333 e | 771 |

**1** e = web stiffeners required at each support

See Header Load Table Notes

# Header Allowable Uniform Loads (lb/ft)

| Section | Yield, Fy, ksi | Span | | | | | | |
|---|---|---|---|---|---|---|---|---|
| | | 3 (ft) | 4 (ft) | 5 (ft) | 6 (ft) | 8 (ft) | 10 (ft) | 12 (ft) |
| 1000S162-43[1] | 33 | 1115 e | 836 e | 669 e | 557 e | 418 e | 280 e | 194 e |
| 1000S200-43[1] | 33 | 1115 e | 836 e | 669 e | 557 e | 418 e | 317 e | 220 e |
| 1000S250-43[1] | 33 | 1115 e | 836 e | 669 e | 557 e | 418 e | 334 e | 241 e |
| 1000S162-54 | 33 | 2213 e | 1660 e | 1328 e | 1107 e | 697 e | 446 e | 310 e |
| 1000S162-54 | 50 | 2213 e | 1660 e | 1328 e | 1107 e | 830 e | 611 e | 424 e |
| 1000S200-54 | 33 | 2213 e | 1660 e | 1328 e | 1107 e | 806 e | 516 e | 358 e |
| 1000S200-54 | 50 | 2213 e | 1660 e | 1328 e | 1107 e | 830 e | 663 e | 460 e |
| 1000S250-54 | 33 | 2213 e | 1660 e | 1328 e | 1107 e | 830 e | 594 e | 412 e |
| 1000S250-54 | 50 | 2213 e | 1660 e | 1328 e | 1107 e | 830 e | 664 e | 505 e |
| 1000S162-68 | 50 | 4460 e | 3345 e | 2676 e | 2230 e | 1323 e | 847 e | 588 e |
| 1000S200-68 | 50 | 4460 e | 3345 e | 2676 e | 2230 e | 1490 e | 954 e | 662 e |
| 1000S250-68 | 50 | 4460 e | 3345 e | 2676 e | 2230 e | 1673 e | 1092 e | 759 e |
| 1000S162-97 | 50 | 13149 e | 8120 e | 5197 e | 3609 e | 2030 e | 1299 e | 858 e |
| 1000S200-97 | 50 | 13149 e | 9298 e | 5950 e | 4132 e | 2324 e | 1488 e | 978 e |
| 1000S250-97 | 50 | 13149 e | 9862 e | 6709 e | 4659 e | 2621 e | 1677 e | 1104 e |
| 1000S162-118 | 50 | 19372 e | 10897 e | 6974 e | 4843 e | 2724 e | 1743 e | 1021 e |
| 1000S200-118 | 50 | 21652 e | 12453 e | 7970 e | 5534 e | 3113 e | 1992 e | 1166 e |
| 1000S250-118 | 50 | 21652 e | 12938 e | 8280 e | 5750 e | 3234 e | 2070 e | 1320 e |
| 1200S162-54[1] | 33 | 1836 e | 1377 e | 1102 e | 918 e | 689 e | 454 e | 315 e |
| 1200S162-54[1] | 50 | 1836 e | 1377 e | 1102 e | 918 e | 689 e | 551 e | 433 e |
| 1200S200-54[1] | 33 | 1836 e | 1377 e | 1102 e | 918 e | 689 e | 524 e | 364 e |
| 1200S200-54[1] | 50 | 1836 e | 1377 e | 1102 e | 918 e | 689 e | 551 e | 459 e |
| 1200S250-54[1] | 33 | 1836 e | 1377 e | 1102 e | 918 e | 689 e | 534 e | 371 e |
| 1200S250-54[1] | 50 | 1836 e | 1377 e | 1102 e | 918 e | 689 e | 551 e | 459 e |
| 1200S162-68 | 50 | 3693 e | 2770 e | 2216 e | 1847 e | 1385 e | 1034 e | 718 e |
| 1200S200-68 | 50 | 3693 e | 2770 e | 2216 e | 1847 e | 1385 e | 1108 e | 807 e |
| 1200S250-68 | 50 | 3693 e | 2770 e | 2216 e | 1847 e | 1385 e | 1108 e | 814 e |
| 1200S162-97 | 50 | 10860 e | 8145 e | 6476 e | 4497 e | 2530 e | 1619 e | 1124 e |
| 1200S200-97 | 50 | 10860 e | 8145 e | 6516 e | 5130 e | 2886 e | 1847 e | 1283 e |
| 1200S250-97 | 50 | 10860 e | 8145 e | 6516 e | 5430 e | 3117 e | 1995 e | 1385 e |
| 1200S162-118 | 50 | 19976 e | 12852 e | 8225 e | 5712 e | 3213 e | 2056 e | 1428 e |
| 1200S200-118 | 50 | 19976 e | 14591 e | 9338 e | 6485 e | 3648 e | 2335 e | 1621 e |
| 1200S250-118 | 50 | 19976 e | 14982 e | 10438 e | 7249 e | 4077 e | 2609 e | 1812 e |
| 1200S300-118 | 50 | 19976 e | 14982 e | 11551 e | 8022 e | 4512 e | 2888 e | 2005 e |
| 1200S350-118 | 50 | 19976 e | 14982 e | 11986 e | 9241 e | 5198 e | 3327 e | 2310 e |
| 1400S200-54[1] | 33 | 1568 e | 1176 e | 941 e | 784 e | 588 e | 470 e | 392 e |
| 1400S200-54[1] | 50 | 1568 e | 1176 e | 941 e | 784 e | 588 e | 470 e | 392 e |
| 1400S250-54[1] | 33 | 1568 e | 1176 e | 941 e | 784 e | 588 e | 470 e | 392 e |
| 1400S250-54[1] | 50 | 1568 e | 1176 e | 941 e | 784 e | 588 e | 470 e | 392 e |
| 1400S300-54[1] | 33 | 1568 e | 1176 e | 941 e | 784 e | 588 e | 470 e | 392 e |
| 1400S300-54[1] | 50 | 1568 e | 1176 e | 941 e | 784 e | 588 e | 470 e | 392 e |
| 1400S200-68 | 50 | 3152 e | 2364 e | 1891 e | 1576 e | 1182 e | 946 e | 788 e |
| 1400S250-68 | 50 | 3152 e | 2364 e | 1891 e | 1576 e | 1182 e | 946 e | 788 e |
| 1400S300-68 | 50 | 3152 e | 2364 e | 1891 e | 1576 e | 1182 e | 946 e | 788 e |
| 1400S200-97 | 50 | 9251 e | 6938 e | 5550 e | 4625 e | 3444 e | 2204 e | 1531 e |
| 1400S250-97 | 50 | 9251 e | 6938 e | 5550 e | 4625 e | 3469 e | 2373 e | 1648 e |
| 1400S300-97 | 50 | 9251 e | 6938 e | 5550 e | 4625 e | 3469 e | 2516 e | 1747 e |
| 1400S200-118 | 50 | 16991 e | 12743 e | 10194 e | 7825 e | 4401 e | 2817 e | 1956 e |
| 1400S250-118 | 50 | 16991 e | 12743 e | 10194 e | 8495 e | 4899 e | 3135 e | 2177 e |
| 1400S300-118 | 50 | 16991 e | 12743 e | 10194 e | 8495 e | 5224 e | 3344 e | 2322 e |
| 1600S200-68[1] | 50 | 2749 e | 2062 e | 1650 e | 1375 e | 1031 e | 825 e | 687 e |
| 1600S250-68[1] | 50 | 2749 e | 2062 e | 1650 e | 1375 e | 1031 e | 825 e | 687 e |
| 1600S300-68[1] | 50 | 2749 e | 2062 e | 1650 e | 1375 e | 1031 e | 825 e | 687 e |
| 1600S350-68[1] | 50 | 2749 e | 2062 e | 1650 e | 1375 e | 1031 e | 825 e | 687 e |

**1** e = web stiffeners required at each support

See Header Load Table Notes

# Header Allowable Uniform Loads (lb/ft)

| Section | Yield, Fy, ksi | Span | | | | | | |
|---|---|---|---|---|---|---|---|---|
| | | 3 (ft) | 4 (ft) | 5 (ft) | 6 (ft) | 8 (ft) | 10 (ft) | 12 (ft) |
| 1600S200-97 | 50 | 8056 e | 6042 e | 4834 e | 4028 e | 3021 e | 2417 e | 1778 e |
| 1600S250-97 | 50 | 8056 e | 6042 e | 4834 e | 4028 e | 3021 e | 2417 e | 1909 e |
| 1600S300-97 | 50 | 8056 e | 6042 e | 4834 e | 4028 e | 3021 e | 2417 e | 2014 e |
| 1600S350-97 | 50 | 8056 e | 6042 e | 4834 e | 4028 e | 3021 e | 2417 e | 2014 e |
| 1600S200-118 | 50 | 14781 e | 11086 e | 8869 e | 7391 e | 5153 e | 3298 e | 2290 e |
| 1600S250-118 | 50 | 14781 e | 11086 e | 8869 e | 7391 e | 5543 e | 3660 e | 2541 e |
| 1600S300-118 | 50 | 14781 e | 11086 e | 8869 e | 7391 e | 5543 e | 3895 e | 2705 e |
| 1600S350-118 | 50 | 14781 e | 11086 e | 8869 e | 7391 e | 5543 e | 4434 e | 3115 e |

**1** e = web stiffeners required at each support

See Header Load Table Notes



# Web Crippling Load Tables

## Web Crippling Load Table Notes

1. All capacities listed are calculated using AISI S100-16/S2-20.
2. Web crippling capacities calculated are for studs with stiffened or partially stiffened flanges.
3. Tabulated web crippling capacities are for single members only. For multiple members, multiply the tabulated values by number of members in the assembly.
4. Listed allowable capacities are based on members 'fastened to supports', except back-to-back members under two-flange loading (condition 3 and 4) for which data for 'fastened to support' is unavailable in the AISI S100-16/S2-20.
5. Listed allowable capacities are for unpunched webs. Capacity reduction for end and interior one flange loading (conditions 1 and 2) near punchouts may be required per Section G6 of S100.

## Web Crippling Conditions

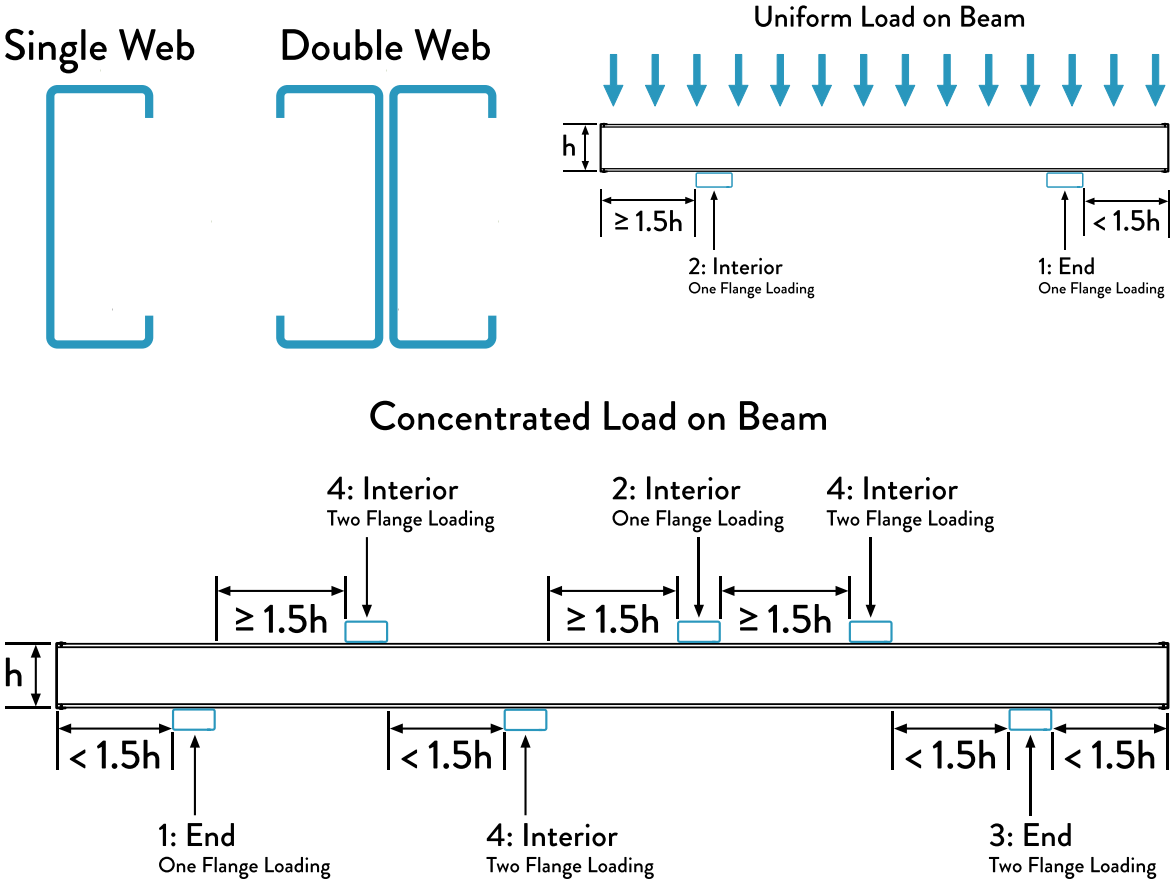

# Allowable Web Crippling Loads (lbs) - Single Members

| Member | Design Thickness | Inside Radius | Yield Str | Condition 1 | | | | Condition 2 | | | | Condition 3 | | | | Condition 4 | | | |
|---|---|---|---|---|---|---|---|---|---|---|---|---|---|---|---|---|---|---|---|
| | | | | 1 | 3.5 | 4 | 6 | 1 | 3.5 | 4 | 6 | 1 | 3.5 | 4 | 6 | 1 | 3.5 | 4 | 6 |
| 162S - 18 | 0.0188 | 0.0843 | 33 | 55 | 90 [1] | 95 [1,2] | 112 [1,2] | 87 | 125 [1] | 131 [1,2] | 151 [1,2] | 45 | 64 [1] | 67 [1,2] | 76 [1,2] | 122 | 161 [1] | 166 [1,2] | 187 [1,2] |
| 162S - 27 | 0.0283 | 0.0796 | 33 | 122 | 194 [1] | 205 [1] | 242 [1,2] | 218 | 304 [1] | 317 [1] | 361 [1,2] | 111 | 151 [1] | 157 [1] | 178 [1,2] | 290 | 371 [1] | 383 [1] | 425 [1,2] |
| 162S - 30 | 0.0312 | 0.0781 | 33 | 148 | 233 [1] | 246 [1] | 290 [1] | 269 | 373 [1] | 388 [1] | 442 [1] | 137 | 185 [1] | 192 [1] | 217 [1] | 356 | 452 [1] | 466 [1] | 516 [1] |
| 162S - 33 | 0.0346 | 0.0764 | 33 | 180 | 282 [1] | 297 [1] | 350 [1] | 336 | 462 [1] | 481 [1] | 546 [1] | 170 | 229 [1] | 237 [1] | 267 [1] | 441 | 557 [1] | 574 [1] | 634 [1] |
| 162S - 43 | 0.0451 | 0.0712 | 33 | 298 | 459 [1] | 483 [1] | 566 [1] | 589 | 793 [1] | 823 [1] | 929 [1] | 297 | 390 [1] | 404 [1] | 452 [1] | 764 | 946 [1] | 973 [1] | 1067 [1] |
| 162S - 54 | 0.0566 | 0.0849 | 33 | 447 | 678 [1] | 712 [1] | 832 [1] | 904 | 1196 [1] | 1239 [1] | 1390 [1] | 471 | 609 [1] | 629 [1] | 700 [1] | 1203 | 1466 [1] | 1506 [1] | 1642 [1] |
| 162S - 54 | 0.0566 | 0.0849 | 50 | 677 | 1027 [1] | 1079 [1] | 1260 [1] | 1370 | 1812 [1] | 1877 [1] | 2105 [1] | 714 | 922 [1] | 953 [1] | 1061 [1] | 1823 | 2222 [1] | 2281 [1] | 2487 [1] |
| 162S - 68 | 0.0713 | 0.1069 | 33 | 672 | 1004 [1] | 1054 [1] | 1225 [1] | 1386 | 1802 [1] | 1863 [1] | 2077 [1] | 750 | 952 [1] | 982 [1] | 1087 [1] | 1901 | 2282 [1] | 2339 [1] | 2536 [1] |
| 162S - 68 | 0.0713 | 0.1069 | 50 | 1019 | 1522 [1] | 1596 [1] | 1856 [1] | 2100 | 2730 [1] | 2823 [1] | 3148 [1] | 1136 | 1443 [1] | 1488 [1] | 1646 [1] | 2880 | 3458 [1] | 3544 [1] | 3842 [1] |
| 250S - 18 | 0.0188 | 0.0843 | 33 | 52 | 84 | 89 [2] | 106 [1,2] | 85 | 122 | 128 [2] | 147 [1,2] | 37 | 51 | 54 [2] | 61 [1,2] | 109 | 145 | 150 [2] | 168 [1,2] |
| 250S - 27 | 0.0283 | 0.0796 | 33 | 117 | 186 | 196 | 231 [1,2] | 213 | 298 | 310 | 354 [1,2] | 96 | 130 | 135 | 153 [1,2] | 268 | 343 | 354 | 393 [1,2] |
| 250S - 30 | 0.0312 | 0.0781 | 33 | 141 | 223 | 235 | 277 [1] | 264 | 366 | 381 | 433 [1] | 119 | 161 | 167 | 189 [1] | 330 | 420 | 433 | 479 [1] |
| 250S - 33 | 0.0346 | 0.0764 | 33 | 173 | 271 | 285 | 336 [1] | 330 | 453 | 472 | 535 [1] | 150 | 201 | 209 | 235 [1] | 411 | 519 | 535 | 591 [1] |
| 250S - 43 | 0.0451 | 0.0712 | 33 | 287 | 443 | 466 | 547 [1] | 580 | 780 | 810 | 913 [1] | 267 | 351 | 364 | 407 [1] | 720 | 892 | 918 | 1006 [1] |
| 250S - 54 | 0.0566 | 0.0849 | 33 | 433 | 657 | 690 | 806 [1] | 891 | 1178 | 1221 | 1369 [1] | 430 | 556 | 574 | 639 [1] | 1142 | 1392 | 1429 | 1558 [1] |
| 250S - 54 | 0.0566 | 0.0849 | 50 | 656 | 996 | 1046 | 1222 [1] | 1350 | 1785 | 1850 | 2075 [1] | 652 | 842 | 870 | 968 [1] | 1730 | 2109 | 2165 | 2361 [1] |
| 250S - 68 | 0.0713 | 0.1069 | 33 | 654 | 977 | 1024 | 1191 [1] | 1368 | 1778 | 1839 | 2050 [1] | 693 | 880 | 907 | 1004 [1] | 1815 | 2179 | 2233 | 2421 [1] |
| 250S - 68 | 0.0713 | 0.1069 | 50 | 990 | 1480 | 1552 | 1805 [1] | 2073 | 2694 | 2786 | 3106 [1] | 1049 | 1333 | 1375 | 1521 [1] | 2750 | 3302 | 3384 | 3669 [1] |
| 350S - 18 | 0.0188 | 0.0843 | 33 | 49 | 80 | 84 [2] | 100 [2] | 83 | 119 | 124 [2] | 143 [2] | 28 | 40 | 42 [2] | 48 [2] | 98 | 130 | 134 [2] | 151 [2] |
| 350S - 27 | 0.0283 | 0.0796 | 33 | 112 | 177 | 187 | 221 [2] | 209 | 292 | 304 | 347 [2] | 81 | 111 | 115 | 130 [2] | 247 | 316 | 327 | 362 [2] |
| 350S - 30 | 0.0312 | 0.0781 | 33 | 135 | 214 | 226 | 266 | 259 | 359 | 374 | 425 | 103 | 139 | 144 | 163 | 306 | 389 | 402 | 445 |
| 350S - 33 | 0.0346 | 0.0764 | 33 | 166 | 260 | 274 | 323 | 324 | 445 | 463 | 526 | 131 | 175 | 182 | 205 | 384 | 484 | 499 | 551 |
| 350S - 43 | 0.0451 | 0.0712 | 33 | 278 | 428 | 451 | 528 | 571 | 768 | 798 | 900 | 240 | 315 | 326 | 365 | 680 | 842 | 866 | 949 |
| 350S - 54 | 0.0566 | 0.0849 | 33 | 420 | 638 | 670 | 783 | 879 | 1162 | 1204 | 1351 | 392 | 507 | 524 | 583 | 1086 | 1324 | 1359 | 1482 |
| 350S - 54 | 0.0566 | 0.0849 | 50 | 637 | 967 | 1016 | 1186 | 1331 | 1761 | 1825 | 2046 | 594 | 768 | 794 | 883 | 1645 | 2005 | 2059 | 2245 |
| 350S - 68 | 0.0713 | 0.1069 | 33 | 637 | 951 | 998 | 1160 | 1351 | 1756 | 1816 | 2025 | 640 | 813 | 839 | 928 | 1737 | 2085 | 2137 | 2317 |
| 350S - 68 | 0.0713 | 0.1069 | 50 | 965 | 1441 | 1512 | 1758 | 2047 | 2661 | 2752 | 3068 | 970 | 1232 | 1271 | 1406 | 2631 | 3159 | 3238 | 3510 |
| 350S - 97 | 0.1017 | 0.1525 | 33 | 1209 | 1760 | 1841 | 2126 | 2629 | 3328 | 3431 | 3792 | 1343 | 1663 | 1710 | 1876 | 3562 | 4184 | 4276 | 4597 |
| 350S - 97 | 0.1017 | 0.1525 | 50 | 1831 | 2666 | 2790 | 3221 | 3983 | 5042 | 5199 | 5745 | 2035 | 2520 | 2592 | 2842 | 5397 | 6339 | 6479 | 6966 |
| 362S - 18 | 0.0188 | 0.0843 | 33 | 49 | 79 | 84 [2] | 99 [2] | 82 | 119 | 124 [2] | 143 [2] | 27 | 39 | 40 [2] | 46 [2] | 97 | 128 | 133 [2] | 149 [2] |
| 362S - 27 | 0.0283 | 0.0796 | 33 | 111 | 177 | 186 | 220 [2] | 209 | 291 | 303 | 346 [2] | 80 | 108 | 113 | 127 [2] | 245 | 313 | 324 | 359 [2] |
| 362S - 30 | 0.0312 | 0.0781 | 33 | 135 | 213 | 224 | 265 | 258 | 358 | 373 | 424 | 101 | 136 | 141 | 160 | 304 | 386 | 398 | 441 |
| 362S - 33 | 0.0346 | 0.0764 | 33 | 165 | 259 | 273 | 322 | 323 | 444 | 462 | 525 | 129 | 173 | 179 | 202 | 381 | 480 | 495 | 547 |
| 362S - 43 | 0.0451 | 0.0712 | 33 | 277 | 427 | 449 | 526 | 570 | 767 | 796 | 898 | 236 | 311 | 322 | 360 | 675 | 836 | 860 | 943 |
| 362S - 54 | 0.0566 | 0.0849 | 33 | 419 | 636 | 668 | 780 | 877 | 1160 | 1202 | 1348 | 388 | 501 | 518 | 577 | 1079 | 1316 | 1351 | 1473 |
| 362S - 54 | 0.0566 | 0.0849 | 50 | 634 | 963 | 1012 | 1182 | 1329 | 1758 | 1822 | 2043 | 588 | 760 | 785 | 874 | 1635 | 1994 | 2047 | 2232 |
| 362S - 68 | 0.0713 | 0.1069 | 33 | 635 | 948 | 995 | 1157 | 1349 | 1754 | 1813 | 2022 | 635 | 806 | 831 | 920 | 1728 | 2074 | 2126 | 2305 |
| 362S - 68 | 0.0713 | 0.1069 | 50 | 962 | 1437 | 1507 | 1753 | 2044 | 2657 | 2748 | 3064 | 961 | 1221 | 1259 | 1393 | 2618 | 3143 | 3221 | 3492 |
| 362S - 97 | 0.1017 | 0.1525 | 33 | 1206 | 1755 | 1837 | 2120 | 2626 | 3324 | 3427 | 3787 | 1333 | 1651 | 1698 | 1862 | 3547 | 4166 | 4258 | 4578 |
| 362S - 97 | 0.1017 | 0.1525 | 50 | 1827 | 2659 | 2783 | 3212 | 3979 | 5036 | 5192 | 5738 | 2020 | 2501 | 2573 | 2821 | 5374 | 6313 | 6452 | 6937 |
| 400S - 27 | 0.0283 | 0.0796 | 33 | 109 | 174 | 183 | 217 [2] | 207 | 289 | 301 | 344 [2] | 75 | 102 | 106 | 120 [2] | 238 | 305 | 315 | 349 [2] |
| 400S - 30 | 0.0312 | 0.0781 | 33 | 133 | 210 | 221 | 261 | 257 | 356 | 370 | 421 | 95 | 129 | 134 | 151 | 296 | 376 | 388 | 429 |
| 400S - 33 | 0.0346 | 0.0764 | 33 | 163 | 256 | 269 | 317 | 322 | 442 | 460 | 522 | 122 | 164 | 170 | 192 | 372 | 469 | 483 | 534 |
| 400S - 43 | 0.0451 | 0.0712 | 33 | 274 | 422 | 444 | 520 | 567 | 763 | 792 | 893 | 227 | 299 | 309 | 346 | 662 | 819 | 843 | 924 |
| 400S - 54 | 0.0566 | 0.0849 | 33 | 415 | 629 | 661 | 772 | 873 | 1155 | 1197 | 1342 | 376 | 485 | 502 | 558 | 1061 | 1293 | 1328 | 1448 |
| 400S - 54 | 0.0566 | 0.0849 | 50 | 628 | 954 | 1002 | 1170 | 1323 | 1750 | 1813 | 2034 | 569 | 735 | 760 | 846 | 1607 | 1960 | 2012 | 2194 |
| 400S - 68 | 0.0713 | 0.1069 | 33 | 629 | 940 | 986 | 1147 | 1344 | 1746 | 1806 | 2014 | 617 | 784 | 809 | 895 | 1702 | 2044 | 2094 | 2271 |
| 400S - 68 | 0.0713 | 0.1069 | 50 | 953 | 1424 | 1494 | 1737 | 2036 | 2646 | 2737 | 3051 | 936 | 1188 | 1226 | 1356 | 2579 | 3097 | 3173 | 3441 |
| 400S - 97 | 0.1017 | 0.1525 | 33 | 1197 | 1742 | 1823 | 2105 | 2617 | 3312 | 3415 | 3774 | 1305 | 1616 | 1662 | 1823 | 3504 | 4116 | 4207 | 4523 |
| 400S - 97 | 0.1017 | 0.1525 | 50 | 1814 | 2640 | 2762 | 3189 | 3965 | 5018 | 5175 | 5718 | 1978 | 2449 | 2518 | 2761 | 5309 | 6236 | 6374 | 6853 |
| 550S - 27 | 0.0283 | 0.0796 | 33 | 103 | 164 | 173 | 205 [2] | 202 | 282 | 294 | 336 [2] | 58 | 79 | 82 | 93 [2] | 214 | 274 | 283 | 314 [2] |
| 550S - 30 | 0.0312 | 0.0781 | 33 | 126 | 199 | 210 | 248 | 251 | 348 | 362 | 412 | 76 | 103 | 107 | 120 | 268 | 341 | 351 | 389 |
| 550S - 33 | 0.0346 | 0.0764 | 33 | 155 | 243 | 256 | 302 | 315 | 432 | 450 | 511 | 100 | 134 | 139 | 157 | 339 | 428 | 441 | 487 |
| 550S - 43 | 0.0451 | 0.0712 | 33 | 262 | 405 | 426 | 499 | 556 | 749 | 778 | 877 | 195 | 256 | 265 | 297 | 614 | 760 | 782 | 858 |
| 550S - 54 | 0.0566 | 0.0849 | 33 | 400 | 607 | 638 | 745 | 859 | 1136 | 1177 | 1320 | 331 | 428 | 443 | 493 | 995 | 1213 | 1246 | 1358 |
| 550S - 54 | 0.0566 | 0.0849 | 50 | 606 | 920 | 966 | 1128 | 1302 | 1722 | 1784 | 2001 | 502 | 649 | 671 | 746 | 1508 | 1838 | 1887 | 2058 |

**1** Bearing length to web height ratio, N/h, exceeds limit of 2.0

**2** Bearing length to thickness ratio, N/t, exceeds limit of 210

See Web Crippling Load Table Notes

# Allowable Web Crippling Loads (lbs) - Single Members

| Member | Design Thickness | Inside Radius | Yield Str | Condition 1 | | | | Condition 2 | | | | Condition 3 | | | | Condition 4 | | | |
|---|---|---|---|---|---|---|---|---|---|---|---|---|---|---|---|---|---|---|---|
| | | | | 1 | 3.5 | 4 | 6 | 1 | 3.5 | 4 | 6 | 1 | 3.5 | 4 | 6 | 1 | 3.5 | 4 | 6 |
| 550S - 68 | 0.0713 | 0.1069 | 33 | 609 | 911 | 955 | 1111 | 1324 | 1721 | 1780 | 1985 | 557 | 707 | 729 | 807 | 1611 | 1934 | 1982 | 2149 |
| 550S - 68 | 0.0713 | 0.1069 | 50 | 923 | 1380 | 1447 | 1683 | 2007 | 2608 | 2697 | 3007 | 844 | 1071 | 1105 | 1223 | 2441 | 2931 | 3003 | 3256 |
| 550S - 97 | 0.1017 | 0.1525 | 33 | 1166 | 1697 | 1776 | 2050 | 2585 | 3272 | 3374 | 3728 | 1205 | 1492 | 1535 | 1683 | 3352 | 3937 | 4024 | 4326 |
| 550S - 97 | 0.1017 | 0.1525 | 50 | 1766 | 2571 | 2691 | 3106 | 3917 | 4957 | 5112 | 5649 | 1826 | 2261 | 2326 | 2550 | 5079 | 5966 | 6097 | 6555 |
| 600S - 30 | 0.0312 | 0.0781 | 33 | 124 | 196 | 206 | 244 | 249 | 345 | 360 | 409 | 70 | 95 | 98 | 111 | 260 | 330 | 340 | 377 |
| 600S - 33 | 0.0346 | 0.0764 | 33 | 153 | 240 | 253 | 297 | 313 | 430 | 447 | 507 | 93 | 125 | 130 | 146 | 330 | 416 | 429 | 473 |
| 600S - 43 | 0.0451 | 0.0712 | 33 | 259 | 400 | 420 | 493 | 553 | 745 | 773 | 872 | 185 | 243 | 252 | 282 | 600 | 743 | 764 | 838 |
| 600S - 54 | 0.0566 | 0.0849 | 33 | 395 | 600 | 631 | 736 | 855 | 1131 | 1172 | 1314 | 318 | 411 | 425 | 473 | 975 | 1189 | 1221 | 1331 |
| 600S - 54 | 0.0566 | 0.0849 | 50 | 599 | 909 | 956 | 1116 | 1295 | 1713 | 1775 | 1991 | 482 | 623 | 644 | 716 | 1478 | 1802 | 1850 | 2017 |
| 600S - 68 | 0.0713 | 0.1069 | 33 | 604 | 902 | 946 | 1100 | 1319 | 1714 | 1772 | 1976 | 539 | 684 | 706 | 781 | 1584 | 1901 | 1949 | 2113 |
| 600S - 68 | 0.0713 | 0.1069 | 50 | 914 | 1366 | 1433 | 1666 | 1998 | 2596 | 2685 | 2994 | 816 | 1036 | 1069 | 1183 | 2399 | 2881 | 2952 | 3201 |
| 600S - 97 | 0.1017 | 0.1525 | 50 | 1752 | 2551 | 2669 | 3081 | 3902 | 4939 | 5093 | 5628 | 1781 | 2205 | 2268 | 2487 | 5010 | 5885 | 6014 | 6466 |
| 600S - 118 | 0.1242 | 0.1863 | 50 | 2528 | 3625 | 3788 | 4354 | 5698 | 7108 | 7318 | 8046 | 2734 | 3339 | 3429 | 3741 | 7555 | 8772 | 8952 | 9581 |
| 800S - 43 | 0.0451 | 0.0712 | 33 | 247 | 381 | 401 | 470 | 542 | 730 | 757 | 854 | 150 | 197 | 204 | 228 | 548 | 678 | 698 | 765 |
| 800S - 54 | 0.0566 | 0.0849 | 33 | 379 | 576 | 605 | 706 | 839 | 1110 | 1150 | 1290 | 270 | 349 | 361 | 402 | 904 | 1102 | 1131 | 1234 |
| 800S - 54 | 0.0566 | 0.0849 | 50 | 575 | 872 | 917 | 1070 | 1272 | 1682 | 1743 | 1955 | 409 | 529 | 547 | 608 | 1370 | 1670 | 1714 | 1869 |
| 800S - 68 | 0.0713 | 0.1069 | 33 | 582 | 870 | 912 | 1061 | 1297 | 1686 | 1744 | 1944 | 473 | 601 | 619 | 685 | 1485 | 1783 | 1827 | 1981 |
| 800S - 68 | 0.0713 | 0.1069 | 50 | 882 | 1318 | 1382 | 1607 | 1966 | 2555 | 2642 | 2946 | 716 | 910 | 939 | 1038 | 2250 | 2701 | 2768 | 3001 |
| 800S - 97 | 0.1017 | 0.1525 | 50 | 1702 | 2477 | 2592 | 2992 | 3850 | 4873 | 5025 | 5553 | 1618 | 2003 | 2060 | 2259 | 4761 | 5593 | 5716 | 6146 |
| 800S - 118 | 0.1242 | 0.1863 | 50 | 2462 | 3531 | 3689 | 4241 | 5629 | 7023 | 7229 | 7949 | 2518 | 3075 | 3158 | 3445 | 7223 | 8387 | 8559 | 9160 |
| 1000S - 54 | 0.0566 | 0.0849 | 33 | 365 | 554 | 582 | 680 | 826 | 1092 | 1132 | 1269 | 228 | 295 | 305 | 339 | 841 | 1026 | 1053 | 1148 |
| 1000S - 54 | 0.0566 | 0.0849 | 50 | 553 | 840 | 882 | 1031 | 1251 | 1655 | 1715 | 1923 | 346 | 447 | 462 | 514 | 1275 | 1554 | 1595 | 1740 |
| 1000S - 68 | 0.0713 | 0.1069 | 33 | 563 | 842 | 883 | 1027 | 1279 | 1662 | 1719 | 1917 | 415 | 527 | 544 | 602 | 1398 | 1679 | 1721 | 1866 |
| 1000S - 68 | 0.0713 | 0.1069 | 50 | 854 | 1275 | 1338 | 1556 | 1938 | 2518 | 2604 | 2904 | 629 | 799 | 824 | 912 | 2119 | 2544 | 2607 | 2827 |
| 1000S - 97 | 0.1017 | 0.1525 | 50 | 1657 | 2413 | 2525 | 2914 | 3805 | 4816 | 4966 | 5488 | 1476 | 1827 | 1879 | 2060 | 4545 | 5338 | 5456 | 5866 |
| 1000S - 118 | 0.1242 | 0.1863 | 50 | 2405 | 3449 | 3604 | 4143 | 5569 | 6948 | 7152 | 7864 | 2330 | 2845 | 2921 | 3187 | 6934 | 8051 | 8217 | 8794 |
| 1200S - 68 | 0.0713 | 0.1069 | 33 | 547 | 817 | 857 | 996 | 1262 | 1641 | 1697 | 1892 | 363 | 462 | 476 | 527 | 1320 | 1585 | 1625 | 1762 |
| 1200S - 68 | 0.0713 | 0.1069 | 50 | 828 | 1237 | 1298 | 1509 | 1913 | 2486 | 2571 | 2866 | 551 | 699 | 721 | 798 | 2001 | 2402 | 2462 | 2669 |
| 1200S - 97 | 0.1017 | 0.1525 | 50 | 1618 | 2355 | 2464 | 2844 | 3764 | 4764 | 4912 | 5429 | 1348 | 1668 | 1716 | 1882 | 4350 | 5109 | 5222 | 5614 |
| 1200S - 118 | 0.1242 | 0.1863 | 50 | 2354 | 3375 | 3527 | 4054 | 5515 | 6881 | 7083 | 7788 | 2161 | 2638 | 2709 | 2956 | 6675 | 7750 | 7910 | 8465 |
| 1400S - 68 | 0.0713 | 0.1069 | 33 | 531 | 793 | 832 | 968 | 1247 | 1621 | 1676 | 1869 | 316 | 401 | 414 | 458 | 1249 | 1500 | 1537 | 1666 |
| 1400S - 68 | 0.0713 | 0.1069 | 50 | 805 | 1202 | 1261 | 1466 | 1890 | 2456 | 2540 | 2832 | 479 | 608 | 627 | 694 | 1892 | 2272 | 2329 | 2525 |
| 1400S - 97 | 0.1017 | 0.1525 | 50 | 1581 | 2302 | 2408 | 2780 | 3727 | 4717 | 4864 | 5375 | 1230 | 1523 | 1567 | 1718 | 4171 | 4900 | 5008 | 5384 |
| 1400S - 118 | 0.1242 | 0.1863 | 50 | 2307 | 3308 | 3456 | 3973 | 5466 | 6819 | 7020 | 7719 | 2006 | 2449 | 2515 | 2744 | 6437 | 7474 | 7628 | 8164 |
| 1600S - 97 | 0.1017 | 0.1525 | 50 | 1547 | 2252 | 2357 | 2721 | 3692 | 4673 | 4818 | 5325 | 1121 | 1388 | 1428 | 1566 | 4005 | 4705 | 4809 | 5170 |
| 1600S - 118 | 0.1242 | 0.1863 | 50 | 2263 | 3245 | 3391 | 3898 | 5420 | 6762 | 6961 | 7654 | 1862 | 2274 | 2335 | 2548 | 6217 | 7219 | 7367 | 7884 |

**1** Bearing length to web height ratio, N/h, exceeds limit of 2.0

**2** Bearing length to thickness ratio, N/t, exceeds limit of 210

See Web Crippling Load Table Notes

# Allowable Web Crippling Loads (lbs) - Back-to-Back Members

| Member | Design Thickness | Inside Radius | Yield Str | Condition 1 | | | | Condition 2 | | | | Condition 3 | | | | Condition 4 | | | |
|---|---|---|---|---|---|---|---|---|---|---|---|---|---|---|---|---|---|---|---|
| | | | | 1 | 3.5 | 4 | 6 | 1 | 3.5 | 4 | 6 | 1 | 3.5 | 4 | 6 | 1 | 3.5 | 4 | 6 |
| 162S - 18 | 0.0188 | 0.0843 | 33 | 124 | 196 [1] | 207 [1,2] | 244 [1,2] | 156 | 217 [1] | 226 [1,2] | 257 [1,2] | 76 | 100 [1] | 103 [1,2] | 116 [1,2] | 153 | 202 [1] | 209 [1,2] | 234 [1,2] |
| 162S - 27 | 0.0283 | 0.0796 | 33 | 268 | 413 [1] | 435 [1] | 510 [1,2] | 363 | 489 [1] | 507 [1] | 572 [1,2] | 184 | 236 [1] | 244 [1] | 270 [1,2] | 386 | 494 [1] | 510 [1] | 566 [1,2] |
| 162S - 30 | 0.0312 | 0.0781 | 33 | 321 | 493 [1] | 518 [1] | 606 [1] | 443 | 592 [1] | 614 [1] | 690 [1] | 227 | 288 [1] | 298 [1] | 329 [1] | 478 | 608 [1] | 628 [1] | 695 [1] |
| 162S - 33 | 0.0346 | 0.0764 | 33 | 389 | 593 [1] | 623 [1] | 729 [1] | 547 | 724 [1] | 750 [1] | 842 [1] | 283 | 357 [1] | 368 [1] | 406 [1] | 600 | 757 [1] | 781 [1] | 862 [1] |
| 162S - 43 | 0.0451 | 0.0712 | 33 | 638 | 953 [1] | 1000 [1] | 1163 [1] | 933 | 1211 [1] | 1252 [1] | 1395 [1] | 494 | 612 [1] | 629 [1] | 690 [1] | 1066 | 1320 [1] | 1358 [1] | 1489 [1] |
| 162S - 54 | 0.0566 | 0.0849 | 33 | 949 | 1395 [1] | 1462 [1] | 1692 [1] | 1427 | 1820 [1] | 1878 [1] | 2081 [1] | 784 | 956 [1] | 982 [1] | 1071 [1] | 1696 | 2068 [1] | 2123 [1] | 2315 [1] |
| 162S - 54 | 0.0566 | 0.0849 | 50 | 1438 | 2114 [1] | 2215 [1] | 2564 [1] | 2162 | 2757 [1] | 2846 [1] | 3153 [1] | 1188 | 1449 [1] | 1488 [1] | 1622 [1] | 2570 | 3134 [1] | 3217 [1] | 3508 [1] |
| 162S - 68 | 0.0713 | 0.1069 | 33 | 1418 | 2050 [1] | 2144 [1] | 2470 [1] | 2188 | 2744 [1] | 2826 [1] | 3113 [1] | 1250 | 1501 [1] | 1538 [1] | 1667 [1] | 2703 | 3246 [1] | 3326 [1] | 3606 [1] |
| 162S - 68 | 0.0713 | 0.1069 | 50 | 2148 | 3106 [1] | 3248 [1] | 3742 [1] | 3315 | 4157 [1] | 4282 [1] | 4717 [1] | 1894 | 2274 [1] | 2330 [1] | 2526 [1] | 4096 | 4918 [1] | 5040 [1] | 5464 [1] |
| 250S - 18 | 0.0188 | 0.0843 | 33 | 123 | 196 [1] | 206 [1,2] | 244 [1,2] | 156 | 216 [1] | 225 [1,2] | 256 [1,2] | 65 | 85 [1] | 88 [1,2] | 99 [1,2] | 131 | 172 [1] | 179 [1,2] | 200 [1,2] |
| 250S - 27 | 0.0283 | 0.0796 | 33 | 267 | 412 [1] | 434 [1] | 509 [1,2] | 363 | 488 [1] | 506 [1] | 571 [1,2] | 164 | 211 [1] | 217 [1] | 241 [1,2] | 344 | 441 [1] | 455 [1] | 505 [1,2] |
| 250S - 30 | 0.0312 | 0.0781 | 33 | 320 | 492 [1] | 517 [1] | 605 [1] | 443 | 590 [1] | 612 [1] | 689 [1] | 204 | 260 [1] | 268 [1] | 296 [1] | 430 | 547 [1] | 564 [1] | 625 [1] |
| 250S - 33 | 0.0346 | 0.0764 | 33 | 389 | 592 [1] | 622 [1] | 727 [1] | 546 | 723 [1] | 749 [1] | 840 [1] | 256 | 323 [1] | 333 [1] | 368 [1] | 544 | 686 [1] | 708 [1] | 781 [1] |
| 250S - 43 | 0.0451 | 0.0712 | 33 | 637 | 952 [1] | 999 [1] | 1162 [1] | 932 | 1209 [1] | 1250 [1] | 1393 [1] | 455 | 563 [1] | 580 [1] | 636 [1] | 982 | 1216 [1] | 1251 [1] | 1371 [1] |
| 250S - 54 | 0.0566 | 0.0849 | 33 | 947 | 1393 [1] | 1460 [1] | 1690 [1] | 1425 | 1817 [1] | 1876 [1] | 2078 [1] | 730 | 890 [1] | 914 [1] | 997 [1] | 1579 | 1925 [1] | 1977 [1] | 2155 [1] |
| 250S - 54 | 0.0566 | 0.0849 | 50 | 1435 | 2111 [1] | 2212 [1] | 2560 [1] | 2159 | 2753 [1] | 2842 [1] | 3149 [1] | 1106 | 1349 [1] | 1385 [1] | 1510 [1] | 2393 | 2917 [1] | 2995 [1] | 3266 [1] |
| 250S - 68 | 0.0713 | 0.1069 | 33 | 1416 | 2047 [1] | 2141 [1] | 2467 [1] | 2185 | 2740 [1] | 2823 [1] | 3109 [1] | 1174 | 1409 [1] | 1444 [1] | 1566 [1] | 2539 | 3048 [1] | 3124 [1] | 3387 [1] |
| 250S - 68 | 0.0713 | 0.1069 | 50 | 2145 | 3102 [1] | 3244 [1] | 3737 [1] | 3311 | 4152 [1] | 4277 [1] | 4711 [1] | 1778 | 2135 [1] | 2188 [1] | 2373 [1] | 3846 | 4618 [1] | 4733 [1] | 5132 [1] |
| 350S - 18 | 0.0188 | 0.0843 | 33 | 123 | 195 [1] | 206 [1,2] | 243 [1,2] | 156 | 216 [1] | 225 [1,2] | 256 [1,2] | 55 | 72 [1] | 75 [1,2] | 84 [1,2] | 110 | 145 [1] | 151 [1,2] | 169 [1,2] |
| 350S - 27 | 0.0283 | 0.0796 | 33 | 267 | 412 [1] | 433 [1] | 508 [1,2] | 362 | 487 [1] | 505 [1] | 570 [1,2] | 146 | 187 [1] | 193 [1] | 214 [1,2] | 306 | 391 [1] | 404 [1] | 448 [1,2] |
| 350S - 30 | 0.0312 | 0.0781 | 33 | 320 | 491 [1] | 516 [1] | 604 [1] | 442 | 589 [1] | 611 [1] | 688 [1] | 183 | 233 [1] | 240 [1] | 266 [1] | 386 | 490 [1] | 506 [1] | 560 [1] |
| 350S - 33 | 0.0346 | 0.0764 | 33 | 388 | 591 [1] | 621 [1] | 726 [1] | 545 | 721 [1] | 748 [1] | 839 [1] | 232 | 292 [1] | 301 [1] | 333 [1] | 492 | 621 [1] | 640 [1] | 706 [1] |
| 350S - 43 | 0.0451 | 0.0712 | 33 | 636 | 951 [1] | 997 [1] | 1160 [1] | 931 | 1207 [1] | 1248 [1] | 1391 [1] | 419 | 519 [1] | 534 [1] | 585 [1] | 904 | 1119 [1] | 1151 [1] | 1263 [1] |
| 350S - 54 | 0.0566 | 0.0849 | 33 | 946 | 1392 [1] | 1458 [1] | 1688 [1] | 1423 | 1815 [1] | 1873 [1] | 2075 [1] | 680 | 829 [1] | 852 [1] | 929 [1] | 1471 | 1794 [1] | 1842 [1] | 2008 [1] |
| 350S - 54 | 0.0566 | 0.0849 | 50 | 1434 | 2109 [1] | 2209 [1] | 2557 [1] | 2156 | 2750 [1] | 2838 [1] | 3144 [1] | 1031 | 1257 [1] | 1290 [1] | 1407 [1] | 2229 | 2718 [1] | 2791 [1] | 3043 [1] |
| 350S - 68 | 0.0713 | 0.1069 | 33 | 1414 | 2045 [1] | 2138 [1] | 2464 [1] | 2183 | 2737 [1] | 2819 [1] | 3106 [1] | 1104 | 1326 [1] | 1359 [1] | 1473 [1] | 2388 | 2867 [1] | 2939 [1] | 3186 [1] |
| 350S - 68 | 0.0713 | 0.1069 | 50 | 2143 | 3098 [1] | 3240 [1] | 3733 [1] | 3307 | 4147 [1] | 4272 [1] | 4706 [1] | 1673 | 2009 [1] | 2059 [1] | 2232 [1] | 3618 | 4345 [1] | 4452 [1] | 4827 [1] |
| 350S - 97 | 0.1017 | 0.1525 | 33 | 2641 | 3716 [1] | 3876 [1] | 4431 [1] | 4235 | 5181 [1] | 5321 [1] | 5809 [1] | 2305 | 2708 [1] | 2768 [1] | 2976 [1] | 4986 | 5857 [1] | 5986 [1] | 6435 [1] |
| 350S - 97 | 0.1017 | 0.1525 | 50 | 4002 | 5631 [1] | 5873 [1] | 6713 [1] | 6416 | 7850 [1] | 8062 [1] | 8802 [1] | 3493 | 4103 [1] | 4194 [1] | 4508 [1] | 7555 | 8874 [1] | 9070 [1] | 9751 [1] |
| 362S - 18 | 0.0188 | 0.0843 | 33 | 123 | 195 [1] | 206 [1,2] | 243 [1,2] | 155 | 216 [1] | 225 [1,2] | 256 [1,2] | 53 | 70 [1] | 73 [1,2] | 82 [1,2] | 108 | 142 [1] | 147 [1,2] | 165 [1,2] |
| 362S - 27 | 0.0283 | 0.0796 | 33 | 266 | 411 [1] | 433 [1] | 508 [1,2] | 362 | 487 [1] | 505 [1] | 570 [1,2] | 144 | 184 [1] | 190 [1] | 211 [1,2] | 301 | 386 [1] | 398 [1] | 442 [1,2] |
| 362S - 30 | 0.0312 | 0.0781 | 33 | 320 | 491 [1] | 516 [1] | 604 [1] | 442 | 589 [1] | 611 [1] | 687 [1] | 181 | 230 [1] | 237 [1] | 262 [1] | 381 | 484 [1] | 499 [1] | 553 [1] |
| 362S - 33 | 0.0346 | 0.0764 | 33 | 388 | 591 [1] | 621 [1] | 726 [1] | 545 | 721 [1] | 747 [1] | 839 [1] | 229 | 289 [1] | 298 [1] | 329 [1] | 486 | 613 [1] | 632 [1] | 698 [1] |
| 362S - 43 | 0.0451 | 0.0712 | 33 | 636 | 950 [1] | 997 [1] | 1160 [1] | 930 | 1207 [1] | 1248 [1] | 1391 [1] | 415 | 514 [1] | 528 [1] | 579 [1] | 895 | 1109 [1] | 1140 [1] | 1250 [1] |
| 362S - 54 | 0.0566 | 0.0849 | 33 | 946 | 1391 [1] | 1458 [1] | 1687 [1] | 1423 | 1815 [1] | 1873 [1] | 2075 [1] | 675 | 823 [1] | 845 [1] | 921 [1] | 1459 | 1779 [1] | 1826 [1] | 1992 [1] |
| 362S - 54 | 0.0566 | 0.0849 | 50 | 1433 | 2108 [1] | 2208 [1] | 2557 [1] | 2156 | 2750 [1] | 2838 [1] | 3144 [1] | 1022 | 1246 [1] | 1280 [1] | 1395 [1] | 2211 | 2695 [1] | 2767 [1] | 3017 [1] |
| 362S - 68 | 0.0713 | 0.1069 | 33 | 1414 | 2045 [1] | 2138 [1] | 2463 [1] | 2182 | 2737 [1] | 2819 [1] | 3105 [1] | 1096 | 1316 [1] | 1349 [1] | 1463 [1] | 2371 | 2847 [1] | 2918 [1] | 3163 [1] |
| 362S - 68 | 0.0713 | 0.1069 | 50 | 2143 | 3098 [1] | 3239 [1] | 3732 [1] | 3307 | 4147 [1] | 4271 [1] | 4705 [1] | 1661 | 1995 [1] | 2044 [1] | 2216 [1] | 3592 | 4314 [1] | 4421 [1] | 4793 [1] |
| 362S - 97 | 0.1017 | 0.1525 | 33 | 2641 | 3716 [1] | 3875 [1] | 4430 [1] | 4234 | 5180 [1] | 5320 [1] | 5809 [1] | 2292 | 2693 [1] | 2752 [1] | 2959 [1] | 4957 | 5823 [1] | 5952 [1] | 6399 [1] |
| 362S - 97 | 0.1017 | 0.1525 | 50 | 4001 | 5630 [1] | 5872 [1] | 6713 [1] | 6416 | 7849 [1] | 8061 [1] | 8801 [1] | 3473 | 4080 [1] | 4170 [1] | 4483 [1] | 7511 | 8823 [1] | 9018 [1] | 9695 [1] |
| 400S - 27 | 0.0283 | 0.0796 | 33 | 266 | 411 | 433 [1] | 507 [1,2] | 362 | 486 | 505 [1] | 569 [1,2] | 138 | 177 | 182 [1] | 202 [1,2] | 289 | 370 | 382 [1] | 424 [1,2] |
| 400S - 30 | 0.0312 | 0.0781 | 33 | 320 | 490 | 516 [1] | 604 [1] | 441 | 589 | 611 [1] | 687 [1] | 174 | 221 | 228 [1] | 252 [1] | 366 | 465 | 480 [1] | 531 [1] |
| 400S - 33 | 0.0346 | 0.0764 | 33 | 388 | 591 | 621 [1] | 726 [1] | 545 | 721 | 747 [1] | 838 [1] | 221 | 279 | 287 [1] | 317 [1] | 469 | 592 | 610 [1] | 673 [1] |
| 400S - 43 | 0.0451 | 0.0712 | 33 | 635 | 950 | 997 [1] | 1159 [1] | 930 | 1206 | 1247 [1] | 1390 [1] | 403 | 499 | 513 [1] | 563 [1] | 870 | 1077 | 1108 [1] | 1215 [1] |
| 400S - 54 | 0.0566 | 0.0849 | 33 | 946 | 1391 | 1457 [1] | 1687 [1] | 1422 | 1814 | 1872 [1] | 2074 [1] | 658 | 803 | 824 [1] | 899 [1] | 1424 | 1736 | 1782 [1] | 1943 [1] |
| 400S - 54 | 0.0566 | 0.0849 | 50 | 1433 | 2107 | 2207 [1] | 2556 [1] | 2155 | 2748 | 2836 [1] | 3143 [1] | 998 | 1216 | 1249 [1] | 1361 [1] | 2157 | 2630 | 2700 [1] | 2944 [1] |
| 400S - 68 | 0.0713 | 0.1069 | 33 | 1414 | 2044 | 2137 [1] | 2462 [1] | 2181 | 2736 | 2818 [1] | 3104 [1] | 1074 | 1289 | 1321 [1] | 1432 [1] | 2322 | 2788 | 2857 [1] | 3098 [1] |
| 400S - 68 | 0.0713 | 0.1069 | 50 | 2142 | 3097 | 3238 [1] | 3731 [1] | 3305 | 4145 | 4270 [1] | 4703 [1] | 1627 | 1953 | 2002 [1] | 2170 [1] | 3518 | 4224 | 4329 [1] | 4694 [1] |
| 400S - 97 | 0.1017 | 0.1525 | 33 | 2640 | 3715 | 3874 [1] | 4429 [1] | 4233 | 5178 | 5319 [1] | 5807 [1] | 2254 | 2648 | 2706 [1] | 2909 [1] | 4875 | 5726 | 5853 [1] | 6292 [1] |
| 400S - 97 | 0.1017 | 0.1525 | 50 | 4000 | 5628 | 5870 [1] | 6711 [1] | 6414 | 7846 | 8059 [1] | 8798 [1] | 3415 | 4012 | 4100 [1] | 4408 [1] | 7386 | 8676 | 8868 [1] | 9534 [1] |
| 550S - 27 | 0.0283 | 0.0796 | 33 | 266 | 410 | 432 | 506 [1,2] | 361 | 485 | 504 | 568 [1,2] | 116 | 149 | 154 | 171 [1,2] | 244 | 312 | 322 | 357 [1,2] |
| 550S - 30 | 0.0312 | 0.0781 | 33 | 319 | 489 | 515 | 603 [1] | 441 | 588 | 610 | 686 [1] | 149 | 189 | 195 | 216 [1] | 314 | 399 | 411 | 455 [1] |
| 550S - 33 | 0.0346 | 0.0764 | 33 | 387 | 590 | 620 | 724 [1] | 544 | 720 | 746 | 836 [1] | 192 | 242 | 250 | 276 [1] | 408 | 514 | 530 | 585 [1] |
| 550S - 43 | 0.0451 | 0.0712 | 33 | 634 | 948 | 995 | 1157 [1] | 928 | 1204 | 1245 | 1388 [1] | 361 | 447 | 459 | 504 [1] | 778 | 964 | 991 | 1087 [1] |
| 550S - 54 | 0.0566 | 0.0849 | 33 | 944 | 1389 | 1455 | 1684 [1] | 1420 | 1811 | 1869 | 2071 [1] | 600 | 732 | 751 | 819 [1] | 1298 | 1582 | 1624 | 1771 [1] |
| 550S - 54 | 0.0566 | 0.0849 | 50 | 1431 | 2104 | 2204 | 2552 [1] | 2152 | 2744 | 2832 | 3138 [1] | 909 | 1108 | 1138 | 1241 [1] | 1966 | 2397 | 2461 | 2683 [1] |

**1** Bearing length to web height ratio, N/h, exceeds limit of 2.0

**2** Bearing length to thickness ratio, N/t, exceeds limit of 210

See Web Crippling Load Table Notes

# Allowable Web Crippling Loads (lbs) - Back-to-Back Members

| Member | Design Thickness | Inside Radius | Yield Str | Condition 1 | | | | Condition 2 | | | | Condition 3 | | | | Condition 4 | | | |
|---|---|---|---|---|---|---|---|---|---|---|---|---|---|---|---|---|---|---|---|
| | | | | 1 | 3.5 | 4 | 6 | 1 | 3.5 | 4 | 6 | 1 | 3.5 | 4 | 6 | 1 | 3.5 | 4 | 6 |
| 550S - 68 | 0.0713 | 0.1069 | 33 | 1412 | 2041 | 2134 | 2459 [1] | 2179 | 2732 | 2814 | 3100 [1] | 993 | 1192 | 1222 | 1324 [1] | 2147 | 2578 | 2642 | 2864 [1] |
| 550S - 68 | 0.0713 | 0.1069 | 50 | 2139 | 3092 | 3234 | 3726 [1] | 3301 | 4139 | 4264 | 4697 [1] | 1504 | 1806 | 1851 | 2007 [1] | 3253 | 3906 | 4003 | 4340 [1] |
| 550S - 97 | 0.1017 | 0.1525 | 33 | 2637 | 3710 | 3870 | 4424 [1] | 4228 | 5172 | 5313 | 5800 [1] | 2119 | 2489 | 2544 | 2735 [1] | 4583 | 5383 | 5502 | 5915 [1] |
| 550S - 97 | 0.1017 | 0.1525 | 50 | 3995 | 5622 | 5863 | 6703 [1] | 6406 | 7837 | 8049 | 8788 [1] | 3211 | 3771 | 3855 | 4144 [1] | 6944 | 8157 | 8337 | 8963 [1] |
| 600S - 30 | 0.0312 | 0.0781 | 33 | 319 | 489 | 514 | 602 [1] | 440 | 587 | 609 | 685 [1] | 141 | 180 | 185 | 205 [1] | 298 | 379 | 391 | 433 [1] |
| 600S - 33 | 0.0346 | 0.0764 | 33 | 387 | 589 | 619 | 724 [1] | 543 | 719 | 745 | 836 [1] | 183 | 231 | 238 | 263 [1] | 389 | 491 | 506 | 559 [1] |
| 600S - 43 | 0.0451 | 0.0712 | 33 | 634 | 948 | 995 | 1157 [1] | 928 | 1204 | 1245 | 1387 [1] | 348 | 431 | 443 | 486 [1] | 751 | 930 | 956 | 1048 [1] |
| 600S - 54 | 0.0566 | 0.0849 | 33 | 944 | 1388 | 1454 | 1683 [1] | 1420 | 1810 | 1868 | 2070 [1] | 583 | 710 | 729 | 795 [1] | 1260 | 1536 | 1577 | 1719 [1] |
| 600S - 54 | 0.0566 | 0.0849 | 50 | 1430 | 2103 | 2203 | 2551 [1] | 2151 | 2743 | 2831 | 3136 [1] | 883 | 1076 | 1105 | 1205 [1] | 1909 | 2327 | 2389 | 2605 [1] |
| 600S - 68 | 0.0713 | 0.1069 | 33 | 1411 | 2040 | 2133 | 2458 [1] | 2178 | 2731 | 2813 | 3099 [1] | 968 | 1163 | 1192 | 1292 [1] | 2095 | 2515 | 2577 | 2794 [1] |
| 600S - 68 | 0.0713 | 0.1069 | 50 | 2138 | 3091 | 3233 | 3724 [1] | 3299 | 4138 | 4262 | 4695 [1] | 1467 | 1762 | 1806 | 1958 [1] | 3174 | 3811 | 3905 | 4234 [1] |
| 600S - 97 | 0.1017 | 0.1525 | 50 | 3994 | 5620 | 5861 | 6701 [1] | 6404 | 7834 | 8046 | 8785 [1] | 3150 | 3700 | 3781 | 4065 [1] | 6812 | 8002 | 8178 | 8792 [1] |
| 600S - 118 | 0.1242 | 0.1863 | 50 | 5696 | 7892 | 8218 | 9351 [1] | 9325 | 11257 | 11543 | 12540 [1] | 4808 | 5583 | 5698 | 6097 [1] | 10398 | 12074 | 12322 | 13187 [1] |
| 800S - 43 | 0.0451 | 0.0712 | 33 | 633 | 946 | 993 | 1154 | 926 | 1202 | 1242 | 1384 | 302 | 374 | 384 | 421 | 651 | 806 | 829 | 909 |
| 800S - 54 | 0.0566 | 0.0849 | 33 | 942 | 1386 | 1452 | 1681 | 1417 | 1807 | 1865 | 2067 | 519 | 633 | 650 | 709 | 1123 | 1369 | 1405 | 1532 |
| 800S - 54 | 0.0566 | 0.0849 | 50 | 1428 | 2100 | 2200 | 2546 | 2147 | 2738 | 2826 | 3131 | 787 | 959 | 985 | 1074 | 1701 | 2074 | 2129 | 2322 |
| 800S - 68 | 0.0713 | 0.1069 | 33 | 1409 | 2037 | 2130 | 2455 | 2174 | 2727 | 2809 | 3094 | 881 | 1058 | 1084 | 1175 | 1905 | 2287 | 2344 | 2542 |
| 800S - 68 | 0.0713 | 0.1069 | 50 | 2135 | 3087 | 3228 | 3719 | 3295 | 4132 | 4256 | 4688 | 1335 | 1602 | 1642 | 1781 | 2886 | 3466 | 3552 | 3851 |
| 800S - 97 | 0.1017 | 0.1525 | 50 | 3989 | 5613 | 5854 | 6692 | 6396 | 7825 | 8036 | 8774 | 2929 | 3441 | 3517 | 3781 | 6335 | 7442 | 7606 | 8177 |
| 800S - 118 | 0.1242 | 0.1863 | 50 | 5690 | 7883 | 8209 | 9341 | 9314 | 11244 | 11530 | 12526 | 4514 | 5241 | 5349 | 5724 | 9762 | 11335 | 11568 | 12380 |
| 1000S - 54 | 0.0566 | 0.0849 | 33 | 941 | 1384 | 1450 | 1678 | 1415 | 1805 | 1863 | 2064 | 464 | 565 | 580 | 633 | 1003 | 1222 | 1255 | 1368 |
| 1000S - 54 | 0.0566 | 0.0849 | 50 | 1426 | 2097 | 2196 | 2543 | 2144 | 2735 | 2822 | 3127 | 702 | 856 | 879 | 959 | 1519 | 1852 | 1901 | 2073 |
| 1000S - 68 | 0.0713 | 0.1069 | 33 | 1407 | 2035 | 2128 | 2451 | 2172 | 2723 | 2805 | 3090 | 804 | 965 | 989 | 1073 | 1739 | 2088 | 2140 | 2320 |
| 1000S - 68 | 0.0713 | 0.1069 | 50 | 2132 | 3083 | 3224 | 3714 | 3290 | 4126 | 4250 | 4682 | 1218 | 1463 | 1499 | 1625 | 2635 | 3164 | 3242 | 3515 |
| 1000S - 97 | 0.1017 | 0.1525 | 50 | 3985 | 5607 | 5848 | 6685 | 6389 | 7816 | 8028 | 8764 | 2737 | 3215 | 3286 | 3533 | 5920 | 6953 | 7107 | 7640 |
| 1000S - 118 | 0.1242 | 0.1863 | 50 | 5684 | 7875 | 8200 | 9332 | 9305 | 11233 | 11519 | 12514 | 4257 | 4943 | 5045 | 5399 | 9208 | 10691 | 10911 | 11677 |
| 1200S - 68 | 0.0713 | 0.1069 | 33 | 1406 | 2032 | 2125 | 2449 | 2169 | 2720 | 2802 | 3086 | 735 | 883 | 904 | 981 | 1590 | 1909 | 1956 | 2121 |
| 1200S - 68 | 0.0713 | 0.1069 | 50 | 2130 | 3079 | 3220 | 3710 | 3287 | 4122 | 4245 | 4676 | 1114 | 1337 | 1370 | 1486 | 2408 | 2892 | 2964 | 3213 |
| 1200S - 97 | 0.1017 | 0.1525 | 50 | 3981 | 5601 | 5842 | 6678 | 6383 | 7808 | 8020 | 8756 | 2564 | 3012 | 3078 | 3309 | 5545 | 6514 | 6658 | 7158 |
| 1200S - 118 | 0.1242 | 0.1863 | 50 | 5679 | 7868 | 8193 | 9323 | 9297 | 11223 | 11508 | 12503 | 4027 | 4676 | 4772 | 5107 | 8710 | 10113 | 10321 | 11046 |
| 1400S - 68 | 0.0713 | 0.1069 | 33 | 1404 | 2030 | 2123 | 2446 | 2167 | 2717 | 2799 | 3083 | 672 | 806 | 826 | 896 | 1452 | 1744 | 1787 | 1938 |
| 1400S - 68 | 0.0713 | 0.1069 | 50 | 2127 | 3076 | 3216 | 3706 | 3283 | 4117 | 4241 | 4671 | 1018 | 1222 | 1252 | 1358 | 2201 | 2642 | 2708 | 2936 |
| 1400S - 97 | 0.1017 | 0.1525 | 50 | 3977 | 5596 | 5837 | 6672 | 6377 | 7801 | 8013 | 8748 | 2406 | 2826 | 2888 | 3105 | 5203 | 6111 | 6246 | 6715 |
| 1400S - 118 | 0.1242 | 0.1863 | 50 | 5674 | 7862 | 8186 | 9316 | 9289 | 11214 | 11499 | 12492 | 3817 | 4432 | 4523 | 4840 | 8254 | 9584 | 9781 | 10468 |
| 1600S - 97 | 0.1017 | 0.1525 | 50 | 3974 | 5592 | 5832 | 6667 | 6372 | 7795 | 8006 | 8741 | 2259 | 2653 | 2712 | 2915 | 4885 | 5738 | 5864 | 6305 |
| 1600S - 118 | 0.1242 | 0.1863 | 50 | 5670 | 7856 | 8180 | 9309 | 9282 | 11205 | 11490 | 12483 | 3621 | 4205 | 4291 | 4592 | 7832 | 9093 | 9281 | 9932 |

**1** Bearing length to web height ratio, N/h, exceeds limit of 2.0

**2** Bearing length to thickness ratio, N/t, exceeds limit of 210

See Web Crippling Load Table Notes

# Channel Properties

## U-Channel Section Properties

| Section | Design Thickness (in) | Yield Strength, Fy (ksi) | Area ($in^2$) | Weight (lb/ft) | Ix ($in^4$) | Rx (in) | Iy ($in^4$) | Ry (in) | Ix ($in^4$) | Sx ($in^3$) | Ma (in-k) | Va (lb) |
|---|---|---|---|---|---|---|---|---|---|---|---|---|
| 075U050-54 | 0.0566 | 33 | 0.087 | 0.296 | 0.007 | 0.289 | 0.002 | 0.156 | 0.007 | 0.019 | 0.459 | 327 |
| 150U050-54 | 0.0566 | 33 | 0.130 | 0.441 | 0.039 | 0.549 | 0.003 | 0.146 | 0.039 | 0.052 | 1.230 | 852 |
| 200U050-54 | 0.0566 | 33 | 0.158 | 0.537 | 0.080 | 0.711 | 0.003 | 0.137 | 0.080 | 0.080 | 1.883 | 1203 |
| 250U050-54 | 0.0566 | 33 | 0.186 | 0.633 | 0.140 | 0.868 | 0.003 | 0.130 | 0.140 | 0.112 | 2.648 | 1553 |

1 Calculated properties are based on AISI S100-16/S2-20, *North American Specification for Design of Cold-Formed Steel Structural Members*.
2 Minimum base metal thickness is 95% of design thickness.
3 Effective properties are based on Fy=33ksi.

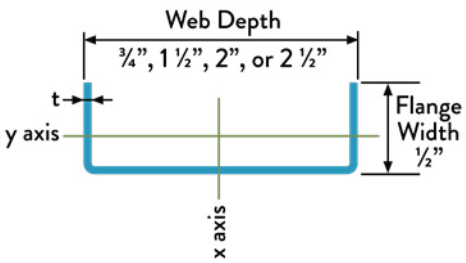


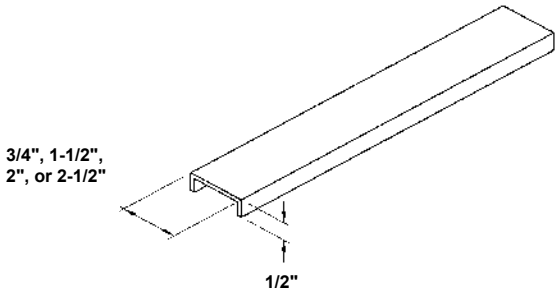


## U-Channel Allowable Ceiling Spans L/360

| Section | Spans | 4 psf Channel Spacing (in) o.c. | | | | | 6 psf Channel Spacing (in) o.c. | | | | | 13 psf Channel Spacing (in) o.c. | | | | | 15 psf Channel Spacing (in) o.c. | | | | |
|---|---|---|---|---|---|---|---|---|---|---|---|---|---|---|---|---|---|---|---|---|---|
| | | 24 | 36 | 48 | 60 | 72 | 24 | 36 | 48 | 60 | 72 | 24 | 36 | 48 | 60 | 72 | 24 | 36 | 48 | 60 | 72 |
| 075U050-54 | Single | 3' 5" | 3' 0" | 2' 9" | 2' 6" | 2' 4" | 3' 0" | 2' 7" | 2' 4" | 2' 2" | 2' 1" | 2' 4" | 2' 0" | 1' 10" | 1' 8" | 1' 7" | 2' 2" | 1' 11" | 1' 9" | 1' 7" | 1' 6" |
| | Multiple | 4' 2" | 3' 8" | 3' 4" | 3' 1" | 2' 11" | 3' 8" | 3' 2" | 2' 11" | 2' 8" | 2' 7" | 2' 10" | 2' 6" | 2' 3" | 2' 1" | 1' 11" | 2' 8" | 2' 4" | 2' 2" | 2' 0" | 1' 9" |
| 150U050-54 | Single | 5' 6" | 4' 10" | 4' 5" | 4' 1" | 3' 10" | 4' 10" | 4' 3" | 3' 10" | 3' 7" | 3' 5" | 3' 9" | 3' 4" | 3' 0" | 2' 9" | 2' 7" | 3' 7" | 3' 2" | 2' 10" | 2' 7" | 2' 5" |
| | Multiple | 7' 1" | 6' 2" | 5' 8" | 5' 3" | 4' 11" | 6' 2" | 5' 5" | 4' 11" | 4' 7" | 4' 4" | 4' 10" | 4' 2" | 3' 9" | 3' 4" | 3' 0" | 4' 7" | 4' 0" | 3' 6" | 3' 1" | 2' 9" |
| 200U050-54 | Single | 5' 10" | 5' 1" | 4' 8" | 4' 4" | 4' 1" | 5' 1" | 4' 6" | 4' 1" | 3' 10" | 3' 7" | 4' 0" | 3' 6" | 3' 2" | 3' 0" | 2' 10" | 3' 10" | 3' 4" | 3' 1" | 2' 10" | 2' 8" |
| | Multiple | 7' 5" | 6' 6" | 5' 11" | 5' 6" | 5' 2" | 6' 6" | 5' 8" | 5' 2" | 4' 10" | 4' 7" | 5' 1" | 4' 5" | 4' 0" | 3' 9" | 3' 6" | 4' 10" | 4' 3" | 3' 10" | 3' 7" | 3' 2" |
| 250U050-54 | Single | 6' 1" | 5' 4" | 4' 10" | 4' 6" | 4' 3" | 5' 4" | 4' 8" | 4' 3" | 4' 0" | 3' 9" | 4' 2" | 3' 8" | 3' 4" | 3' 1" | 2' 11" | 4' 0" | 3' 6" | 3' 2" | 3' 0" | 2' 10" |
| | Multiple | 7' 9" | 6' 9" | 6' 2" | 5' 9" | 5' 5" | 6' 9" | 5' 11" | 5' 5" | 5' 0" | 4' 9" | 5' 3" | 4' 7" | 4' 3" | 3' 11" | 3' 9" | 5' 0" | 4' 5" | 4' 0" | 3' 9" | 3' 7" |

## U-Channel Allowable Ceiling Spans L/240

| Section | Spans | 4 psf Channel Spacing (in) o.c. | | | | | 6 psf Channel Spacing (in) o.c. | | | | | 13 psf Channel Spacing (in) o.c. | | | | | 15 psf Channel Spacing (in) o.c. | | | | |
|---|---|---|---|---|---|---|---|---|---|---|---|---|---|---|---|---|---|---|---|---|---|
| | | 24 | 36 | 48 | 60 | 72 | 24 | 36 | 48 | 60 | 72 | 24 | 36 | 48 | 60 | 72 | 24 | 36 | 48 | 60 | 72 |
| 075U050-54 | Single | 3' 11" | 3' 5" | 3' 1" | 2' 11" | 2' 9" | 3' 5" | 3' 0" | 2' 9" | 2' 6" | 2' 4" | 2' 8" | 2' 4" | 2' 1" | 1' 11" | 1' 9" | 2' 6" | 2' 2" | 2' 0" | 1' 10" | 1' 8" |
| | Multiple | 4' 10" | 4' 2" | 3' 10" | 3' 7" | 3' 4" | 4' 2" | 3' 8" | 3' 4" | 3' 1" | 2' 10" | 3' 3" | 2' 9" | 2' 4" | 2' 1" | 1' 11" | 3' 1" | 2' 7" | 2' 2" | 2' 0" | 1' 9" |
| 150U050-54 | Single | 5' 6" | 4' 10" | 4' 5" | 4' 1" | 3' 10" | 4' 10" | 4' 3" | 3' 10" | 3' 7" | 3' 5" | 3' 9" | 3' 4" | 3' 0" | 2' 9" | 2' 7" | 3' 7" | 3' 2" | 2' 10" | 2' 7" | 2' 5" |
| | Multiple | 7' 1" | 6' 2" | 5' 8" | 5' 3" | 4' 11" | 6' 2" | 5' 5" | 4' 11" | 4' 7" | 4' 4" | 4' 10" | 4' 2" | 3' 9" | 3' 4" | 3' 0" | 4' 7" | 4' 0" | 3' 6" | 3' 1" | 2' 9" |
| 200U050-54 | Single | 5' 10" | 5' 1" | 4' 8" | 4' 4" | 4' 1" | 5' 1" | 4' 6" | 4' 1" | 3' 10" | 3' 7" | 4' 0" | 3' 6" | 3' 2" | 3' 0" | 2' 10" | 3' 10" | 3' 4" | 3' 1" | 2' 10" | 2' 8" |
| | Multiple | 7' 5" | 6' 6" | 5' 11" | 5' 6" | 5' 2" | 6' 6" | 5' 8" | 5' 2" | 4' 10" | 4' 7" | 5' 1" | 4' 5" | 4' 0" | 3' 9" | 3' 6" | 4' 10" | 4' 3" | 3' 10" | 3' 7" | 3' 2" |
| 250U050-54 | Single | 6' 1" | 5' 4" | 4' 10" | 4' 6" | 4' 3" | 5' 4" | 4' 8" | 4' 3" | 4' 0" | 3' 9" | 4' 2" | 3' 8" | 3' 4" | 3' 1" | 2' 11" | 4' 0" | 3' 6" | 3' 2" | 3' 0" | 2' 10" |
| | Multiple | 7' 9" | 6' 9" | 6' 2" | 5' 9" | 5' 5" | 6' 9" | 5' 11" | 5' 5" | 5' 0" | 4' 9" | 5' 3" | 4' 7" | 4' 3" | 3' 11" | 3' 9" | 5' 0" | 4' 5" | 4' 0" | 3' 9" | 3' 7" |

1 Allowable ceiling spans are based on effective properties.
2 Multiple span indicates two or more equal spans with channel continuous over center support.
3 Bearing length = 0.75-inches.
4 Table values are based on the compression flange laterally unsupported.

# U-Channel Allowable Ceiling Spans L/120

| Section | Spans | 4 psf Channel Spacing (in) o.c. | | | | | 6 psf Channel Spacing (in) o.c. | | | | | 13 psf Channel Spacing (in) o.c. | | | | | 15 psf Channel Spacing (in) o.c. | | | | |
|---|---|---|---|---|---|---|---|---|---|---|---|---|---|---|---|---|---|---|---|---|---|
| | | 24 | 36 | 48 | 60 | 72 | 24 | 36 | 48 | 60 | 72 | 24 | 36 | 48 | 60 | 72 | 24 | 36 | 48 | 60 | 72 |
| 075U050-54 | Single | 4' 10" | 4' 1" | 3' 7" | 3' 3" | 3' 0" | 4' 1" | 3' 5" | 3' 0" | 2' 9" | 2' 6" | 2' 11" | 2' 5" | 2' 2" | 1' 11" | 1' 9" | 2' 9" | 2' 4" | 2' 0" | 1' 10" | 1' 8" |
| | Multiple | 5' 5" | 4' 6" | 4' 2" | 3' 10" | 3' 5" | 4' 6" | 3' 11" | 3' 5" | 3' 2" | 2' 11" | 3' 5" | 2' 9" | 2' 4" | 2' 1" | 1' 11" | 3' 1" | 2' 7" | 2' 2" | 2' 0" | 1' 9" |
| 150U050-54 | Single | 5' 6" | 4' 10" | 4' 5" | 4' 1" | 3' 10" | 4' 10" | 4' 3" | 3' 10" | 3' 7" | 3' 5" | 3' 9" | 3' 4" | 3' 0" | 2' 9" | 2' 7" | 3' 7" | 3' 2" | 2' 10" | 2' 7" | 2' 5" |
| | Multiple | 7' 1" | 6' 2" | 5' 8" | 5' 3" | 4' 11" | 6' 2" | 5' 5" | 4' 11" | 4' 7" | 4' 4" | 4' 10" | 4' 2" | 3' 9" | 3' 4" | 3' 0" | 4' 7" | 4' 0" | 3' 6" | 3' 1" | 2' 9" |
| 200U050-54 | Single | 5' 10" | 5' 1" | 4' 8" | 4' 4" | 4' 1" | 5' 1" | 4' 6" | 4' 1" | 3' 10" | 3' 7" | 4' 0" | 3' 6" | 3' 2" | 3' 0" | 2' 10" | 3' 10" | 3' 4" | 3' 1" | 2' 10" | 2' 8" |
| | Multiple | 7' 5" | 6' 6" | 5' 11" | 5' 6" | 5' 2" | 6' 6" | 5' 8" | 5' 2" | 4' 10" | 4' 7" | 5' 1" | 4' 5" | 4' 0" | 3' 9" | 3' 6" | 4' 10" | 4' 3" | 3' 10" | 3' 7" | 3' 2" |
| 250U050-54 | Single | 6' 1" | 5' 4" | 4' 10" | 4' 6" | 4' 3" | 5' 4" | 4' 8" | 4' 3" | 4' 0" | 3' 9" | 4' 2" | 3' 8" | 3' 4" | 3' 1" | 2' 11" | 4' 0" | 3' 6" | 3' 2" | 3' 0" | 2' 10" |
| | Multiple | 7' 9" | 6' 9" | 6' 2" | 5' 9" | 5' 5" | 6' 9" | 5' 11" | 5' 5" | 5' 0" | 4' 9" | 5' 3" | 4' 7" | 4' 3" | 3' 11" | 3' 9" | 5' 0" | 4' 5" | 4' 0" | 3' 9" | 3' 7" |

1 Allowable ceiling spans are based on effective properties.
2 Multiple span indicates two or more equal spans with channel continuous over center support.
3 Bearing length = 0.75-inches.
4 Table values are based on the compression flange laterally unsupported.



# (Hat) Furring (F) Channel Section Properties

| Section | Design Thickness (in) | Yield Strength, Fy (ksi) | Area ($in^2$) | Weight (lb/ft) | Ix ($in^4$) | Rx (in) | Iy ($in^4$) | Ry (in) | Ix ($in^4$) | Sx ($in^3$) | Ma (ft-lb) | Va (lb) |
|---|---|---|---|---|---|---|---|---|---|---|---|---|
| 087F125-18 | 0.0188 | 33 | 0.072 | 0.244 | 0.009 | 0.354 | 0.035 | 0.698 | 0.008 | 0.016 | 26.61 | 255 |
| 087F125-27 | 0.0283 | 33 | 0.107 | 0.365 | 0.013 | 0.351 | 0.051 | 0.693 | 0.013 | 0.027 | 45.20 | 381 |
| 087F125-30 | 0.0312 | 33 | 0.118 | 0.401 | 0.014 | 0.350 | 0.056 | 0.691 | 0.014 | 0.031 | 50.98 | 420 |
| 087F125-33 | 0.0346 | 33 | 0.130 | 0.443 | 0.016 | 0.349 | 0.062 | 0.689 | 0.016 | 0.034 | 56.23 | 464 |
| 087F125-43 | 0.0451 | 33 | 0.168 | 0.572 | 0.020 | 0.345 | 0.079 | 0.684 | 0.020 | 0.043 | 71.00 | 599 |
| 150F125-18 | 0.0188 | 33 | 0.095 | 0.324 | 0.031 | 0.572 | 0.052 | 0.742 | 0.029 | 0.034 | 56.73 | 261 |
| 150F125-27 | 0.0283 | 33 | 0.143 | 0.485 | 0.046 | 0.569 | 0.077 | 0.737 | 0.046 | 0.057 | 94.22 | 390 |
| 150F125-30 | 0.0312 | 33 | 0.157 | 0.534 | 0.051 | 0.568 | 0.085 | 0.735 | 0.050 | 0.064 | 105.92 | 429 |
| 150F125-33 | 0.0346 | 33 | 0.174 | 0.590 | 0.056 | 0.566 | 0.093 | 0.733 | 0.056 | 0.071 | 117.31 | 474 |
| 150F125-43 | 0.0451 | 33 | 0.225 | 0.764 | 0.071 | 0.563 | 0.119 | 0.728 | 0.071 | 0.091 | 149.70 | 613 |

**1** Calculated properties are based on AISI S100-16/S2-20, *North American Specification for Design of Cold-Formed Steel Structural Members*.

**2** Minimum base metal thickness is 95% of design thickness. Design thickness used for determination of properties.

**3** Effective properties are based on Fy=33ksi. For deflection calculations, use effective Ix. Effective Ix is based on Procedure 1 of NASPEC.

**4** Effective properties are given as the minimum value for positive or negative bending.

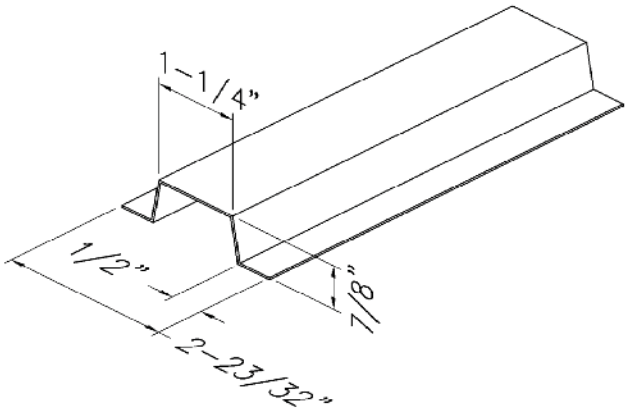


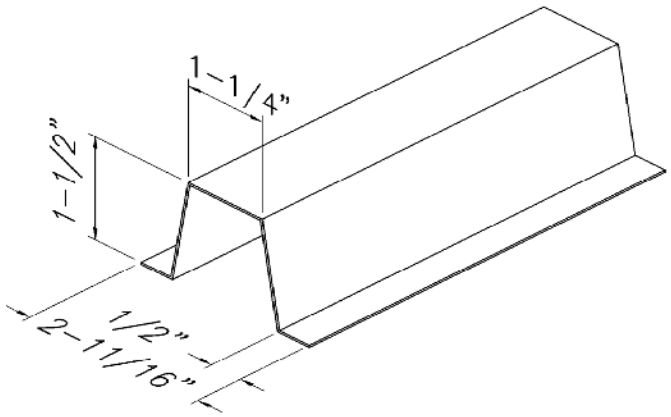


# (Hat) Furring (F) Channel Allowable Ceiling Spans L/360

| Section | Yield Strength, Fy (ksi) | Spans | 4 psf Channel Spacing (in) o.c. | | | 6 psf Channel Spacing (in) o.c. | | | 13 psf Channel Spacing (in) o.c. | | |
|---|---|---|---|---|---|---|---|---|---|---|---|
| | | | 12 | 16 | 24 | 12 | 16 | 24 | 12 | 16 | 24 |
| 087F125-18 | 33 | Single | 4' 5'' | 4' 0'' | 3' 6'' | 3' 10'' | 3' 6'' | 3' 1'' | 3' 0'' | 2' 9'' | 2' 5'' |
| | | Multiple | 5' 6'' | 5' 0'' | 4' 4'' | 4' 9'' | 4' 4'' | 3' 10'' | 3' 8'' | 3' 4'' | 2' 10'' |
| 087F125-27 | 33 | Single | 5' 3'' | 4' 9'' | 4' 2'' | 4' 7'' | 4' 2'' | 3' 8'' | 3' 6'' | 3' 3'' | 2' 10'' |
| | | Multiple | 6' 6'' | 5' 11'' | 5' 2'' | 5' 8'' | 5' 2'' | 4' 6'' | 4' 4'' | 4' 0'' | 3' 6'' |
| 087F125-30 | 33 | Single | 5' 5'' | 4' 11'' | 4' 3'' | 4' 9'' | 4' 3'' | 3' 9'' | 3' 8'' | 3' 4'' | 2' 11'' |
| | | Multiple | 6' 8'' | 6' 1'' | 5' 3'' | 5' 10'' | 5' 3'' | 4' 7'' | 4' 6'' | 4' 1'' | 3' 7'' |
| 087F125-33 | 33 | Single | 5' 7'' | 5' 1'' | 4' 5'' | 4' 10'' | 4' 5'' | 3' 10'' | 3' 9'' | 3' 5'' | 3' 0'' |
| | | Multiple | 6' 11'' | 6' 3'' | 5' 6'' | 6' 0'' | 5' 6'' | 4' 9'' | 4' 8'' | 4' 3'' | 3' 8'' |
| 087F125-43 | 33 | Single | 6' 0'' | 5' 6'' | 4' 9'' | 5' 3'' | 4' 9'' | 4' 2'' | 4' 1'' | 3' 8'' | 3' 3'' |
| | | Multiple | 7' 5'' | 6' 9'' | 5' 11'' | 6' 6'' | 5' 11'' | 5' 2'' | 5' 0'' | 4' 7'' | 4' 0'' |
| 150F125-18 | 33 | Single | 6' 10'' | 6' 2'' | 5' 5'' | 5' 11'' | 5' 5'' | 4' 9'' | 4' 7'' | 4' 2'' | 3' 8'' |
| | | Multiple | 8' 5'' | 7' 8'' | 6' 8'' | 7' 4'' | 6' 8'' | 5' 10'' | 5' 8'' | 4' 9'' | 3' 8'' |
| 150F125-27 | 33 | Single | 7' 11'' | 7' 3'' | 6' 4'' | 6' 11'' | 6' 4'' | 5' 6'' | 5' 4'' | 4' 11'' | 4' 3'' |
| | | Multiple | 9' 10'' | 8' 11'' | 7' 10'' | 8' 7'' | 7' 10'' | 6' 10'' | 6' 8'' | 6' 0'' | 5' 3'' |
| 150F125-30 | 33 | Single | 8' 2'' | 7' 5'' | 6' 6'' | 7' 2'' | 6' 6'' | 5' 8'' | 5' 6'' | 5' 0'' | 4' 5'' |
| | | Multiple | 10' 1'' | 9' 2'' | 8' 0'' | 8' 10'' | 8' 0'' | 7' 0'' | 6' 10'' | 6' 3'' | 5' 5'' |
| 150F125-33 | 33 | Single | 8' 6'' | 7' 8'' | 6' 9'' | 7' 5'' | 6' 9'' | 5' 10'' | 5' 9'' | 5' 2'' | 4' 6'' |
| | | Multiple | 10' 6'' | 9' 6'' | 8' 4'' | 9' 2'' | 8' 4'' | 7' 3'' | 7' 1'' | 6' 5'' | 5' 7'' |
| 150F125-43 | 33 | Single | 9' 2'' | 8' 4'' | 7' 4'' | 8' 0'' | 7' 4'' | 6' 4'' | 6' 2'' | 5' 8'' | 4' 11'' |
| | | Multiple | 11' 4'' | 10' 4'' | 9' 0'' | 9' 11'' | 9' 0'' | 7' 11'' | 7' 8'' | 7' 0'' | 6' 1'' |

**1** Allowable ceiling spans are based on effective properties.

**2** Multiple span indicates two or more equal spans with channel continuous over center support.

**3** Bearing length = 0.75-inches.

## (Hat) Furring (F) Channel Allowable Ceiling Spans L/260

| Section | Yield Strength, Fy (ksi) | Spans | 4 psf Channel Spacing (in) o.c. | | | 6 psf Channel Spacing (in) o.c. | | | 13 psf Channel Spacing (in) o.c. | | |
|---|---|---|---|---|---|---|---|---|---|---|---|
| | | | 12 | 16 | 24 | 12 | 16 | 24 | 12 | 16 | 24 |
| 087F125-18 | 33 | Single | 5' 1'' | 4' 7'' | 4' 0'' | 4' 5'' | 4' 0'' | 3' 6'' | 3' 5'' | 3' 1'' | 2' 9'' |
| | | Multiple | 6' 3'' | 5' 8'' | 5' 0'' | 5' 6'' | 5' 0'' | 4' 3'' | 4' 1'' | 3' 6'' | 2' 10'' |
| 087F125-27 | 33 | Single | 6' 0'' | 5' 5'' | 4' 9'' | 5' 3'' | 4' 9'' | 4' 2'' | 4' 1'' | 3' 8'' | 3' 3'' |
| | | Multiple | 7' 5'' | 6' 9'' | 5' 11'' | 6' 6'' | 5' 11'' | 5' 2'' | 5' 0'' | 4' 7'' | 3' 9'' |
| 087F125-30 | 33 | Single | 6' 2'' | 5' 7'' | 4' 11'' | 5' 5'' | 4' 11'' | 4' 3'' | 4' 2'' | 3' 9'' | 3' 4'' |
| | | Multiple | 7' 8'' | 6' 11'' | 6' 1'' | 6' 8'' | 6' 1'' | 5' 3'' | 5' 2'' | 4' 8'' | 4' 0'' |
| 087F125-33 | 33 | Single | 6' 5'' | 5' 10'' | 5' 1'' | 5' 7'' | 5' 1'' | 4' 5'' | 4' 4'' | 3' 11'' | 3' 5'' |
| | | Multiple | 7' 11'' | 7' 2'' | 6' 3'' | 6' 11'' | 6' 3'' | 5' 6'' | 5' 4'' | 4' 10'' | 4' 2'' |
| 087F125-43 | 33 | Single | 6' 11'' | 6' 3'' | 5' 6'' | 6' 0'' | 5' 6'' | 4' 9'' | 4' 8'' | 4' 3'' | 3' 8'' |
| | | Multiple | 8' 6'' | 7' 9'' | 6' 9'' | 7' 5'' | 6' 9'' | 5' 11'' | 5' 9'' | 5' 3'' | 4' 7'' |
| 150F125-18 | 33 | Single | 7' 10'' | 7' 1'' | 6' 2'' | 6' 10'' | 6' 2'' | 5' 5'' | 5' 3'' | 4' 9'' | 4' 2'' |
| | | Multiple | 9' 8'' | 8' 9'' | 7' 6'' | 8' 5'' | 7' 6'' | 6' 2'' | 5' 10'' | 4' 9'' | 3' 8'' |
| 150F125-27 | 33 | Single | 9' 1'' | 8' 3'' | 7' 3'' | 7' 11'' | 7' 3'' | 6' 4'' | 6' 2'' | 5' 7'' | 4' 11'' |
| | | Multiple | 11' 3'' | 10' 3'' | 8' 11'' | 9' 10'' | 8' 11'' | 7' 10'' | 7' 7'' | 6' 7'' | 5' 5'' |
| 150F125-30 | 33 | Single | 9' 5'' | 8' 6'' | 7' 5'' | 8' 2'' | 7' 5'' | 6' 6'' | 6' 4'' | 5' 9'' | 5' 0'' |
| | | Multiple | 11' 7'' | 10' 6'' | 9' 2'' | 10' 1'' | 9' 2'' | 8' 0'' | 7' 10'' | 7' 0'' | 5' 9'' |
| 150F125-33 | 33 | Single | 9' 8'' | 8' 10'' | 7' 8'' | 8' 6'' | 7' 8'' | 6' 9'' | 6' 7'' | 5' 11'' | 5' 2'' |
| | | Multiple | 12' 0'' | 10' 11'' | 9' 6'' | 10' 6'' | 9' 6'' | 8' 4'' | 8' 1'' | 7' 4'' | 6' 0'' |
| 150F125-43 | 33 | Single | 10' 6'' | 9' 7'' | 8' 4'' | 9' 2'' | 8' 4'' | 7' 4'' | 7' 1'' | 6' 5'' | 5' 8'' |
| | | Multiple | 13' 0'' | 11' 10'' | 10' 4'' | 11' 4'' | 10' 4'' | 9' 0'' | 8' 9'' | 8' 0'' | 6' 9'' |

## (Hat) Furring (F) Channel Allowable Ceiling Spans L/120

| Section | Yield Strength, Fy (ksi) | Spans | 4 psf Channel Spacing (in) o.c. | | | 6 psf Channel Spacing (in) o.c. | | | 13 psf Channel Spacing (in) o.c. | | |
|---|---|---|---|---|---|---|---|---|---|---|---|
| | | | 12 | 16 | 24 | 12 | 16 | 24 | 12 | 16 | 24 |
| 087F125-18 | 33 | Single | 6' 5'' | 5' 10'' | 5' 1'' | 5' 7'' | 5' 1'' | 4' 5'' | 4' 4'' | 3' 11'' | 3' 5'' |
| | | Multiple | 7' 4'' | 6' 4'' | 5' 1'' | 5' 11'' | 5' 2'' | 4' 2'' | 4' 1'' | 3' 6'' | 2' 10'' |
| 087F125-27 | 33 | Single | 7' 7'' | 6' 10'' | 6' 0'' | 6' 7'' | 6' 0'' | 5' 3'' | 5' 1'' | 4' 8'' | 4' 1'' |
| | | Multiple | 9' 4'' | 8' 3'' | 6' 8'' | 7' 9'' | 6' 9'' | 5' 5'' | 5' 3'' | 4' 7'' | 3' 8'' |
| 087F125-30 | 33 | Single | 7' 9'' | 7' 1'' | 6' 2'' | 6' 10'' | 6' 2'' | 5' 5'' | 5' 3'' | 4' 9'' | 4' 2'' |
| | | Multiple | 9' 7'' | 8' 9'' | 7' 1'' | 8' 3'' | 7' 2'' | 5' 9'' | 5' 7'' | 4' 10'' | 3' 11'' |
| 087F125-33 | 33 | Single | 8' 0'' | 7' 4'' | 6' 5'' | 7' 0'' | 6' 5'' | 5' 7'' | 5' 5'' | 4' 11'' | 4' 4'' |
| | | Multiple | 9' 11'' | 9' 0'' | 7' 5'' | 8' 8'' | 7' 6'' | 6' 1'' | 5' 11'' | 5' 1'' | 4' 1'' |
| 087F125-43 | 33 | Single | 8' 8'' | 7' 11'' | 6' 11'' | 7' 7'' | 6' 11'' | 6' 0'' | 5' 10'' | 5' 4'' | 4' 8'' |
| | | Multiple | 10' 9'' | 9' 9'' | 8' 5'' | 9' 5'' | 8' 5'' | 6' 10'' | 6' 7'' | 5' 9'' | 4' 8'' |
| 150F125-18 | 33 | Single | 9' 10'' | 8' 11'' | 7' 10'' | 8' 7'' | 7' 10'' | 6' 10'' | 6' 8'' | 6' 0'' | 5' 3'' |
| | | Multiple | 10' 8'' | 9' 3'' | 7' 6'' | 8' 8'' | 7' 6'' | 6' 1'' | 5' 10'' | 4' 5'' | 2' 11'' |
| 150F125-27 | 33 | Single | 11' 6'' | 10' 5'' | 9' 1'' | 10' 0'' | 9' 1'' | 7' 11'' | 7' 9'' | 7' 0'' | 6' 2'' |
| | | Multiple | 13' 9'' | 11' 11'' | 9' 8'' | 11' 2'' | 9' 8'' | 7' 11'' | 7' 7'' | 6' 7'' | 5' 4'' |
| 150F125-30 | 33 | Single | 11' 10'' | 10' 9'' | 9' 5'' | 10' 4'' | 9' 5'' | 8' 2'' | 8' 0'' | 7' 3'' | 6' 4'' |
| | | Multiple | 14' 7'' | 12' 7'' | 10' 3'' | 11' 11'' | 10' 3'' | 8' 4'' | 8' 1'' | 7' 0'' | 5' 8'' |
| 150F125-33 | 33 | Single | 12' 3'' | 11' 1'' | 9' 8'' | 10' 8'' | 9' 8'' | 8' 6'' | 8' 3'' | 7' 6'' | 6' 7'' |
| | | Multiple | 15' 1'' | 13' 3'' | 10' 9'' | 12' 6'' | 10' 10'' | 8' 10'' | 8' 6'' | 7' 4'' | 6' 0'' |
| 150F125-43 | 33 | Single | 13' 3'' | 12' 1'' | 10' 6'' | 11' 7'' | 10' 6'' | 9' 2'' | 8' 11'' | 8' 2'' | 7' 1'' |
| | | Multiple | 16' 5'' | 14' 11'' | 12' 2'' | 14' 2'' | 12' 3'' | 9' 11'' | 9' 7'' | 8' 4'' | 6' 9'' |

**1** Single spans taken as the minimum span based on moment, shear, web crippling or deflection.

**2** Multiple span indicates two or more equal, continuous spans with span length measured support to support.

**3** Multiple spans taken as minimum span based on moment, shear, web crippling, deflection combined bending and shear or combined bending and web crippling.

**4** Web crippling values based on 1-inch bearing at end and interior supports.

# Fasteners (Screws and Welds)

## Screw Table Notes

1. Allowable screw connection capacities are based on Section J4 of AISI S100-16 (2020) w/S2-20, herein referred to as AISI S100.
2. Screw capacities are based on Allowable Stress Design (ASD) and include safety factor of Ω = 3.0.
3. Screw shear (Pnvs), screw tension (Pnts) determined from the mean values from CFSEI Tech note (F701-23) . Table not valid for screw with lower Pnts or Pnvs capacities than listed.
4. The nominal diameter and head diameter based on CFSEI Tech note (F701-23) . Table not valid for screws with smaller diameters.
5. Tabulated values assume two sheets of equal thickness are connected. When connecting materials of different thicknesses or tensile strength, use the lower capacity of the two materials.
6. Allowable shear strength is based on the lesser of the shear strength of the sheet (Pnv/Ω) and of the screw (Pnvs/Ω). Refer to Section J4.3 of AISI S100.
7. Allowable pull-out strength is based on the lesser of the pull-out strength of the sheet not in contact with the screw head (Pnot/Ω) and of the screw tension (Pnts/Ω). Refer to Section J4.4.1 of AISI S100.
8. Allowable pull-over strength is based on the lesser of the pull-over strength of the sheet in contact with the screw head (Pnov/Ω) and Pnts/Ω. Refer to Section J4.4.2 of AISI S100.
   **Pull-over capacities have been reduced by 50%, based on the assumption that eccentrically loaded connections produce a non-uniform pull-over force on the head of the fastener.**
   **Pull-over capacities can be multiplied by 2 where no eccentric load is applied to fasteners but must be limited to the Pnts/Ω.**
9. Where fasteners are subjected to combined shear and tension, refer to Section J4.5 in AISI S100.
10. Capacities in bold font are governed by the strength of the screw, Pnvs or Pnts, not by sheet steel capacity.
11. The minimum distance from the center of the screw to the edge or end-of-steel is assumed to be 1.5 times the nominal diameter of the screw per AISI 240-20, Section B1.5.1.1.
12. When multiple fasteners are used, screws are assumed to have a center-to-center spacing of at least 3 times the nominal diameter per AISI 240-20, Section B1.5.1.2.

### Allowable Screw Shear and Tension Capacities (lb)

| Thickness (Mils) | Yield Strength, Fy (ksi) | Tensile Strength, Fu (ksi) | # 8 Screw 0.164'' dia., 0.272'' head Pnvs/Ω = 426 lb,Pnts/Ω = 469 lb | | | # 10 Screw 0.19'' dia., 0.34'' head Pnvs/Ω = 548 lb,Pnts/Ω = 653 lb | | | # 12 Screw 0.216'' dia., 0.34'' head Pnvs/Ω = 777 lb,Pnts/Ω = 1173 lb | | | 1/4" Screw 0.25'' dia., 0.409'' head Pnvs/Ω = 1016 lb,Pnts/Ω = 1480 lb | | |
|---|---|---|---|---|---|---|---|---|---|---|---|---|---|---|
| | | | | Tension | | | Tension | | | Tension | | | Tension | |
| | | | Shear | Pull- Out | Pull- Over | Shear | Pull- Out | Pull- Over | Shear | Pull- Out | Pull- Over | Shear | Pull- Out | Pull- Over |
| 18 | 33 | 33 | 48 | 29 | 42 | 52 | 33 | 53 | 56 | 38 | 53 | 60 | 44 | 64 |
| 27 | 33 | 33 | 89 | 43 | 64 | 96 | 50 | 79 | 102 | 57 | 79 | 110 | 66 | 96 |
| 30 | 33 | 33 | 103 | 48 | 70 | 111 | 55 | 87 | 118 | 63 | 87 | 127 | 73 | 105 |
| 33 | 33 | 45 | 164 | 72 | 106 | 177 | 84 | 132 | 189 | 95 | 132 | 203 | 110 | 159 |
| 43 | 33 | 45 | 244 | 94 | 138 | 263 | 109 | 172 | 280 | 124 | 172 | 301 | 144 | 207 |
| 54 | 33 | 45 | 344 | 118 | 173 | 370 | 137 | 217 | 395 | 156 | 217 | 425 | 181 | 261 |
| 54 | 50 | 65 | **426** | 171 | 250 | 535 | 198 | 313 | 570 | 225 | 313 | 613 | 261 | 376 |
| 68 | 33 | 45 | **426** | 149 | 218 | 522 | 173 | 273 | 557 | 196 | 273 | 599 | 227 | 328 |
| 68 | 50 | 65 | **426** | 215 | 315 | **548** | 249 | 394 | **777** | 283 | 394 | 866 | 328 | 474 |
| 97 | 33 | 45 | **426** | 213 | 311 | **548** | 246 | 389 | **777** | 280 | 389 | **1016** | 324 | 468 |
| 97 | 50 | 65 | **426** | 307 | 449 | **548** | 356 | 562 | **777** | 404 | 562 | **1016** | 468 | 676 |
| 118 | 33 | 45 | **426** | 260 | 380 | **548** | 301 | 475 | **777** | 342 | 475 | **1016** | 396 | 572 |
| 118 | 50 | 65 | **426** | 375 | **469** | **548** | 435 | **653** | **777** | 494 | 686 | **1016** | 572 | 826 |

## Weld Table Notes

1. Allowable weld capacities are based on section J2.4 (for fillet welds) and J2.5 (for flare groove welds) of the AISI S100-16/S2-20.
2. When connecting materials of different steel thicknesses or tensile strengths, use the lowest values.
3. Weld capacities are based on Allowable Strength Design (ASD) and include appropriate safety factors.
4. Weld capacities are based on either 3/32" or 1/8" diameter E60 or E70 Electrodes. For thinner materials, 0.030" to 0.035" diameter wire electrodes may provide best results.
5. Parallel capacity is considered to be loading in the direction of the weld.
6. For flare groove welds, the effective throat of weld is conservatively assumed to be less that 2t.

## Allowable Weld Capacity (Pounds) for 1-inch Long Welds

| Thickness (Mils) | Design Thickness | Fy: Yield (ksi) | Fu: Tensile (ksi) | Fillet Welds | | Flare Groove Welds | |
|---|---|---|---|---|---|---|---|
| | | | | Parallel | Perpendicular | Parallel | Perrpendicular |
| 43 | 0.0451 | 33 | 45 | 619 | 864 | 544 | 663 |
| 54 | 0.0566 | 33 | 45 | 822 | 1084 | 682 | 832 |
| 54 | 0.0566 | 50 | 65 | 1188 | 1566 | 985 | 1202 |
| 68 | 0.0713 | 33 | 45 | 1082 | 1365 | 859 | 1048 |
| 68 | 0.0713 | 50 | 65 | 1563 | 1972 | 1241 | 1514 |
| 97 | 0.1017 | 33 | 45 | 1618 | 1947 | 1226 | 1495 |
| 97 | 0.1017 | 50 | 65 | 2337 | 2813 | 1771 | 2159 |
| 118 | 0.1242 | 33 | 45 | Note-1 | Note-1 | Note-2 | Note-2 |
| 118 | 0.1242 | 50 | 65 | Note-1 | Note-1 | Note-2 | Note-2 |

**Note-1** For fillet welds, AISI S100 equation E2.5-4 must be checked for 118 mil material, or whenever the thickness of thinnest part is greater than 0.10-inch.

**Note-2** For flare groove welds, AISI S100 equation E2.6-4 must be checked for 118 mil material, or whenever the thickness of thinnest part is greater than 0.10-inch.



# Example Details

**Visit the SFIA website to find more details.**

### Stud Bracing with Cold-Rolled Channel

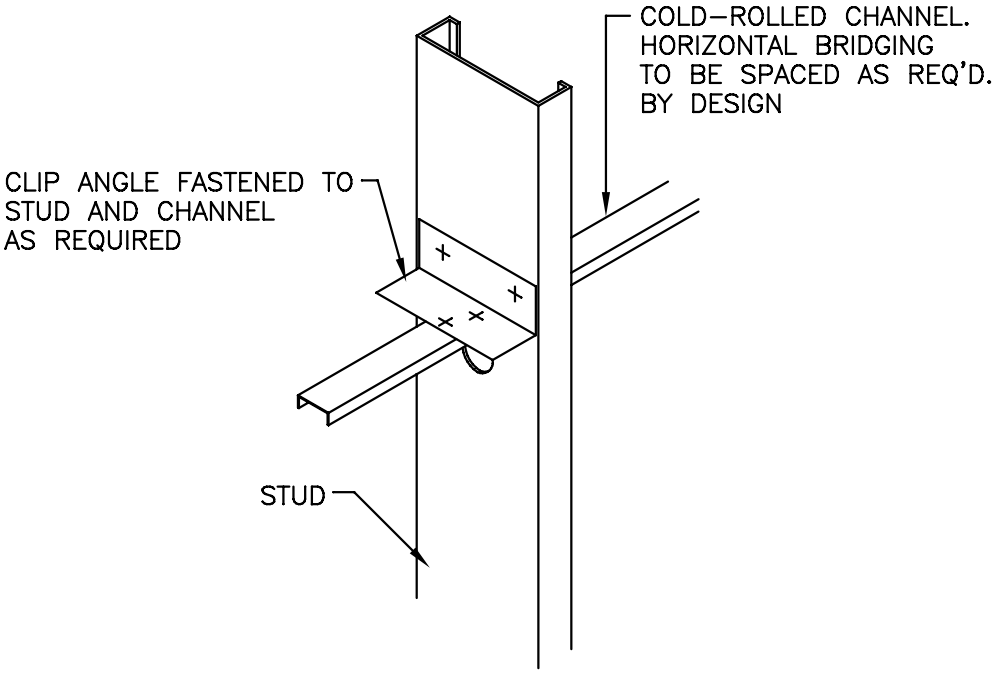

## Stud Bridging with Strap and Blocking

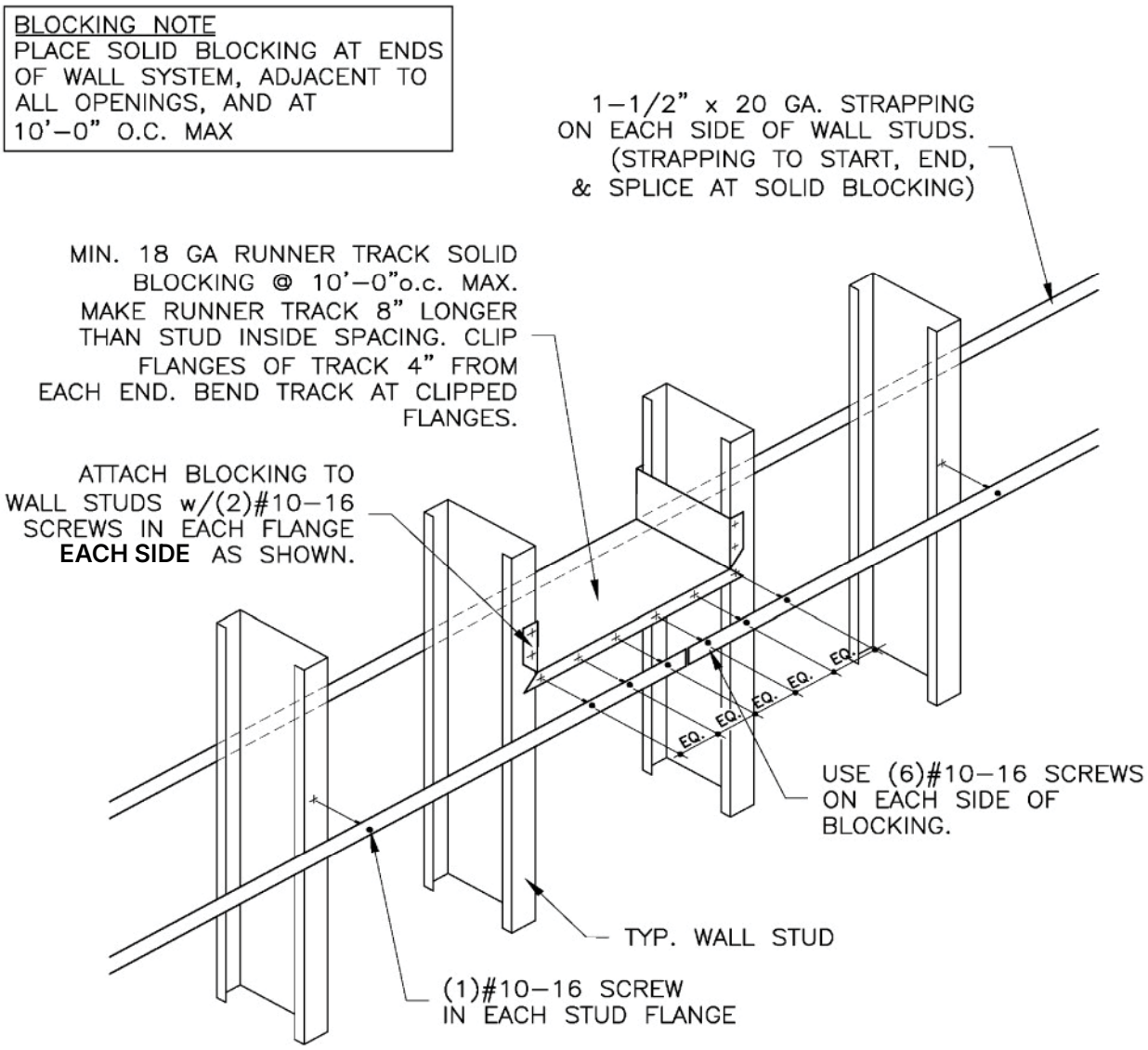


### STRAPPING LATERAL BRACING

1–1/2" x 20GA. STRAP WITH RUNNER TRACK BLOCKING

BLOCKING NOTE:
PLACE SOLID BLOCKING AT ENDS OF FLOOR SYSTEM, ADJACENT TO ALL OPENINGS, AND AT 10'–0"o.c. MAX.

STRAP NOTE:
TOP STRAP NOT REQ'D. IF CONTINUOUSLY ATTACHED RIGID SHEATHING IS USED. TEMPORARY BRACING OF TOP FLANGE DURING CONSTRUCTION MAY BE REQ'D.

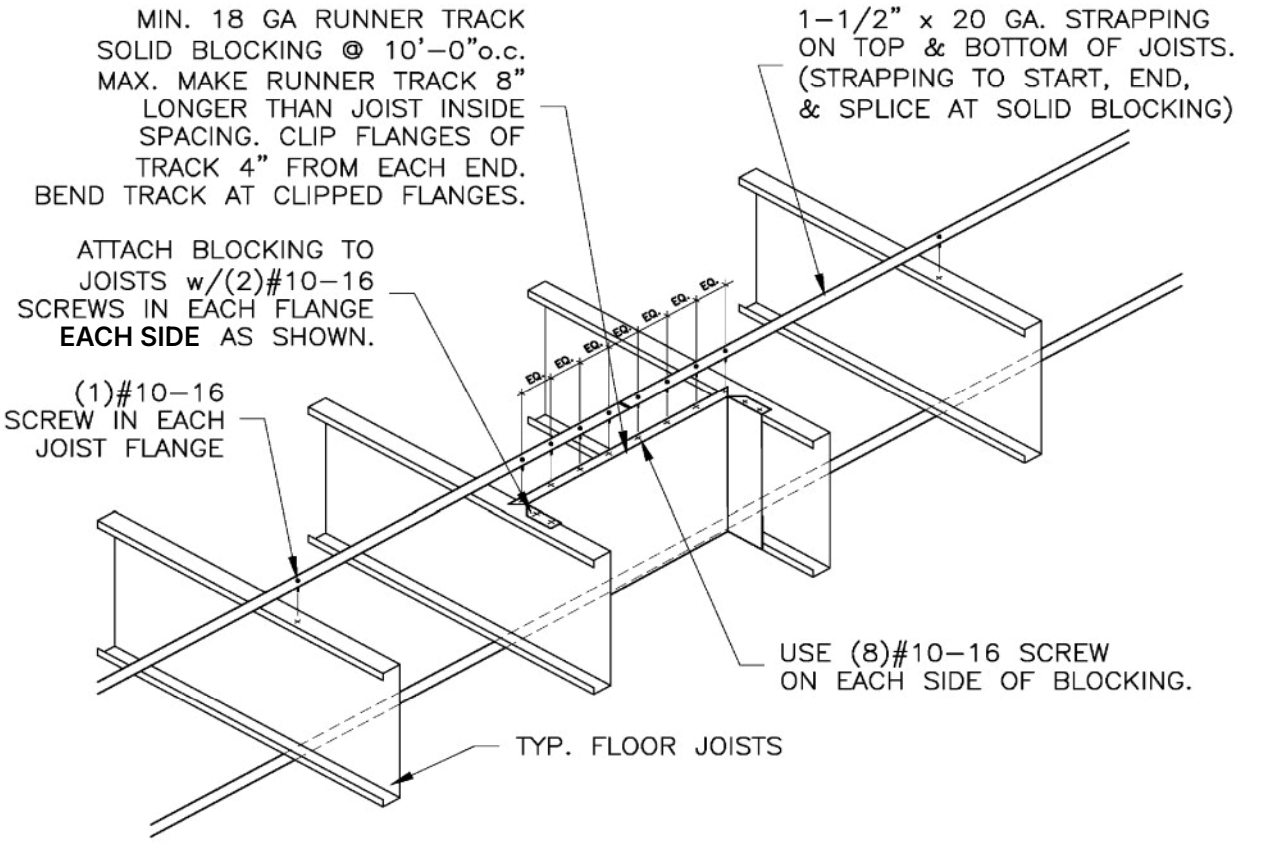


| BRIDGING RECOMMENDATIONS | |
|---|---|
| SPANS | ROWS REQUIRED |
| UP TO 14' | ONE ROW @ MID–SPAN |
| 14' TO 20' | TWO ROWS @ THIRD POINTS |
| 20' TO 26' | THREE ROWS @ QUARTER POINTS |

## JOIST BRIDGING

1–1/2" x 20GA. STRAP WITH RUNNER TRACK BLOCKING

## Floor Blocking Detail

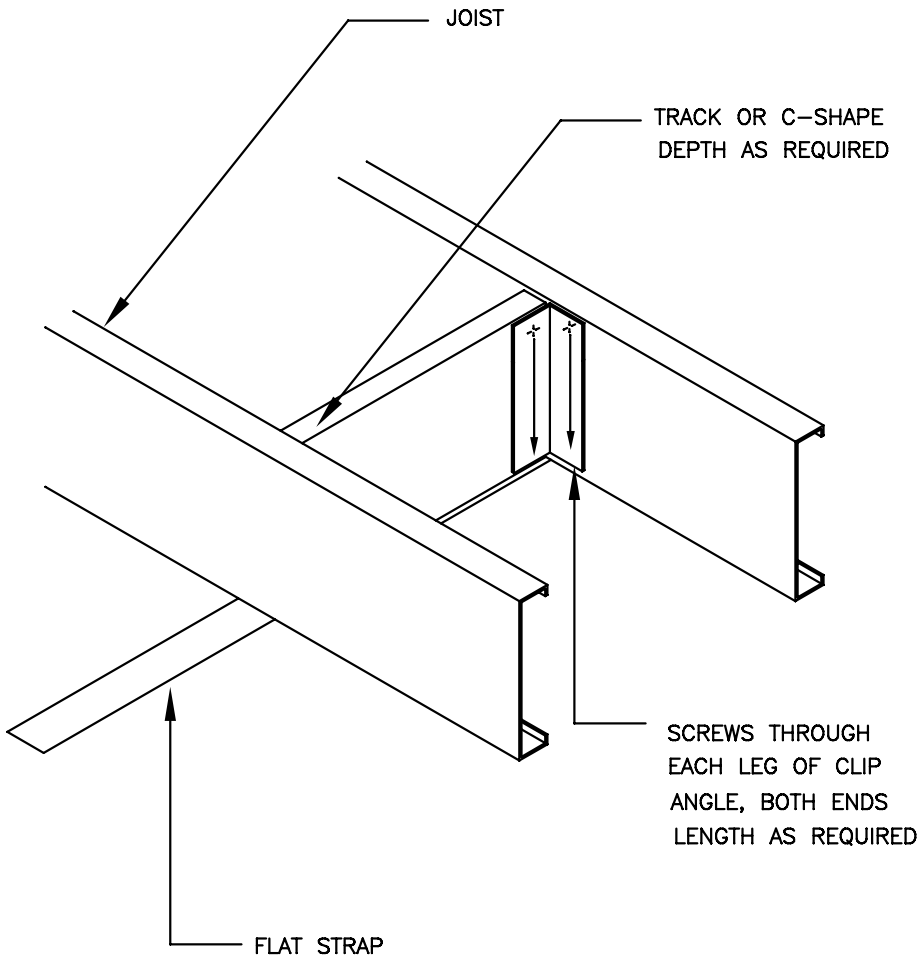

## Box Header to Jamb

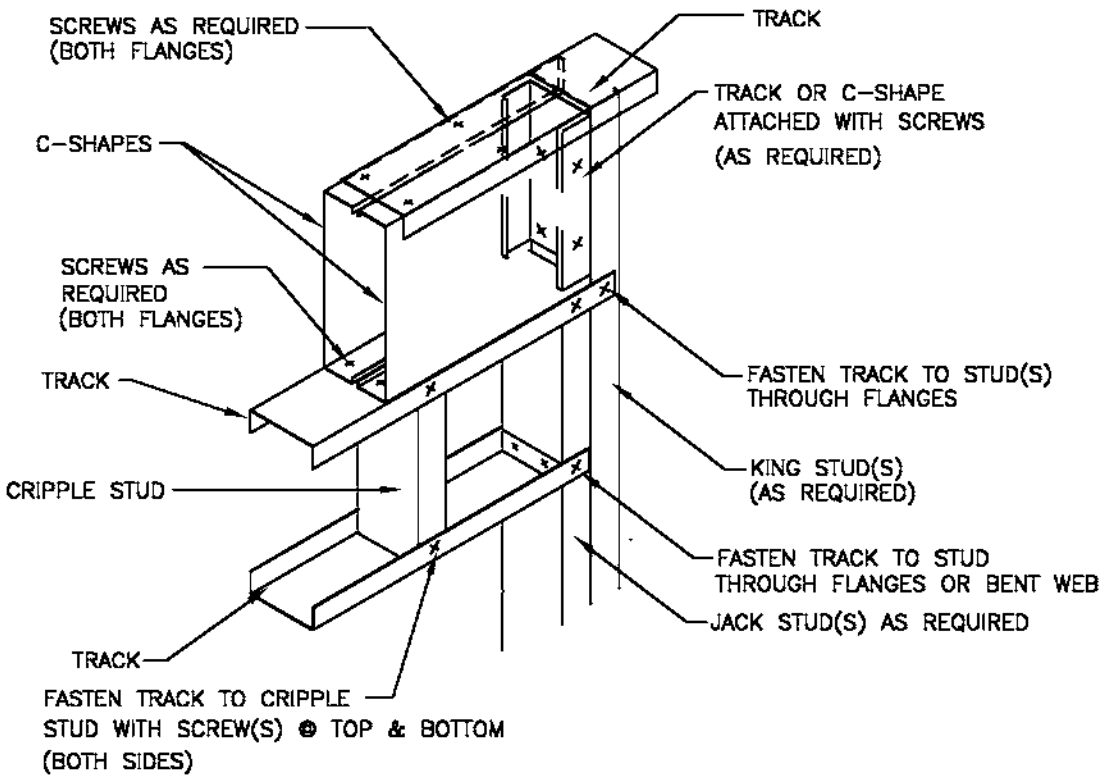

## Boxed Header

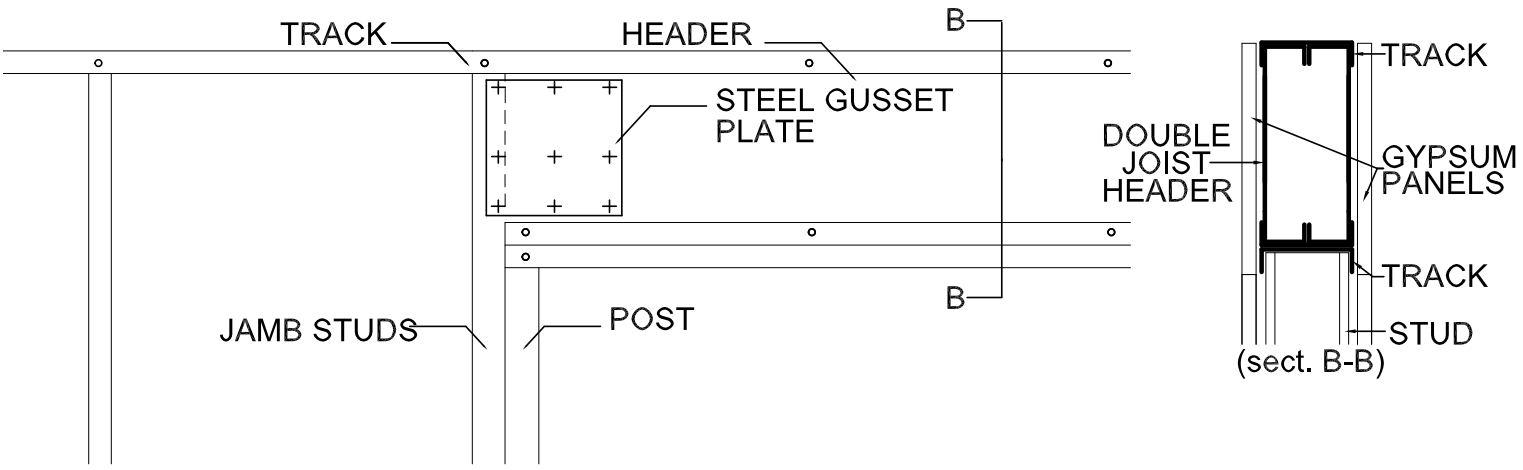


**General Notes**

1. Size and depth of header based on span and load conditions as determined by the Structural Specialty Engineer or as required by design.
2. Steel gusset size and gauge to be determined by load conditions shall be installed on both sides of the header/jamb interface.
3. Steel gusset plate attached with mechanical fasteners, size and spacing to meet specific design.
4. Specially designed proprietary accessories may be used in place of the steel gusset plates. Consult with accessory manufacturer for specific design.
5. Fasteners may be subsituted with welds as required if minimum steel thickness requirement of 54 mils is met.
6. Gypsum panels shown on both sides of cold-formed steel stud. Type and thickness of panel as required to meet job conditions.
7. Consult with specialty structural engineer for structural stud design.
   DISCLAIMER: This detail must not be used without a complete evaluation by the owner's design professional.

## Web Stiffener at Continuous Joist

Not To Scale

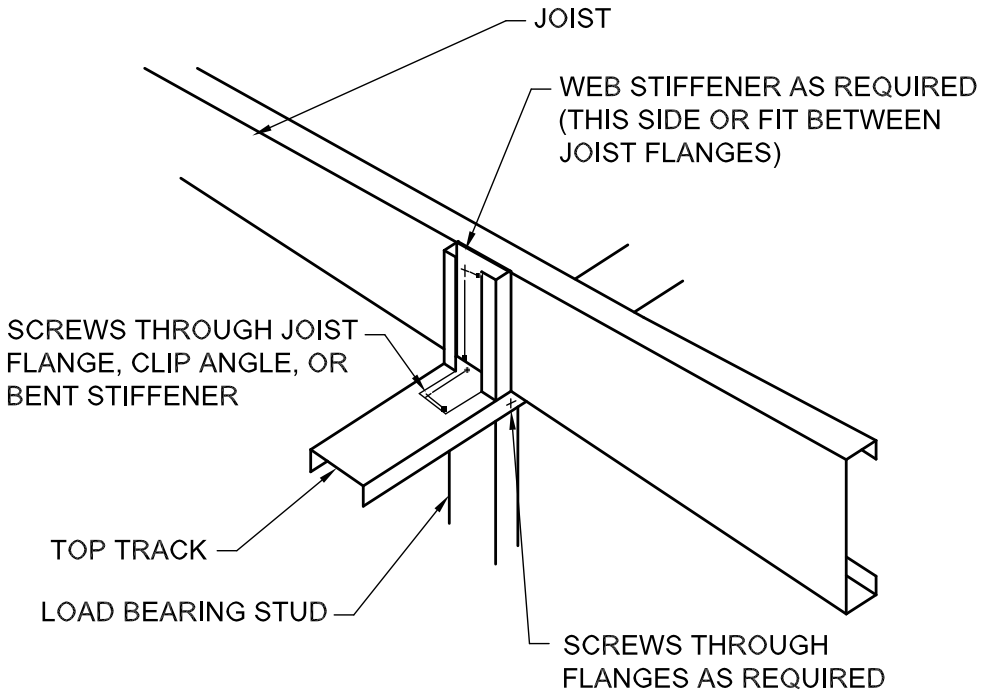


**General Notes**

1. Detail is from the AISI Document entitled Low-Rise Residential Construction Details.
2. Floor joist must bear directly on line with structural stud underneath.
3. Consult with specialty structural engineer for floor and wall design.

DISCLAIMER: This detail must not be used without a complete evaluation by the owner's design professional to verify the validity of the design.

## Web Stiffener at Load Bearing Wall

Not To Scale

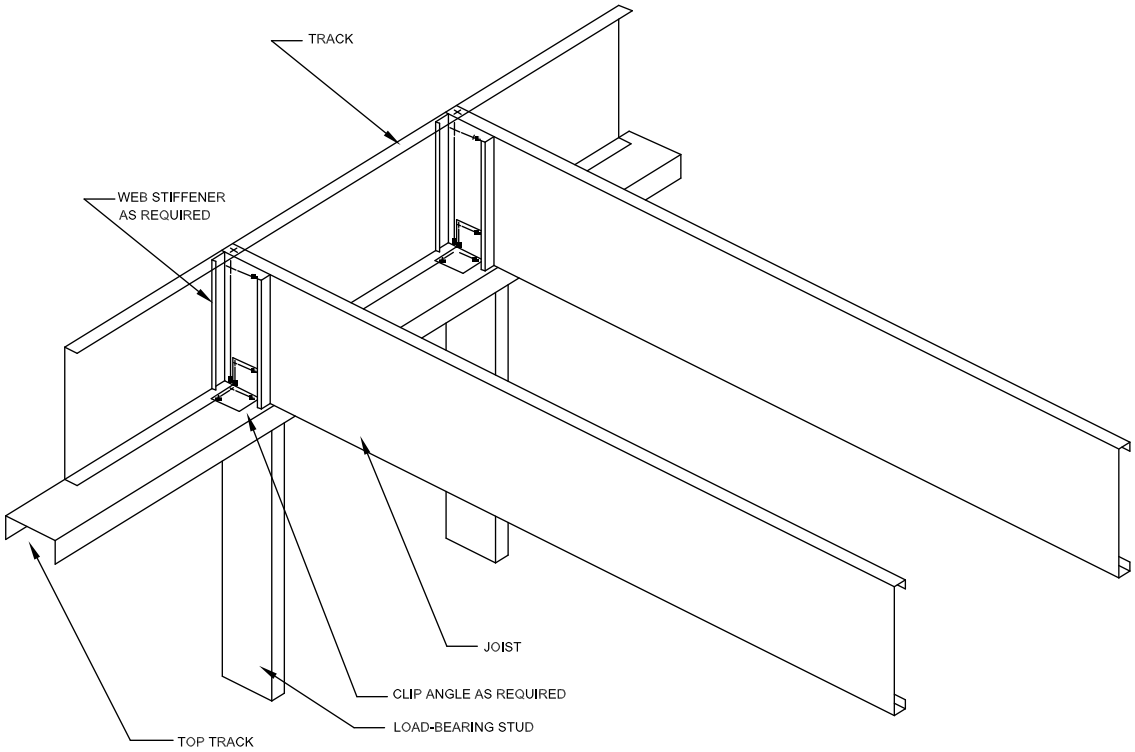


**General Notes**

1. Detail is from the AISI Document entitled Low-Rise Residential Construction Details.

DISCLAIMER: This detail must not be used without a complete evaluation by the owner's design professional to verify the validity of the design.

## Two Story X-Brace

Not To Scale

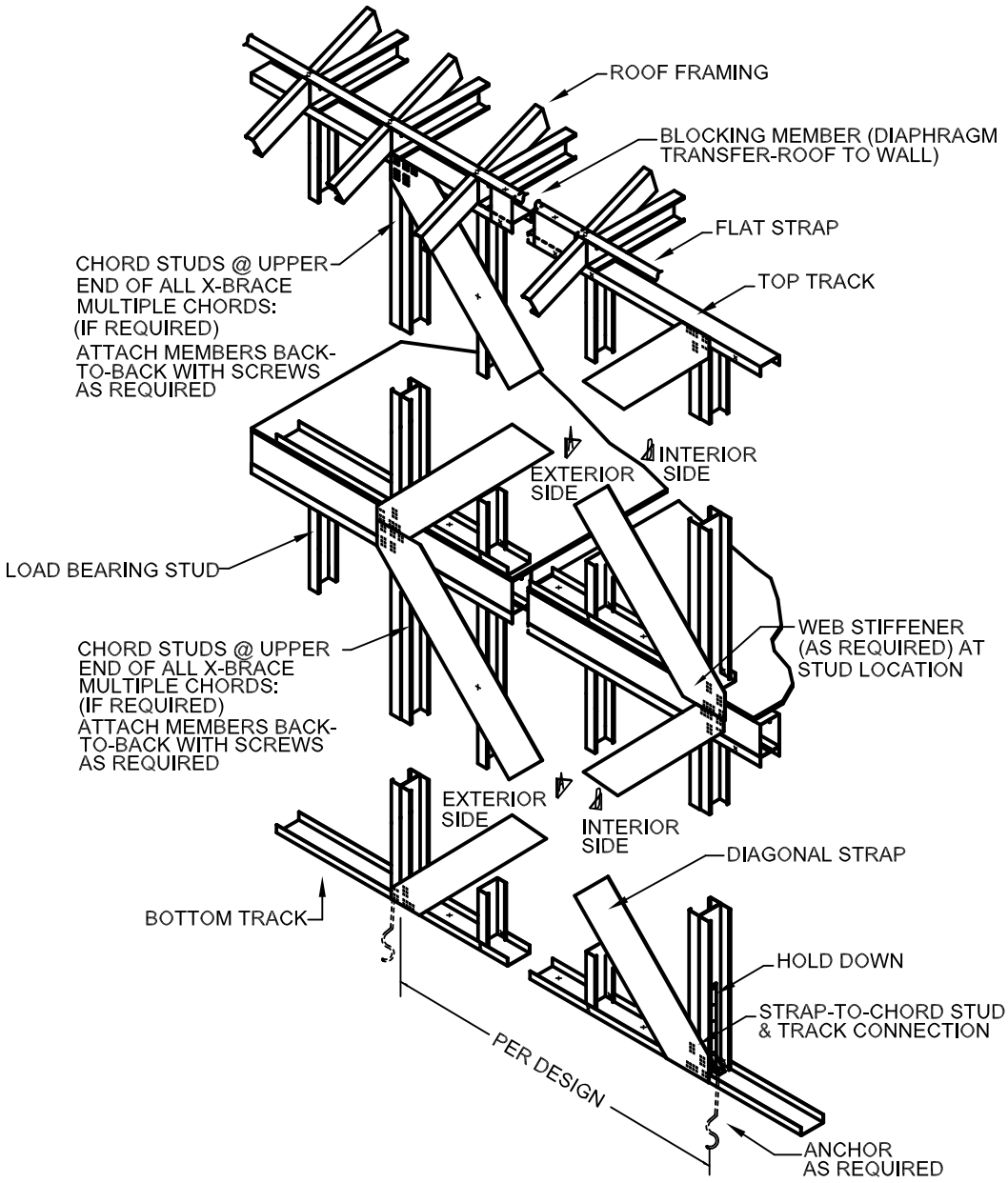


**General Notes**

1. Steel strap to be pre-tensioned or pre-tensioned after a majority of dead load is in place.
2. Detail is from the AISI Document entitled Low-Rise Residential Construction Details.
3. Consult with specialty structural engineer for wall and roof design.

DISCLAIMER: This detail must not be used without a complete evaluation by the owner's design professional to verify the validity of the design.

# Curtain Wall Spandrel Panel

**General Notes**

1. Consult with specialty structural engineer for curtain wall design.
2. Gypsum panel type and thickness on curtain wall as required to meet design considerations.
3. Air/water barrier continuous from foundation to roof per architectural drawings and specifications.
4. Continuous and stud cavity insulation and to meet requirements of IECC or ASHRAE 90.1 as per architectural drawings and specifications.

DISCLAIMER: This detail must not be used without a complete evaluation by the owner's design professional to verify the validity of the design.

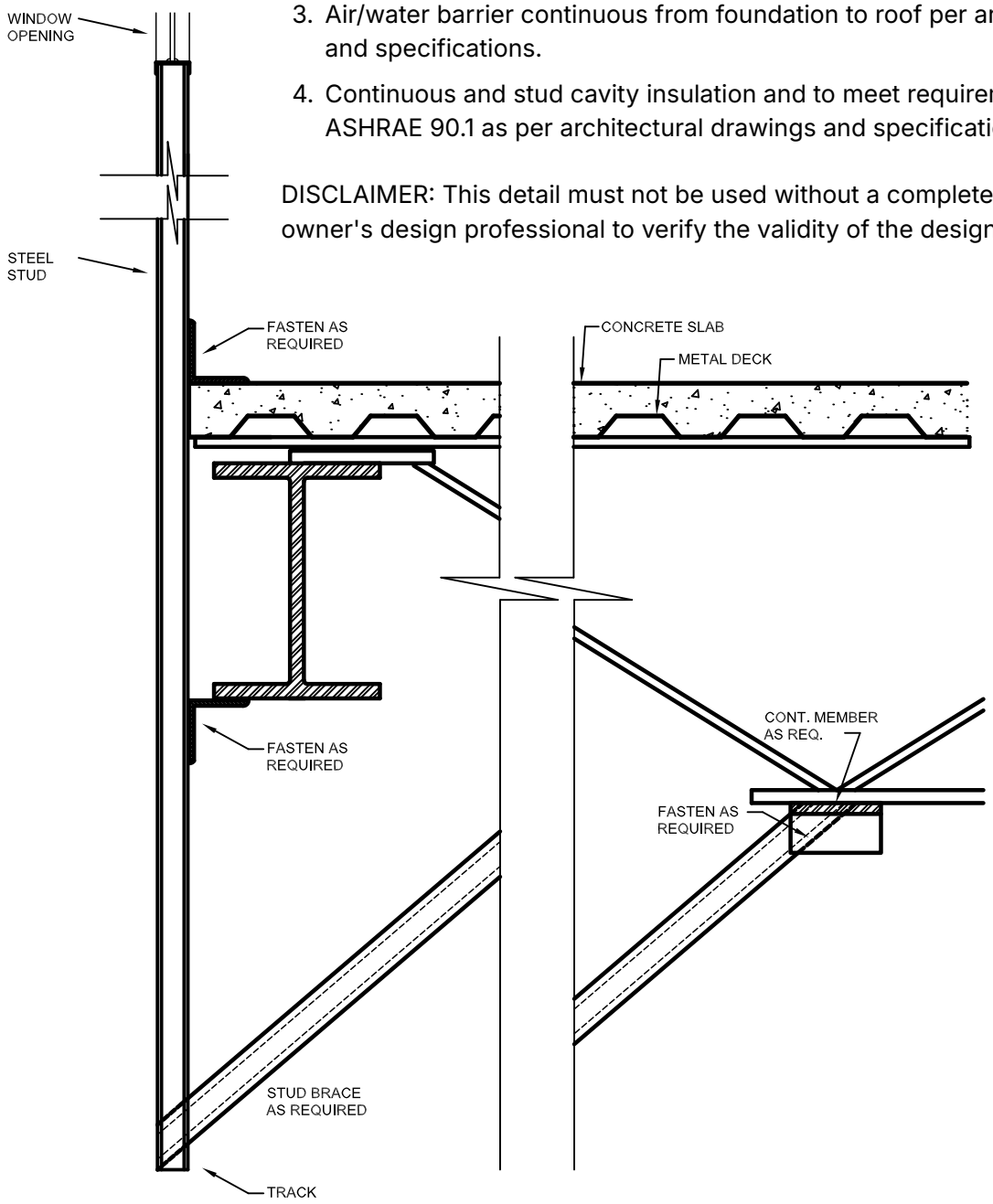

# Additional Technical Resources

As the use of cold-formed steel has grown over the past 60 years, so has the number of resources available to engineers, architects, contractors, and suppliers. The Resource Center of the Steel Framing Industry Association web site (www.steelframing.org/resources) is intended to help the design and construction professional cut through the clutter to find needed resource and contains a number of downloadable publications and links to other technical resources.

**Code Compliance Research Report, CCRR-0224.**

The SFIA Code Compliance Research Report (CCRR), issued by Architectural Testing Inc., provides the evidence, technical information, and professional evaluation that standard cold-formed steel framing stud and track manufactured by SFIA members comply with the 2024 International Building Code, 2024 International Residential Code, 2023 Florida Building Code including High Velocity Hurricane Zone (HVHZ), and the 2022 California Building Code.

**ICC-Evaluation Service Report, ICC-ES 4205.**

Evaluation reports from ICC Evaluation Service® may be used by code offi cials to verify that building products manufactured by SFIA members comply with code requirements. The evaluation reports provide information about what code requirements or acceptance criteria were used to evaluate the product, how the product should be installed to meet the requirements, how to identify the product, and much more. ES Reports are divided into eleven major areas.

**Guide Specifications**

*Section 05400 - Cold-Formed Metal Framing*
For use in the preparation of a project specification section covering cold-formed steel exterior wall studs, floor joists, trusses, ceiling and roof joists, and rafters. Materials may be fi eld installed or shop fabricated and fi eld erected. Studs may be either axially-load bearing or non-axially load bearing. Click here to download.

*Section 092216 - Nonstructural Metal Framing*
For use in the preparation of a project specifi cation section covering metal framing systems for interior non-load bearing walls, interior ceilings and exterior soffits. Click here to download.

**LEED and Sustainability**

*LEED® with Cold-Formed Steel:* Cold-formed steel products manufactured by Steel Framing Industry Association members help your project quality for multiple points under LEED® v4 for BD+C. Click here to download.

**Environmental Product Declaration (EPD) for Cold-Formed Steel Framing**

EPDs are developed from a Life Cycle Assessment and can help designers earn credits under LEED v4. This EPD represents cold-formed steel (CFS) studs and track made from hot-dip galvanized steel, produced and manufactured in U.S. and Canada. The steel in the studs and track is produced at a mix of steel mill types in the U.S. and Canada, which use both the BOF (basic oxygen furnace) and EAF (electric arc furnace) route for steelmaking.

**Apparent Sound Insulation in Cold-Formed Steel Buildings**

This report provides the Design Professional with information that maybe needed for enhanced sound control in buildings using ASTC rather than STC.

**Typical Construction Details**

They are intended to provide designers and contractors with guidance on design, detailing, and construction of buildings that utilize cold-formed steel framing members. These products should not be used in design or construction without an independent evaluation by a qualifi ed engineer or architect to verify the suitability of a particular product for use in a specific application.

**Directory of Fire and Acoustic Rated Assemblies**

This searchable directory provides the user with the ability to search a comprehensive range of fire and sound-rated cold-formed steel floor, wall and roof assemblies as listed by the major recognized testing agencies.

**Wall System Design Center**

An online resource that provides architects, owners, developers, and contractors with needed information about integrated wall and ceiling solutions, including how to assess the performance attributes of the various system components, and to help determine how these various components can impact the overall performance of the system.Apparent Sound Insulation in Cold-Formed Steel Buildings.

# Fire Rated Assemblies

February 2023

**Question:** Can standard products manufactured by SFIA members be used in the Fire Rated assemblies published by the recognized testing agencies?

**Answer:** Except where the word “proprietary” appears in system or element descriptions, all systems contained within the major fi re rated directories (published by the Gypsum Association, UL, Factory Mutual, etc.) are considered generic assemblies utilizing any product of any manufacturer provided that the products meet the appropriate standards.

The steel framing members included in the SFIA Product Technical Guide are considered “generic”, and have been reviewed for compliance with the governing standards, including AISI 2012, the International Building Code (2021), California Building Code (2022) and Florida Building Code (2020), including (HPVZ), and therefore may be used in any rated assemblies published by the GA, UL, FM, or other recognized testing agency. In addition, steel framing members produced by SFIA member companies participate in a code compliance certifi cation program administered by an independent third-party.

SFIA generic framing members that meet the minimum requirements for web depth, thickness, and other characteristics and therefore may be used in the generic published rated assemblies.

**Underwriters Laboratories Rated Designs**

The individual listings of UL rated designs identify the main elements of an assembly as numbers in a series (for U465: 1. Floor and Ceiling Runners, 2. Steel Studs, 3. Batts and Blankets, 4 Gypsum Board, 5. Joint Tape and Compound, 6. Resilient Channel, 8. Mineral and Fiber Board (optional), etc.). Unless a proprietary product is identifi ed as being the component in the description, that element is generic and any standard product that meets this description is permitted for use in this design.

Alternative products may also be used in place of the standard or generic, and the permitted products identifi ed in three ways, as a second level in the numerical series (i.e., 1A., 1B., 1C., etc.), with an asterisk (*), and with the wording “as an alternate to....” or “in lieu of...”. The products that have been approved for use in lieu of the standard products are then listed in the UL Design.

Submitted by:

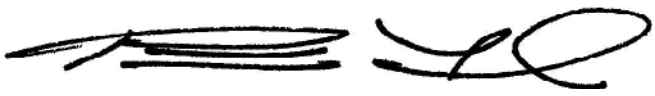

Patrick Ford, P.E.
Technical Director

## DEMAND THE BEST

# Insist on SFIA-Certified Steel

**Certified Cold-Formed Steel products are the intelligent choice with benefits to the contractor, designer, owner, and environment.**




**SFIA-certified products undergo rigorous third-party inspections to ensure they meet industry standards for code compliance.**

The SFIA-certified products meet or exceed the requirements of the applicable building codes and reference applicable standards. The SFIA certification program follows the most recent international standards published by the International Code Council, the most widely recognized building code authority in North America.

Your reputation depends on quality. So does your framing. SFIA certification is your assurance that the steel framing products you use meet the highest standards in the industry.

**Look for the SFIA label.**
**Ask your supplier today.**

SFIA
STEEL FRAMING INDUSTRY ASSOCIATION

SFIA

STEEL FRAMING INDUSTRY ASSOCIATION

The Steel Framing Industry Association is dedicated to expanding the market for cold-formed steel in construction through programs and initiatives that Promote the use of cold formed steel framing as a sustainable and cost-effective solution, Advocate the development and acceptance of favorable code provisions, Educate members with reliable data and other critical information that is essential to effective business planning, and create a positive environment for Innovation. The SFIA is the only organization where members come from virtually every facet of the construction industry, including steel mills, coil coaters, stud and connector manufacturers, component fabricators, engineers, researchers, suppliers/distributors, and builders and framing contractors. This uniquely broad membership enables us to identify issues and opportunities, along with programs and solutions that can be effectively implemented across the industry.

513 West Broad Street, Suite 210
Falls Church, VA 22046
Phone: 703-538-1613
Fax: 703-538-1733
membership@steelframingassociation.org
www.steelframing.org

Version 2026.1.7