Code Compliance Research Report
CCRR-0313

Issue Date: 07-15-2020
Revised Date: 07-08-2026
Renewal Date: 07-31-2027

DIVISION: 05 00 00 METALS
Section: 05 40 00 Cold-Formed Metal Framing

REPORT HOLDER:
Fortress Building Products
1720 N. 1st Street
Garland, TX 75040
972-231-4001
www.fortressbp.com

REPORT SUBJECT:
Evolution Steel Framing

1.0 SCOPE OF EVALUATION

1.1 This Research Report addresses compliance with the following Codes:

- 2024, 2021, 2018 *International Building Code®* (IBC)
- 2024, 2021, 2018 *International Residential Code®* (IRC)

NOTE: This report references the most recent Code editions cited. Section Numbers in earlier editions may differ.

1.2 *Evolution Steel Framing* has been evaluated for the following properties:

- Structural Performance
- Noncombustible materials

1.3 *Evolution Steel Framing* has been evaluated for the following uses:

- As described in this report, *Evolution Steel Framing* is a cold-formed steel framing system used as the structural framing of an exterior deck.

2.0 STATEMENT OF COMPLIANCE

Evolution Steel Framing complies with the Codes listed in Section 1.1, for the properties stated in Section 1.2 and uses stated in Section 1.3, when installed as described in this report, including the Conditions of Use stated in Section 6.0.

3.0 DESCRIPTION

3.1 *Evolution Steel Framing* is an assemblage of cold-formed steel components manufactured from galvanized carbon structural steel with a powder coat finish, installed with metal brackets, hangers, and fasteners.

3.2 2 x 6 Joists are manufactured from 16-gauge and 18-gauge carbon structural steel galvanized ASTM A653 G60 and ASTM A653 G90, respectively. 2 x 2 Support Joists are manufactured from 0.050-inch thick carbon structural steel galvanized ASTM A653 G60. See Figure 2 for nominal section profiles.

3.3 Ledgers are manufactured from 14-gauge carbon structural steel galvanized ASTM A653 G60, cold-formed in an "S" shape. See Figure 3 for nominal section profiles.

3.4 Rim joists are manufactured from 14-gauge carbon structural steel galvanized ASTM A653 G60, cold-formed in a "C" shape. See Figure 4 for nominal section profiles.

3.5 Beams are provided in single and double beams. Single beams consist of two 16-gauge structural steel galvanized ASTM A653 G60 cold-formed "J" shaped channels, that are factory welded to form a beam. The webs of the beams have an embossed pattern spaced 6 inches o.c. Double beams consist of two single beams, factory assembled with two double beam tracks fastened to the top and bottom edges with Evolution #12-14 (0.157 in minor diameter), 3/4-inch-long self-tapping screws spaced staggered 6 inches o.c. See Figure 6 for nominal section profiles.

3.6 Support posts are manufactured from 11-gauge structural steel galvanized ASTM A653 G60, in a 3.5-inch square cross-section or 12-gauge structural steel galvanized ASTM A653 G60 in a 5.5-inch square cross-section. See Figure 5 for nominal section profiles.

3.7 Brackets and connectors are manufactured from structural steel, galvanized ASTM A653 G60 of various steel thicknesses.

- 14-gauge: Ledger brackets and 45-degree brackets.
- 16-gauge: F-50 brackets, F-10 brackets, single beam post brackets, double beam post brackets, post cap, stair tray strap (for beam splice), pier spacer and post to pier bracket.
- 18-gauge: Rim joist brackets.
- 20-gauge: Joist straps, joist blocking, double hangers, and single hangers.
- 7-gauge: 5.5-inch post anchor bracket assembly.

4.0 PERFORMANCE CHARACTERISTICS

4.1 Allowable maximum spans for joists are given in Table 2 with respect to joist spacing of 10, 12 or 16 inches o.c. See Figure 1 for assembly and definition of joist spans.

4.2 Allowable maximum spans for 2 x 2 support joists are given in Table 3 with respect to joist spacing of 12 or 16 inches o.c.

4.3 Allowable maximum spans for single beams and double beams are given in Tables 4 thru 17 with respect to joist spacing of 10, 12 or 16 inches o.c. See Figure 1 for assembly and definition of beam spans.

4.4 Allowable maximum heights for steel support posts are given in Table 18 and Table 19.

4.5 *Evolution Steel Framing* details for supporting guard support posts are not within the scope of this evaluation. Framing must be designed and constructed to resist design loads for guards specified in IBC Section 1607.9 and IRC Table R301.5.

4.6 *Evolution Steel Framing* surface coating material has a flame spread index not greater than 50 when tested in accordance with ASTM E84, as required by IBC Section 703.3.1 for noncombustible materials.

5.0 INSTALLATION

5.1 General: *Evolution Steel Framing* must be installed in accordance with the manufacturer's published installation instructions, the applicable Code, and this Research Report. A copy of the manufacturer's instructions must be available on the jobsite during installation.

5.2 See Table 1 for *Evolution Steel Framing* fastening schedule. Evolution #12-14 (0.157 in minor diameter), 3/4-inch-long self-tapping screws for steel-to-steel connections, installed with an edge distance and center-to-center spacing of no less than 1/2 inches. Screws shall extend through the steel a minimum of three exposed threads.

5.3 Joists bear on the top flange of the beam (dropped beam construction) or fasten into the side of the beam via hanger brackets (flush beam construction). Beams are attached to steel support posts using single and double beam post brackets as illustrated in Figure 11 and Figure 14. Wood support posts are outside the scope of this report.

5.4 Joist blocking is required every bay at joist mid-span. Joist straps are used for blocking of 12 inch or 16 inches on center joist spacing. Joist spacing of different lengths utilize sections of 16-gauge or 18-gauge joists, which are installed using F-50 ledger brackets. See Figure 10 for joist blocking details.

5.5 Splicing of joists is outside the scope of this report.

5.6 Deck framing anchorage for lateral load shall comply with IRC Sections R507.1 and R507.8, and IBC Section 1604.8.3. See Paragraph 6.1.1.

5.7 Deck boards shall be directly fastened to each joist.

5.8 *Evolution Steel Framing* materials are classified as noncombustible building construction materials in accordance IBC Section 703.3

6.0 CONDITIONS OF USE

6.1 Installation must comply with this Research Report, the manufacturer's published installation instructions, and the applicable Code. In the event of a conflict, this report governs.

6.1.1 *Evolution Steel Framing,* identified in this report, is deemed to comply with the intent of the provisions of the referenced building codes subject to the following conditions in 6.2.1 through 6.2.3:Additional design and construction are required for anchorage of lateral loads to the primary framing in accordance with IRC Sections R507.1 and R507.8, and IBC Section 1604.8.3.

6.1.2 Wind uplift capacity of the deck boards and deck board fasteners shall be demonstrated to the building official's satisfaction.

6.1.3 Anchorage of the support posts is outside the scope of this report and shall be performed by a qualified engineer in accordance with the referenced codes. Where required by the building official, engineering calculations shall verify that the anchorage complies with the building code for the type of framing and condition of the supporting construction.

6.2 Stair construction details are not within the scope of this report.

6.3 *Evolution Steel Framing* is manufactured under a quality control program with inspections by Intertek Testing Services NA, Inc.

7.0 SUPPORTING EVIDENCE

7.1 Manufacturer's drawings and installation instructions.

7.2 Reports of engineering analysis in accordance with ICC-ES AC46, Acceptance Criteria for Cold-Formed Steel Framing Members, approved October 2019, revised December 2020.

7.3 Reports of testing and engineering analysis in accordance with AISI S100-2016 (2020) w/S2 Supplement, North American Specification for the Design of Cold-Formed Steel Structural Members.

7.4 Reports of testing demonstrating compliance with ASTM E84-21a, Standard Test Method for Surface Burning Characteristics of Building Materials.

7.5 Documentation of an Intertek approved quality control system for the manufacturing of products recognized in this report.

7.6 Intertek Listing Report "Fortress Building Products - Evolutions Steel Deck Framing", on the Intertek Directory of Building Products

8.0 IDENTIFICATION

8.1 *Evolution Steel Framing* components produced in accordance with this report shall be identified with a legible label, stencil, stamp or embossment, at a maximum of 96 inches on center, with the following information:

- Manufacturer's identification (Fortress Framing);
- The product name (Evolution Steel Framing);
- The material minimum base steel thickness;
- Minimum coating designation (G60);
- Minimum yield strength;
- The Intertek Mark as shown below;
- The Intertek Control Number;
- Code Compliance Research Report number (CCRR-0313).

CODE COMPLIANCE
Intertek
CCRR-0313

9.0 OTHER CODES

This section is not applicable.

CODE COMPLIANCE RESEARCH REPORT USE

9.1 Approval of building products and/or materials can only be granted by a building official having legal authority in the specific jurisdiction where approval is sought.

9.2 Code Compliance Research Reports shall not be used in any manner that implies an endorsement of the product by Intertek.

9.3 Reference to the https://bpdirectory.intertek.com is recommended to ascertain the current version and status of this report.

This Code Compliance Research Report ("Report") is for the exclusive use of Intertek's Client and is provided pursuant to the agreement between Intertek and its Client. Intertek's responsibility and liability are limited to the terms and conditions of the agreement. Intertek assumes no liability to any party, other than to the Client in accordance with the agreement, for any loss, expense or damage occasioned by the use of this Report. Only the Client is authorized to permit copying or distribution of this Report and then only in its entirety, and the Client shall not use the Report in a misleading manner. Client further agrees and understands that reliance upon the Report is limited to the representations made therein. The Report is not an endorsement or recommendation for use of the subject and/or product described herein. This Report is not the Intertek Listing Report covering the subject product and utilized for Intertek Certification and this Report does not represent authorization for the use of any Intertek certification marks. Any use of the Intertek name or one of its marks for the sale or advertisement of the tested material, product or service must first be approved in writing by Intertek.

TABLE 1 – EVOLUTION FRAMING FASTENING SCHEDULE

Connection	Figure	Fastening Description
Joist to Ledger	Figure 7	Where joist spacing is 12 or 16 inches on center, ledger brackets are inserted through the ledger's prefabricated holes, and fastened to the joist with two Evolution #12-14 (0.157 in minor diameter), 3/4-inch-long self-tapping screws. Where joist spacing is other than 12 or 16 inches on center, or where the ledger terminates, F-50 Brackets are utilized to fasten the joists to the ledger. Three Evolution #12-14 (0.157 in minor diameter), 3/4-inch-long self-tapping screws secure the bracket to the joist and three Evolution #12-14 (0.157 in minor diameter), 3/4-inch-long self-tapping screws attach the bracket to the ledger.
Joist to Rim Joist	Figure 8	Where joist spacing is 12 or 16 inches on center, two Evolution #12-14 (0.157 in minor diameter), 3/4-inch-long self-tapping screws attach the U-Rim Joist tabs to the joists. Where joist spacing is other than 12 or 16 inches on center, or where the rim joist terminates, F-50 Brackets are utilized. Three Evolution #12-14 (0.157 in minor diameter), 3/4-inch-long self-tapping screws fasten the bracket to the joist and three Evolution #12-14 (0.157 in minor diameter), 3/4-inch-long self-tapping screws attach the bracket to the rim joist. Rim Joist Brackets are utilized to connect joists to curved rim joists. Two Evolution #12-14 (0.157 in minor diameter), 3/4-inch-long self-tapping screws fasten the joist to the Rim Joist Brackets, and two Evolution #12-14 (0.157 in minor diameter), 3/4-inch-long self-tapping screws fasten the Rim Joist Bracket to the curved rim joist.
Joist to Beam	Figure 9	When joists are flush mounted to beams, Single Hanger, Double Hanger, and 45 Degree Brackets are utilized. ▪ Single and Double Hanger brackets are fastened to beams using six Evolution #12-14 (0.157 in minor diameter), 3/4-inch-long self-tapping screws, and two Evolution #12-14 (0.157 in minor diameter), 3/4-inch-long self-tapping screws for attachment to the joists. ▪ 45 Degree Brackets fasten to beams using six Evolution #12-14 (0.157 in minor diameter), 3/4-inch-long self-tapping screws, and two Evolution #12-14 (0.157 in minor diameter), 3/4-inch-long self-tapping screws for attachment to the joists. When joists rest on top of the beams, F-10 and Blocking Brackets are utilized. ▪ Where joist spacing is 12 or 16 inches on center, Joist Blocking Brackets fasten to beams using three Evolution #12-14 (0.157 in minor diameter), 3/4-inch-long self-tapping screws, and two Evolution #12-14 (0.157 in minor diameter), 3/4-inch-long self-tapping screws to attach to the joists. ▪ Where joist spacing is other than 12 or 16 inches on center, F-10 Brackets fasten to beams using two Evolution #12-14 (0.157 in minor diameter), 3/4-inch-long self-tapping screws, and two Evolution #12-14 (0.157 in minor diameter), 3/4-inch-long self-tapping screws to attach to the joists.
Beam to Post (3.5-inch Post)	Figure 11	Beams are fastened to 3.5-inch square support posts via Single and Double Beam Post brackets. Post brackets are fastened to beams with fourteen Evolution #12-14 (0.157 in minor diameter), 3/4-inch-long self-tapping screws, and fourteen Evolution #12-14 (0.157 in minor diameter), 3/4-inch-long self-tapping screws for attachment to the posts.
Beam Splice	Figure 12	Four 3/8-inch diameter stainless steel thru bolts are utilized for beam splices. See Figure 12 for installation details.

TABLE 1 – EVOLUTION FRAMING FASTENING SCHEDULE (CONTINUED)

Beam to Post (5.5-inch Post)	Figure 13 Figure 14	Beams are fastened to 5.5-inch square support posts via Single and Double Beam Post brackets. Each post bracket is fastened to beams with seven Evolution #12-14 (0.157 in minor diameter), 3/4-inch-long self-tapping screws, and to the post with seven Evolution #12-14 (0.157 in minor diameter), 3/4-inch-long self-tapping screws. One (single beam) or two (double beam) Post Caps are placed between the brackets and fastened with two Evolution #12-14 (0.157 in minor diameter), 3/4-inch-long self-tapping screws.
Beam Splice 5.5-inch Post	Figure 13	Two 3/8-inch diameter Grade 8 coated thru bolts are utilized for beam splices over 5.5-inch posts . See Figure 13 for installation details.

TABLE 2 – ALLOWABLE JOIST SPANS – 2 X 6 JOIST

Load Case	Joist Spacing	16 ga Joist		18 ga Joist	
		Maximum Supported Span/Cantilever	Maximum Reactions Ledger/Post	Maximum Supported Span/Cantilever	Maximum Reactions Ledger/Post
50 psf	10”	17'-5''/4'-11''	267 lb/477 lb	16'-3''/4'-7''	249 lb/445 lb
	12''	16'-4''/4'-8''	375 lb/675 lb	15'-4''/4'-4''	353 lb/631 lb
	16''	14'-10''/4'-3''	454 lb/818 lb	13'-11''/3'-11''	427 lb/762 lb
70 psf	10”	15'-2''/4'-4''	319 lb/575 lb	14'-2''/4'-0''	299 lb/534 lb
	12''	14'-3''/4'-1''	360 lb/649 lb	13'-4''/3'-9''	338 lb/602 lb
	16''	13'-0''/3'-8''	439 lb/783 lb	12'-2''/3'-5''	411 lb/732 lb
75 psf	10”	17'-5''/4'-11''	392 lb/701 lb	16'-3''/4'-7''	366 lb/654 lb
	12''	16'-4''/4'-8''	441 lb/793 lb	15'-4''/4'-4''	414 lb/741 lb
	16''	14'-10''/4'-3''	533 lb/962 lb	13'-11''/3'-11''	502 lb/895 lb
100 psf	10”	16'-0''/4'-6''	476 lb/848 lb	14'-11''/4'-3''	443 lb/795 lb
	12''	15'-0''/4'-3''	535 lb/957 lb	14'-1''/4'-0''	502 lb/900 lb
	16''	13'-6''/3'-10''	641 lb/1,150 lb	12'-2''/3'-5''	579 lb/1,031 lb
125 psf	10”	14'-10''/4'-3''	546 lb/985 lb	13'-10''/3'-11''	510 lb/913 lb
	12''	14'-0''/4'-0''	619 lb/1,114 lb	12'-8''/3'-7''	561 lb/1,003 lb
	16''	12'-1''/3'-5''	713 lb/1,276 lb	10'-11''/3'-1''	645 lb/1,152 lb
150 psf	10”	14'-0''/4'-0''	616 lb/1,109 lb	12'-8''/3'-7''	558 lb/999 lb
	12''	12'-9''/3'-7''	675 lb/1,203 lb	11'-7''/3'-3''	614 lb/1,092 lb
	16''	11'-1''/3'-2''	780 lb/1,405 lb	10'-0''/2'-10''	705 lb/1,263 lb
200 psf	10”	12'-2''/3'-5''	712 lb/1,268 lb	11'-0''/3'-1''	644 lb/1,146 lb
	12''	10'-10''/3'-1''	796 lb/1,430 lb	9'-9''/2'-9''	718 lb/1,282 lb
	16''	9'-4''/2'-8''	914 lb/1,646 lb	8'-5''/2'-5''	824 lb/1,487 lb

(1)The maximum span length of the joists are determined for the continuous beams with both the simply-supported and cantilevered span conditions. The joist members are analyzed in accordance with AISI S100-2016. Three types of loadings conditions are considered for this analysis. The first loading condition is the uniformly distributed load at simply supported span only, second loading condition is the uniformly distributed load at both simply supported and cantilevered span, and third loading condition is the uniformly distributed load at cantilevered span only. The maximum span length is determined by limiting the span to the maximum allowable span which meets the bending stress, shear stress, and deflection criteria for the members with the three loading conditions described above.

(2)The load cases are as follows:

Load Case	Dead Load	Live Load / Snow Load (40 psf Live Load)	Live Load / Snow Load (60 psf Live Load)
50 psf	10 psf	40 psf / 0 psf	-
70 psf	10 psf	-	60 psf / 0 psf
75 psf	10 psf	40 psf / 25 psf	-
100 psf	10 psf	40 psf / 50 psf	60 psf / 30 psf
125 psf	10 psf	40 psf / 75 psf	60 psf / 55 psf
150 psf	10 psf	40 psf / 100 psf	60 psf / 80 psf
200 psf	10 psf	40 psf / 150 psf	60 psf / 130 psf

TABLE 3 – ALLOWABLE JOIST SPANS – 2 X 2 SUPPORT JOIST

Load Case	Joist Spacing	Maximum Supported Span
50 psf	12''	5'-8''
	16''	5'-8''
70 psf	12''	5'-8''
	16''	5'-6''
75 psf	12''	5'-8''
	16''	5'-4''
100 psf	12''	5'-4''
	16''	4'-10''
125 psf	12''	4'-11''
	16''	4'-5''
150 psf	12''	4'-8''
	16''	4'-1''
200 psf	12''	4'-1''
	16''	3'-6''

(1)The maximum span length of the joists are determined for continuous beams with simply-supported span conditions. The joist members are analyzed in accordance with AISI S100-2016. Two types of loadings conditions are considered for this analysis. The first loading condition is the uniformly distributed load and the second loading condition is 300lb concentrated load at the center of the span. The maximum span length is determined by limiting the span to the maximum allowable span which meets the bending stress, shear stress, and deflection criteria for the members with the two loading conditions described above.

(2)The load cases are as follows:

Load Case	Dead Load	Live Load / Snow Load (40 psf Live Load)	Live Load / Snow Load (60 psf Live Load)
50 psf	10 psf	40 psf / 0 psf	-
70 psf	10 psf	-	-60 psf / 0 psf
75 psf	10 psf	40 psf / 25 psf	-
100 psf	10 psf	40 psf / 50 psf	60 psf / 30 psf
125 psf	10 psf	40 psf / 75 psf	60 psf / 55 psf
150 psf	10 psf	40 psf / 100 psf	60 psf / 80 psf
200 psf	10 psf	40 psf / 150 psf	60 psf / 130 psf

Notes for the following Tables 4 through 17:

The maximum beam span length for single beam and double beam are determined for the joists with the simply supported and cantilevered span conditions. The joist cantilever is limited to L/4 of the joist support. The beam members are analyzed in accordance with AISI S100-2016. The maximum span length is determined by limiting the span to the maximum allowable span which meets the bending stress, shear stress, and deflection criteria (L/360) for the members.

TABLE 4 – ALLOWABLE SINGLE BEAM SPANS (50 PSF)

50 psf		Joist Span															
		1'-0''	2'-0''	3'-0''	4'-0''	5'-0''	6'-0''	7'-0''	8'-0''	9'-0''	10'-0''	11'-0''	12'-0''	13'-0''	14'-0''	15'-0''	16'-0''
Joist Cantilever	0'-0''	20'-0''	20'-0''	20'-0''	20'-0''	20'-0''	20'-0''	20'-0''	19'-1''	17'-11''	17'-0''	16'-3''	15'-6''	14'-11''	14'-4''	13'-10''	13'-5''
	0'-6''	-	20'-0''	20'-0''	20'-0''	20'-0''	20'-0''	19'-0''	17'-11''	17'-0''	16'-2''	15'-6''	14'-11''	14'-4''	13'-10''	13'-5''	13'-0''
	1'-0''	-	-	-	20'-0''	20'-0''	18'-10''	17'-10''	16'-11''	16'-2''	15'-5''	14'-10''	14'-4''	13'-10''	13'-5''	13'-0''	12'-7''
	1'-6''	-	-	-	-	-	17'-7''	16'-9''	16'-0''	15'-4''	14'-9''	14'-3''	13'-9''	13'-4''	12'-11''	12'-7''	12'-3''
	2'-0''	-	-	-	-	-	-	-	15'-2''	14'-8''	14'-2''	13'-8''	13'-3''	12'-11''	12'-6''	12'-2''	11'-11''
	2'-6''	-	-	-	-	-	-	-	-	-	13'-7''	13'-2''	12'-10''	12'-6''	12'-2''	11'-10''	11'-7''
	3'-0''	-	-	-	-	-	-	-	-	-	-	-	12'-4''	12'-1''	11'-9''	11'-6''	11'-3''
	3'-6''	-	-	-	-	-	-	-	-	-	-	-	-	-	11'-5''	11'-2''	11'-0''
	4'-0''	-	-	-	-	-	-	-	-	-	-	-	-	-	-	-	10'-8''

(1) All loads and load combinations are determined using ASCE 7-16. LL=Live Load, DL=Dead Load, SL=Snow Load

(2) Loads used to produce this table are as follows: LL=40 psf, DL=10 psf, SL=0 psf. The following Total Load Combinations were considered:

DL + LL = 50 psf
DL + SL/WL = 10 psf
DL + 0.75LL + 0.75SL/WL = 40 psf
L/360 = 40 psf
L/240 = 50 psf

(3) Deflection limits for joists and beams are based on L/360 for live load and L/240 for total load.

(4) Joist and beam capacities are determined in accordance with AISI S100-16.

TABLE 5 – ALLOWABLE SINGLE BEAM SPANS (70 PSF)

70 psf		Joist Span															
		1'-0''	**2'-0''**	**3'-0''**	**4'-0''**	**5'-0''**	**6'-0''**	**7'-0''**	**8'-0''**	**9'-0''**	**10'-0''**	**11'-0''**	**12'-0''**	**13'-0''**	**14'-0''**	**15'-0''**	**16'-0''**
Joist Cantilever	**0'-0''**	20'-0''	20'-0''	20'-0''	20'-0''	20'-0''	18'-7''	17'-2''	16'-1''	15'-2''	14'-4''	13'-8''	13'-1''	12'-7''	12'-1''	11'-8''	11'-4''
	0'-6''	-	20'-0''	20'-0''	20'-0''	18'-6''	17'-2''	16'-0''	15'-1''	14'-4''	13'-8''	13'-1''	12'-7''	12'-1''	11'-8''	11'-4''	10'-11''
	1'-0''	-	-	-	18'-3''	16'-11''	15'-11''	15'-0''	14'-3''	13'-7''	13'-0''	12'-6''	12'-1''	11'-8''	11'-3''	10'-11''	10'-7''
	1'-6''	-	-	-	-	-	14'-10''	14'-2''	13'-6''	12'-11''	12'-5''	12'-0''	11'-7''	11'-3''	10'-11''	10'-7''	10'-4''
	2'-0''	-	-	-	-	-	-	-	12'-10''	12'-4''	11'-11''	11'-6''	11'-2''	10'-10''	10'-7''	10'-3''	10'-0''
	2'-6''	-	-	-	-	-	-	-	-	-	11'-5''	11'-1''	10'-9''	10'-6''	10'-3''	10'-0''	9'-9''
	3'-0''	-	-	-	-	-	-	-	-	-	-	-	10'-5''	10'-2''	9'-11''	9'-8''	9'-6''
	3'-6''	-	-	-	-	-	-	-	-	-	-	-	-	-	9'-8''	9'-5''	9'-3''
	4'-0''	-	-	-	-	-	-	-	-	-	-	-	-	-	-	-	9'-0''

(1) All loads and load combinations are determined using ASCE 7-16. LL=Live Load, DL=Dead Load, SL=Snow Load

(2) Loads used to produce this table are as follows: LL=60 psf, DL=10 psf, SL=0 psf. The following Total Load Combinations were considered:

DL + LL = 70 psf
DL + SL/WL = 10 psf
DL + 0.75LL + 0.75SL/WL = 55 psf
L/360 = 60 psf
L/240 = 70 psf

(3) Deflection limits for joists and beams are based on L/360 for live load and L/240 for total load.

(4) Joist and beam capacities are determined in accordance with AISI S100-16.

TABLE 6 – ALLOWABLE SINGLE BEAM SPANS (75 PSF)

75 psf		Joist Span															
		1'-0''	2'-0''	3'-0''	4'-0''	5'-0''	6'-0''	7'-0''	8'-0''	9'-0''	10'-0''	11'-0''	12'-0''	13'-0''	14'-0''	15'-0''	16'-0''
Joist Cantilever	0'-0''	20'-0''	20'-0''	20'-0''	20'-0''	20'-0''	20'-0''	18'-9''	17'-7''	16'-7''	15'-8''	14'-11''	14'-4''	13'-9''	13'-3''	12'-9''	12'-4''
	0'-6''	-	20'-0''	20'-0''	20'-0''	20'-0''	18'-9''	17'-6''	16'-6''	15'-8''	14'-11''	14'-3''	13'-9''	13'-3''	12'-9''	12'-4''	12'-0''
	1'-0''	-	-	-	19'-11''	18'-6''	17'-5''	16'-5''	15'-7''	14'-10''	14'-3''	13'-8''	13'-2''	12'-9''	12'-4''	11'-11''	11'-7''
	1'-6''	-	-	-	-	-	16'-3''	15'-5''	14'-9''	14'-2''	13'-7''	13'-2''	12'-8''	12'-3''	11'-11''	11'-7''	11'-3''
	2'-0''	-	-	-	-	-	-	-	14'-0''	13'-6''	13'-0''	12'-7''	12'-3''	11'-10''	11'-7''	11'-3''	10'-11''
	2'-6''	-	-	-	-	-	-	-	-	-	12'-6''	12'-2''	11'-10''	11'-6''	11'-2''	10'-11''	10'-8''
	3'-0''	-	-	-	-	-	-	-	-	-	-	-	11'-5''	11'-1''	10'-10''	10'-7''	10'-4''
	3'-6''	-	-	-	-	-	-	-	-	-	-	-	-	-	10'-6''	10'-4''	10'-1''
	4'-0''	-	-	-	-	-	-	-	-	-	-	-	-	-	-	-	9'-10''

(1) All loads and load combinations are determined using ASCE 7-16. LL=Live Load, DL=Dead Load, SL=Snow Load

(2) Loads used to produce this table are as follows: LL=40 psf, DL=10 psf, SL=25 psf. The following Total Load Combinations were considered:

DL + LL = 50 psf
DL + SL/WL = 35 psf
DL + 0.75LL + 0.75SL/WL = 58.75 psf
L/360 = 40 psf
L/240 = 58.75 psf

(3) Deflection limits for joists and beams are based on L/360 for live load and L/240 for total load.

(4) Joist and beam capacities are determined in accordance with AISI S100-16.

TABLE 7 – ALLOWABLE SINGLE BEAM SPANS (100 PSF)

100 psf		Joist Span															
		1'-0''	2'-0''	3'-0''	4'-0''	5'-0''	6'-0''	7'-0''	8'-0''	9'-0''	10'-0''	11'-0''	12'-0''	13'-0''	14'-0''	15'-0''	16'-0''
Joist Cantilever	0'-0''	20'-0''	20'-0''	20'-0''	20'-0''	19'-4''	17'-8''	16'-4''	15'-3''	14'-5''	13'-8''	13'-0''	12'-5''	11'-11''	11'-6''	11'-1''	10'-9''
	0'-6''	-	20'-0''	20'-0''	19'-3''	17'-7''	16'-3''	15'-3''	14'-4''	13'-7''	13'-0''	12'-5''	11'-11''	11'-6''	11'-1''	10'-9''	10'-5''
	1'-0''	-	-	-	17'-4''	16'-1''	15'-1''	14'-3''	13'-7''	12'-11''	12'-4''	11'-11''	11'-5''	11'-1''	10'-8''	10'-5''	10'-1''
	1'-6''	-	-	-	-	-	14'-1''	13'-5''	12'-10''	12'-4''	11'-10''	11'-5''	11'-0''	10'-8''	10'-4''	10'-1''	9'-9''
	2'-0''	-	-	-	-	-	-	-	12'-2''	11'-9''	11'-4''	10'-11''	10'-7''	10'-4''	10'-0''	9'-9''	9'-6''
	2'-6''	-	-	-	-	-	-	-	-	-	10'-10''	10'-6''	10'-3''	10'-0''	9'-8''	9'-6''	9'-3''
	3'-0''	-	-	-	-	-	-	-	-	-	-	-	9'-11''	9'-8''	9'-5''	9'-2''	9'-0''
	3'-6''	-	-	-	-	-	-	-	-	-	-	-	-	-	9'-2''	8'-11''	8'-9''
	4'-0''	-	-	-	-	-	-	-	-	-	-	-	-	-	-	-	8'-6''

(1) All loads and load combinations are determined using ASCE 7-16. LL=Live Load, DL=Dead Load, SL=Snow Load

(2) Loads used to produce this table and the Total Load Combinations are as follows:

LL=40 psf, DL=10 psf, SL=50 psf	LL=60 psf, DL=10 psf, SL=30 psf
DL + LL = 50 psf	DL + LL = 70 psf
DL + SL/WL = 60 psf	DL + SL/WL = 40 psf
DL + 0.75LL + 0.75SL/WL = 77.5 psf	DL + 0.75LL + 0.75SL/WL = 77.5 psf
L/360 = 40 psf	L/360 = 60 psf
L/240 = 77.5 psf	L/240 = 77.5 psf

(3) Deflection limits for joists and beams are based on L/360 for live load and L/240 for total load.

(4) Joist and beam capacities are determined in accordance with AISI S100-16.

TABLE 8 – ALLOWABLE SINGLE BEAM SPANS (125 PSF)

125 psf		Joist Span															
		1'-0''	2'-0''	3'-0''	4'-0''	5'-0''	6'-0''	7'-0''	8'-0''	9'-0''	10'-0''	11'-0''	12'-0''	13'-0''	14'-0''	15'-0''	16'-0''
Joist Cantilever	0'-0''	20'-0''	20'-0''	20'-0''	19'-5''	17'-4''	15'-10''	14'-8''	13'-8''	12'-11''	12'-3''	11'-8''	11'-1''	10'-8''	10'-3''	9'-11''	9'-7''
	0'-6''	-	20'-0''	19'-3''	17'-3''	15'-9''	14'-7''	13'-8''	12'-10''	12'-2''	11'-7''	11'-1''	10'-8''	10'-3''	9'-11''	9'-7''	9'-4''
	1'-0''	-	-	-	15'-6''	14'-5''	13'-6''	12'-9''	12'-2''	11'-7''	11'-1''	10'-8''	10'-3''	9'-11''	9'-7''	9'-3''	9'-0''
	1'-6''	-	-	-	-	-	12'-7''	12'-0''	11'-6''	11'-0''	10'-7''	10'-2''	9'-10''	9'-7''	9'-3''	9'-0''	8'-9''
	2'-0''	-	-	-	-	-	-	-	10'-11''	10'-6''	10'-2''	9'-10''	9'-6''	9'-3''	8'-11''	8'-9''	8'-6''
	2'-6''	-	-	-	-	-	-	-	-	-	9'-9''	9'-5''	9'-2''	8'-11''	8'-8''	8'-6''	8'-3''
	3'-0''	-	-	-	-	-	-	-	-	-	-	-	8'-10''	8'-7''	8'-5''	8'-3''	8'-0''
	3'-6''	-	-	-	-	-	-	-	-	-	-	-	-	-	8'-2''	8'-0''	7'-10''
	4'-0''	-	-	-	-	-	-	-	-	-	-	-	-	-	-	-	7'-7''

(1) All loads and load combinations are determined using ASCE 7-16. LL=Live Load, DL=Dead Load, SL=Snow Load

(2) Loads used to produce this table and the Total Load Combinations are as follows:

LL=40 psf, DL=10 psf, SL=75 psf	LL=60 psf, DL=10 psf, SL=55 psf
DL + LL = 50 psf	DL + LL = 70 psf
DL + SL/WL = 85 psf	DL + SL/WL = 65 psf
DL + 0.75LL + 0.75SL/WL = 96.25 psf	DL + 0.75LL + 0.75SL/WL = 96.25 psf
L/360 = 40 psf	L/360 = 60 psf
L/240 = 96.25 psf	L/240 = 96.25 psf

(3) Deflection limits for joists and beams are based on L/360 for live load and L/240 for total load.

(4) Joist and beam capacities are determined in accordance with AISI S100-16.

TABLE 9 – ALLOWABLE SINGLE BEAM SPANS (150 PSF)

150 psf		Joist Span															
		1'-0''	2'-0''	3'-0''	4'-0''	5'-0''	6'-0''	7'-0''	8'-0''	9'-0''	10'-0''	11'-0''	12'-0''	13'-0''	14'-0''	15'-0''	16'-0''
Joist Cantilever	0'-0''	20'-0''	20'-0''	20'-0''	17'-9''	15'-10''	14'-6''	13'-4''	12'-6''	11'-9''	11'-2''	10'-7''	10'-2''	9'-9''	9'-5''	9'-1''	8'-9''
	0'-6''	-	20'-0''	17'-7''	15'-9''	14'-5''	13'-4''	12'-6''	11'-9''	11'-2''	10'-7''	10'-2''	9'-9''	9'-4''	9'-1''	8'-9''	8'-6''
	1'-0''	-	-	-	14'-2''	13'-2''	12'-4''	11'-8''	11'-1''	10'-7''	10'-1''	9'-9''	9'-4''	9'-0''	8'-9''	8'-6''	8'-3''
	1'-6''	-	-	-	-	-	11'-6''	11'-0''	10'-6''	10'-1''	9'-8''	9'-4''	9'-0''	8'-8''	8'-5''	8'-2''	8'-0''
	2'-0''	-	-	-	-	-	-	-	9'-11''	9'-7''	9'-3''	8'-11''	8'-8''	8'-5''	8'-2''	7'-11''	7'-9''
	2'-6''	-	-	-	-	-	-	-	-	-	8'-10''	8'-7''	8'-4''	8'-1''	7'-11''	7'-9''	7'-6''
	3'-0''	-	-	-	-	-	-	-	-	-	-	-	8'-1''	7'-10''	7'-8''	7'-6''	7'-4''
	3'-6''	-	-	-	-	-	-	-	-	-	-	-	-	-	7'-5''	7'-3''	7'-1''
	4'-0''	-	-	-	-	-	-	-	-	-	-	-	-	-	-	-	6'-11''

(1) All loads and load combinations are determined using ASCE 7-16. LL=Live Load, DL=Dead Load, SL=Snow Load

(2) Loads used to produce this table and the Total Load Combinations are as follows:

LL=40 psf, DL=10 psf, SL=100 psf
DL + LL = 50 psf
DL + SL/WL = 110 psf
DL + 0.75LL + 0.75SL/WL = 115 psf
L/360 = 40 psf
L/240 = 115 psf

LL=60 psf, DL=10 psf, SL=80 psf
DL + LL = 70 psf
DL + SL/WL = 90 psf
DL + 0.75LL + 0.75SL/WL = 115 psf
L/360 = 60 psf
L/240 = 115 psf

(3) Deflection limits for joists and beams are based on L/360 for live load and L/240 for total load.

(4) Joist and beam capacities are determined in accordance with AISI S100-16.

TABLE 10 – ALLOWABLE SINGLE BEAM SPANS (200 PSF)

200 psf		Joist Span															
		1'-0''	2'-0''	3'-0''	4'-0''	5'-0''	6'-0''	7'-0''	8'-0''	9'-0''	10'-0''	11'-0''	12'-0''	13'-0''	14'-0''	15'-0''	16'-0''
Joist Cantilever	0'-0''	20'-0''	20'-0''	17'-5''	15'-0''	13'-5''	12'-3''	11'-4''	10'-7''	9'-11''	9'-5''	8'-11''	8'-7''	8'-3''	7'-11''	7'-7''	7'-4''
	0'-6''	-	17'-0''	14'-10''	13'-4''	12'-2''	11'-3''	10'-6''	9'-11''	9'-5''	8'-11''	8'-7''	8'-2''	7'-11''	7'-7''	7'-4''	7'-2''
	1'-0''	-	-	-	12'-0''	11'-2''	10'-5''	9'-10''	9'-4''	8'-11''	8'-6''	8'-2''	7'-11''	7'-7''	7'-4''	7'-2''	6'-11''
	1'-6''	-	-	-	-	-	9'-9''	9'-3''	8'-10''	8'-6''	8'-2''	7'-10''	7'-7''	7'-4''	7'-1''	6'-11''	6'-8''
	2'-0''	-	-	-	-	-	-	-	8'-5''	8'-1''	7'-9''	7'-6''	7'-3''	7'-1''	6'-10''	6'-8''	6'-6''
	2'-6''	-	-	-	-	-	-	-	-	-	7'-6''	7'-3''	7'-0''	6'-10''	6'-8''	6'-6''	6'-4''
	3'-0''	-	-	-	-	-	-	-	-	-	-	-	6'-9''	6'-7''	6'-5''	6'-3''	6'-2''
	3'-6''	-	-	-	-	-	-	-	-	-	-	-	-	-	6'-3''	6'-1''	6'-0''
	4'-0''	-	-	-	-	-	-	-	-	-	-	-	-	-	-	-	5'-10''

(1) All loads and load combinations are determined using ASCE 7-16. LL=Live Load, DL=Dead Load, SL=Snow Load

(2) Loads used to produce this table and the Total Load Combinations are as follows:

LL=40 psf, DL=10 psf, SL=150 psf
DL + LL = 50 psf
DL + SL/WL = 160 psf
DL + 0.75LL + 0.75SL/WL = 152.5 psf
L/360 = 40 psf
L/240 = 160 psf

LL=60 psf, DL=10 psf, SL=130 psf
DL + LL = 70 psf
DL + SL/WL = 140 psf
DL + 0.75LL + 0.75SL/WL = 152.5 psf
L/360 = 60 psf
L/240 = 152.5 psf

(3) Deflection limits for joists and beams are based on L/360 for live load and L/240 for total load.

(4) Joist and beam capacities are determined in accordance with AISI S100-16.

TABLE 11 – ALLOWABLE DOUBLE BEAM SPANS (50 PSF)

50 psf		Joist Span															
		1'-0''	2'-0''	3'-0''	4'-0''	5'-0''	6'-0''	7'-0''	8'-0''	9'-0''	10'-0''	11'-0''	12'-0''	13'-0''	14'-0''	15'-0''	16'-0''
Joist Cantilever	0'-0''	20'-0''	20'-0''	20'-0''	20'-0''	20'-0''	20'-0''	20'-0''	20'-0''	20'-0''	20'-0''	20'-0''	20'-0''	20'-0''	20'-0''	20'-0''	20'-0''
	0'-6''	-	20'-0''	20'-0''	20'-0''	20'-0''	20'-0''	20'-0''	20'-0''	20'-0''	20'-0''	20'-0''	20'-0''	20'-0''	20'-0''	20'-0''	20'-0''
	1'-0''	-	-	-	20'-0''	20'-0''	20'-0''	20'-0''	20'-0''	20'-0''	20'-0''	20'-0''	20'-0''	20'-0''	20'-0''	20'-0''	20'-0''
	1'-6''	-	-	-	-	-	20'-0''	20'-0''	20'-0''	20'-0''	20'-0''	20'-0''	20'-0''	20'-0''	20'-0''	20'-0''	20'-0''
	2'-0''	-	-	-	-	-	-	-	20'-0''	20'-0''	20'-0''	20'-0''	20'-0''	20'-0''	20'-0''	20'-0''	20'-0''
	2'-6''	-	-	-	-	-	-	-	-	-	20'-0''	20'-0''	20'-0''	20'-0''	20'-0''	20'-0''	19'-8''
	3'-0''	-	-	-	-	-	-	-	-	-	-	-	20'-0''	20'-0''	20'-0''	19'-7''	19'-2''
	3'-6''	-	-	-	-	-	-	-	-	-	-	-	-	-	19'-6''	19'-1''	18'-8''
	4'-0''	-	-	-	-	-	-	-	-	-	-	-	-	-	-	-	18'-2''

(1) All loads and load combinations are determined using ASCE 7-16. LL=Live Load, DL=Dead Load, SL=Snow Load

(2) Loads used to produce this table are as follows: LL=40 psf, DL=10 psf, SL=0 psf. The following Total Load Combinations were considered:

DL + LL = 50 psf
DL + SL/WL = 10 psf
DL + 0.75LL + 0.75SL/WL = 40 psf
L/360 = 40 psf
L/240 = 50 psf

(3) Deflection limits for joists and beams are based on L/360 for live load and L/240 for total load.

(4) Joist and beam capacities are determined in accordance with AISI S100-16.

TABLE 12 – ALLOWABLE DOUBLE BEAM SPANS (70 PSF)

70 psf		Joist Span															
		1'-0''	2'-0''	3'-0''	4'-0''	5'-0''	6'-0''	7'-0''	8'-0''	9'-0''	10'-0''	11'-0''	12'-0''	13'-0''	14'-0''	15'-0''	16'-0''
Joist Cantilever	0'-0''	20'-0''	20'-0''	20'-0''	20'-0''	20'-0''	20'-0''	20'-0''	20'-0''	20'-0''	20'-0''	20'-0''	20'-0''	20'-0''	20'-0''	19'-11''	19'-3''
	0'-6''	-	20'-0''	20'-0''	20'-0''	20'-0''	20'-0''	20'-0''	20'-0''	20'-0''	20'-0''	20'-0''	20'-0''	20'-0''	19'-10''	19'-3''	18'-8''
	1'-0''	-	-	-	20'-0''	20'-0''	20'-0''	20'-0''	20'-0''	20'-0''	20'-0''	20'-0''	20'-0''	19'-10''	19'-2''	18'-8''	18'-1''
	1'-6''	-	-	-	-	-	20'-0''	20'-0''	20'-0''	20'-0''	20'-0''	20'-0''	19'-9''	19'-2''	18'-7''	18'-1''	17'-7''
	2'-0''	-	-	-	-	-	-	-	20'-0''	20'-0''	20'-0''	19'-8''	19'-1''	18'-6''	18'-0''	17'-6''	17'-1''
	2'-6''	-	-	-	-	-	-	-	-	-	19'-6''	18'-11''	18'-5''	17'-11''	17'-5''	17'-0''	16'-7''
	3'-0''	-	-	-	-	-	-	-	-	-	-	-	17'-9''	17'-4''	16'-11''	16'-6''	16'-2''
	3'-6''	-	-	-	-	-	-	-	-	-	-	-	-	-	16'-5''	16'-1''	15'-9''
	4'-0''	-	-	-	-	-	-	-	-	-	-	-	-	-	-	-	15'-4''

(1) All loads and load combinations are determined using ASCE 7-16. LL=Live Load, DL=Dead Load, SL=Snow Load

(2) Loads used to produce this table are as follows: LL=60 psf, DL=10 psf, SL=0 psf. The following Total Load Combinations were considered:

DL + LL = 70 psf
DL + SL/WL = 10 psf
DL + 0.75LL + 0.75SL/WL = 55 psf
L/360 = 60 psf
L/240 = 70 psf

(3) Deflection limits for joists and beams are based on L/360 for live load and L/240 for total load.

(4) Joist and beam capacities are determined in accordance with AISI S100-16.

TABLE 13 – ALLOWABLE DOUBLE BEAM SPANS (75 PSF)

75 psf		Joist Span															
		1'-0''	2'-0''	3'-0''	4'-0''	5'-0''	6'-0''	7'-0''	8'-0''	9'-0''	10'-0''	11'-0''	12'-0''	13'-0''	14'-0''	15'-0''	16'-0''
Joist Cantilever	0'-0''	20'-0''	20'-0''	20'-0''	20'-0''	20'-0''	20'-0''	20'-0''	20'-0''	20'-0''	20'-0''	20'-0''	20'-0''	20'-0''	20'-0''	20'-0''	20'-0''
	0'-6''	-	20'-0''	20'-0''	20'-0''	20'-0''	20'-0''	20'-0''	20'-0''	20'-0''	20'-0''	20'-0''	20'-0''	20'-0''	20'-0''	20'-0''	20'-0''
	1'-0''	-	-	-	20'-0''	20'-0''	20'-0''	20'-0''	20'-0''	20'-0''	20'-0''	20'-0''	20'-0''	20'-0''	20'-0''	20'-0''	19'-9''
	1'-6''	-	-	-	-	-	20'-0''	20'-0''	20'-0''	20'-0''	20'-0''	20'-0''	20'-0''	20'-0''	20'-0''	19'-9''	19'-2''
	2'-0''	-	-	-	-	-	-	-	20'-0''	20'-0''	20'-0''	20'-0''	20'-0''	20'-0''	19'-8''	19'-2''	18'-8''
	2'-6''	-	-	-	-	-	-	-	-	-	20'-0''	20'-0''	20'-0''	19'-7''	19'-1''	18'-7''	18'-2''
	3'-0''	-	-	-	-	-	-	-	-	-	-	-	19'-5''	18'-11''	18'-6''	18'-1''	17'-8''
	3'-6''	-	-	-	-	-	-	-	-	-	-	-	-	-	17'-11''	17'-7''	17'-3''
	4'-0''	-	-	-	-	-	-	-	-	-	-	-	-	-	-	-	16'-9''

(1) All loads and load combinations are determined using ASCE 7-16. LL=Live Load, DL=Dead Load, SL=Snow Load

(2) Loads used to produce this table are as follows: LL=40 psf, DL=10 psf, SL=25 psf. The following Total Load Combinations were considered:

DL + LL = 50 psf
DL + SL/WL = 35 psf
DL + 0.75LL + 0.75SL/WL = 58.75 psf
L/360 = 40 psf
L/240 = 58.75 psf

(3) Deflection limits for joists and beams are based on L/360 for live load and L/240 for total load.

(4) Joist and beam capacities are determined in accordance with AISI S100-16.

TABLE 14 – ALLOWABLE DOUBLE BEAM SPANS (100 PSF)

100 psf		Joist Span															
		1'-0''	2'-0''	3'-0''	4'-0''	5'-0''	6'-0''	7'-0''	8'-0''	9'-0''	10'-0''	11'-0''	12'-0''	13'-0''	14'-0''	15'-0''	16'-0''
Joist Cantilever	0'-0''	20'-0''	20'-0''	20'-0''	20'-0''	20'-0''	20'-0''	20'-0''	20'-0''	20'-0''	20'-0''	20'-0''	20'-0''	20'-0''	19'-7''	18'-11''	18'-3''
	0'-6''	-	20'-0''	20'-0''	20'-0''	20'-0''	20'-0''	20'-0''	20'-0''	20'-0''	20'-0''	20'-0''	20'-0''	19'-6''	18'-10''	18'-3''	17'-9''
	1'-0''	-	-	-	20'-0''	20'-0''	20'-0''	20'-0''	20'-0''	20'-0''	20'-0''	20'-0''	19'-6''	18'-10''	18'-3''	17'-8''	17'-2''
	1'-6''	-	-	-	-	-	20'-0''	20'-0''	20'-0''	20'-0''	20'-0''	19'-5''	18'-9''	18'-2''	17'-8''	17'-2''	16'-8''
	2'-0''	-	-	-	-	-	-	-	20'-0''	20'-0''	19'-3''	18'-8''	18'-1''	17'-7''	17'-1''	16'-8''	16'-3''
	2'-6''	-	-	-	-	-	-	-	-	-	18'-6''	17'-11''	17'-5''	17'-0''	16'-7''	16'-2''	15'-9''
	3'-0''	-	-	-	-	-	-	-	-	-	-	-	16'-10''	16'-5''	16'-1''	15'-8''	15'-4''
	3'-6''	-	-	-	-	-	-	-	-	-	-	-	-	-	15'-7''	15'-3''	14'-11''
	4'-0''	-	-	-	-	-	-	-	-	-	-	-	-	-	-	-	14'-7''

(1) All loads and load combinations are determined using ASCE 7-16. LL=Live Load, DL=Dead Load, SL=Snow Load

(2) Loads used to produce this table and the Total Load Combinations are as follows:

LL=40 psf, DL=10 psf, SL=50 psf	LL=60 psf, DL=10 psf, SL=30 psf
DL + LL = 50 psf	DL + LL = 70 psf
DL + SL/WL = 60 psf	DL + SL/WL = 40 psf
DL + 0.75LL + 0.75SL/WL = 77.5 psf	DL + 0.75LL + 0.75SL/WL = 77.5 psf
L/360 = 40 psf	L/360 = 60 psf
L/240 = 77.5 psf	L/240 = 77.5 psf

(3) Deflection limits for joists and beams are based on L/360 for live load and L/240 for total load.

(4) Joist and beam capacities are determined in accordance with AISI S100-16.

TABLE 15 – ALLOWABLE DOUBLE BEAM SPANS (125 PSF)

125 psf		Joist Span															
		1'-0''	2'-0''	3'-0''	4'-0''	5'-0''	6'-0''	7'-0''	8'-0''	9'-0''	10'-0''	11'-0''	12'-0''	13'-0''	14'-0''	15'-0''	16'-0''
Joist Cantilever	0'-0''	20'-0''	20'-0''	20'-0''	20'-0''	20'-0''	20'-0''	20'-0''	20'-0''	20'-0''	20'-0''	19'-10''	18'-11''	18'-2''	17'-6''	16'-11''	16'-5''
	0'-6''	-	20'-0''	20'-0''	20'-0''	20'-0''	20'-0''	20'-0''	20'-0''	20'-0''	19'-9''	18'-11''	18'-2''	17'-6''	16'-11''	16'-4''	15'-11''
	1'-0''	-	-	-	20'-0''	20'-0''	20'-0''	20'-0''	20'-0''	19'-8''	18'-10''	18'-2''	17'-6''	16'-11''	16'-4''	15'-10''	15'-5''
	1'-6''	-	-	-	-	-	20'-0''	20'-0''	19'-7''	18'-9''	18'-0''	17'-5''	16'-10''	16'-3''	15'-10''	15'-4''	14'-11''
	2'-0''	-	-	-	-	-	-	-	18'-7''	17'-11''	17'-3''	16'-9''	16'-3''	15'-9''	15'-4''	14'-11''	14'-6''
	2'-6''	-	-	-	-	-	-	-	-	-	16'-7''	16'-1''	15'-8''	15'-3''	14'-10''	14'-6''	14'-2''
	3'-0''	-	-	-	-	-	-	-	-	-	-	-	15'-1''	14'-9''	14'-5''	14'-1''	13'-9''
	3'-6''	-	-	-	-	-	-	-	-	-	-	-	-	-	14'-0''	13'-8''	13'-5''
	4'-0''	-	-	-	-	-	-	-	-	-	-	-	-	-	-	-	13'-1''

(1) All loads and load combinations are determined using ASCE 7-16. LL=Live Load, DL=Dead Load, SL=Snow Load

(2) Loads used to produce this table and the Total Load Combinations are as follows:

LL=40 psf, DL=10 psf, SL=75 psf
DL + LL = 50 psf
DL + SL/WL = 85 psf
DL + 0.75LL + 0.75SL/WL = 96.25 psf
L/360 = 40 psf
L/240 = 96.25 psf

LL=60 psf, DL=10 psf, SL=55 psf
DL + LL = 70 psf
DL + SL/WL = 65 psf
DL + 0.75LL + 0.75SL/WL = 96.25 psf
L/360 = 60 psf
L/240 = 96.25 psf

(3) Deflection limits for joists and beams are based on L/360 for live load and L/240 for total load.

(4) Joist and beam capacities are determined in accordance with AISI S100-16.

TABLE 16 – ALLOWABLE DOUBLE BEAM SPANS (150 PSF)

150 psf		Joist Span															
		1'-0''	2'-0''	3'-0''	4'-0''	5'-0''	6'-0''	7'-0''	8'-0''	9'-0''	10'-0''	11'-0''	12'-0''	13'-0''	14'-0''	15'-0''	16'-0''
Joist Cantilever	0'-0''	20'-0''	20'-0''	20'-0''	20'-0''	20'-0''	20'-0''	20'-0''	20'-0''	20'-0''	19'-0''	18'-1''	17'-4''	16'-8''	16'-0''	15'-6''	15'-0''
	0'-6''	-	20'-0''	20'-0''	20'-0''	20'-0''	20'-0''	20'-0''	20'-0''	19'-0''	18'-1''	17'-4''	16'-7''	16'-0''	15'-5''	14'-11''	14'-6''
	1'-0''	-	-	-	20'-0''	20'-0''	20'-0''	19'-10''	18'-10''	18'-0''	17'-3''	16'-7''	16'-0''	15'-5''	14'-11''	14'-6''	14'-1''
	1'-6''	-	-	-	-	-	19'-7''	18'-8''	17'-10''	17'-2''	16'-6''	15'-11''	15'-4''	14'-11''	14'-5''	14'-0''	13'-8''
	2'-0''	-	-	-	-	-	-	-	17'-0''	16'-4''	15'-9''	15'-3''	14'-10''	14'-5''	14'-0''	13'-7''	13'-3''
	2'-6''	-	-	-	-	-	-	-	-	-	15'-2''	14'-8''	14'-3''	13'-11''	13'-7''	13'-3''	12'-11''
	3'-0''	-	-	-	-	-	-	-	-	-	-	-	13'-10''	13'-6''	13'-2''	12'-10''	12'-7''
	3'-6''	-	-	-	-	-	-	-	-	-	-	-	-	-	12'-9''	12'-6''	12'-3''
	4'-0''	-	-	-	-	-	-	-	-	-	-	-	-	-	-	-	11'-11''

(1) All loads and load combinations are determined using ASCE 7-16. LL=Live Load, DL=Dead Load, SL=Snow Load

(2) Loads used to produce this table and the Total Load Combinations are as follows:

LL=40 psf, DL=10 psf, SL=100 psf
DL + LL = 50 psf
DL + SL/WL = 110 psf
DL + 0.75LL + 0.75SL/WL = 115 psf
L/360 = 40 psf
L/240 = 115 psf

LL=60 psf, DL=10 psf, SL=80 psf
DL + LL = 70 psf
DL + SL/WL = 90 psf
DL + 0.75LL + 0.75SL/WL = 115 psf
L/360 = 60 psf
L/240 = 115 psf

(3) Deflection limits for joists and beams are based on L/360 for live load and L/240 for total load.

(4) Joist and beam capacities are determined in accordance with AISI S100-16.

TABLE 17 – ALLOWABLE DOUBLE BEAM SPANS (200 PSF)

200 psf		Joist Span															
		1'-0''	2'-0''	3'-0''	4'-0''	5'-0''	6'-0''	7'-0''	8'-0''	9'-0''	10'-0''	11'-0''	12'-0''	13'-0''	14'-0''	15'-0''	16'-0''
Joist Cantilever	0'-0''	20'-0''	20'-0''	20'-0''	20'-0''	20'-0''	20'-0''	19'-3''	18'-0''	16'-11''	16'-1''	15'-4''	14'-8''	14'-1''	13'-6''	13'-1''	12'-8''
	0'-6''	-	20'-0''	20'-0''	20'-0''	20'-0''	19'-2''	17'-11''	16'-11''	16'-1''	15'-3''	14'-8''	14'-1''	13'-6''	13'-1''	12'-8''	12'-3''
	1'-0''	-	-	-	20'-0''	19'-0''	17'-10''	16'-10''	16'-0''	15'-3''	14'-7''	14'-0''	13'-6''	13'-0''	12'-7''	12'-3''	11'-11''
	1'-6''	-	-	-	-	-	16'-7''	15'-10''	15'-1''	14'-6''	13'-11''	13'-5''	13'-0''	12'-7''	12'-2''	11'-10''	11'-6''
	2'-0''	-	-	-	-	-	-	-	14'-4''	13'-10''	13'-4''	12'-11''	12'-6''	12'-2''	11'-10''	11'-6''	11'-2''
	2'-6''	-	-	-	-	-	-	-	-	-	12'-10''	12'-5''	12'-1''	11'-9''	11'-5''	11'-2''	10'-11''
	3'-0''	-	-	-	-	-	-	-	-	-	-	-	11'-8''	11'-4''	11'-1''	10'-10''	10'-7''
	3'-6''	-	-	-	-	-	-	-	-	-	-	-	-	-	10'-9''	10'-6''	10'-4''
	4'-0''	-	-	-	-	-	-	-	-	-	-	-	-	-	-	-	10'-1''

(1) All loads and load combinations are determined using ASCE 7-16. LL=Live Load, DL=Dead Load, SL=Snow Load

(2) Loads used to produce this table and the Total Load Combinations are as follows:

LL=40 psf, DL=10 psf, SL=150 psf	LL=60 psf, DL=10 psf, SL=130 psf
DL + LL = 50 psf	DL + LL = 70 psf
DL + SL/WL = 160 psf	DL + SL/WL = 140 psf
DL + 0.75LL + 0.75SL/WL = 152.5 psf	DL + 0.75LL + 0.75SL/WL = 152.5 psf
L/360 = 40 psf	L/360 = 60 psf
L/240 = 160 psf	L/240 = 152.5 psf

(3) Deflection limits for joists and beams are based on L/360 for live load and L/240 for total load.

(4) Joist and beam capacities are determined in accordance with AISI S100-16.

TABLE 18 – ALLOWABLE POST HEIGHTS – 3.5-INCH SQUARE TUBE

Dead Load	Live Load	Snow Load	Maximum Deck Tributary Area	Maximum Post Height
10 psf	40 psf	0 psf	200 ft²	120.0 in.
10 psf	40 psf	50 psf	200 ft²	120.0 in.
10 psf	40 psf	75 psf	200 ft²	120.0 in.
10 psf	40 psf	100 psf	150 ft²	120.0 in.
			200 ft²	109.3 in.
10 psf	40 psf	150 psf	100 ft²	120.0 in.
			150 ft²	101.5 in

(1) All loads and load combinations are determined using ASCE 7-16. LL=Live Load, DL=Dead Load, SL=Snow Load

(2) Loads used to produce this table are as follows: LL=40 psf, DL=10 psf, SL=150 psf. The following Total Load Combinations were considered:

DL + LL = 50 psf
DL + SL/WL = 160 psf
DL + 0.75LL + 0.75SL/WL = 152.5 psf
L/360 = 40 psf
L/240 = 160 psf

TABLE 19 – ALLOWABLE POST HEIGHTS – 5.5-INCH SQUARE TUBE

Dead Load	Live Load	Snow Load	Maximum Deck Tributary Area	Maximum Post Height
10 psf	40 psf	0 psf	200 ft²	240.0 in.
10 psf	40 psf	50 psf	200 ft²	240.0 in.
10 psf	40 psf	75 psf	200 ft²	240.0 in.
10 psf	40 psf	100 psf	200 ft²	240.0 in.
10 psf	40 psf	150 psf	150 ft²	240.0 in.
			200 ft²	174.0 in.

(1) All loads and load combinations are determined using ASCE 7-16. LL=Live Load, DL=Dead Load, SL=Snow Load

(2) Loads used to produce this table are as follows: LL=40 psf, DL=10 psf, SL=150 psf. The following Total Load Combinations were considered:

DL + LL = 50 psf
DL + SL/WL = 160 psf
DL + 0.75LL + 0.75SL/WL = 152.5 psf
L/360 = 40 psf
L/240 = 160 psf

PARTS SHOWN

1. S-Ledger (pre-spaced 12" & 16" O.C.)
2. Ledger Bracket
3. Joist (2"x6")
4. F50 Bracket
5. Strap (mid-span blocking)
6. Beam (2"x11")
7. Beam Cap
8. Post to Beam Bracket
9. Post (3½"x3½"x10')
10. Blocking (12" & 16" O.C.)
11. Post to Pier Bracket
12. Single Hanger Brackets
13. Rim Joist (pre-spaced 12" & 16" O.C.)

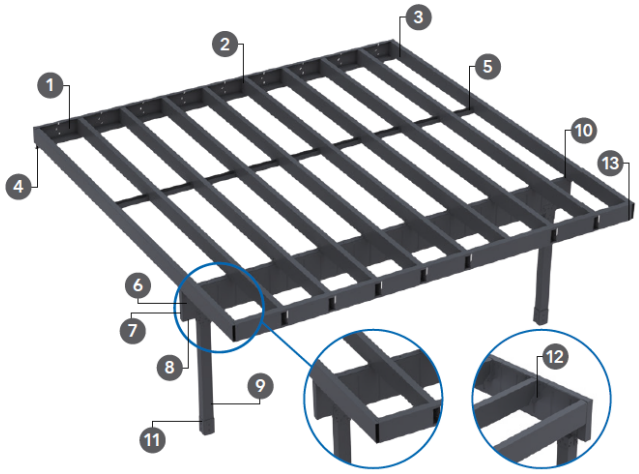

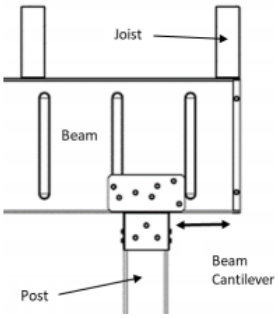

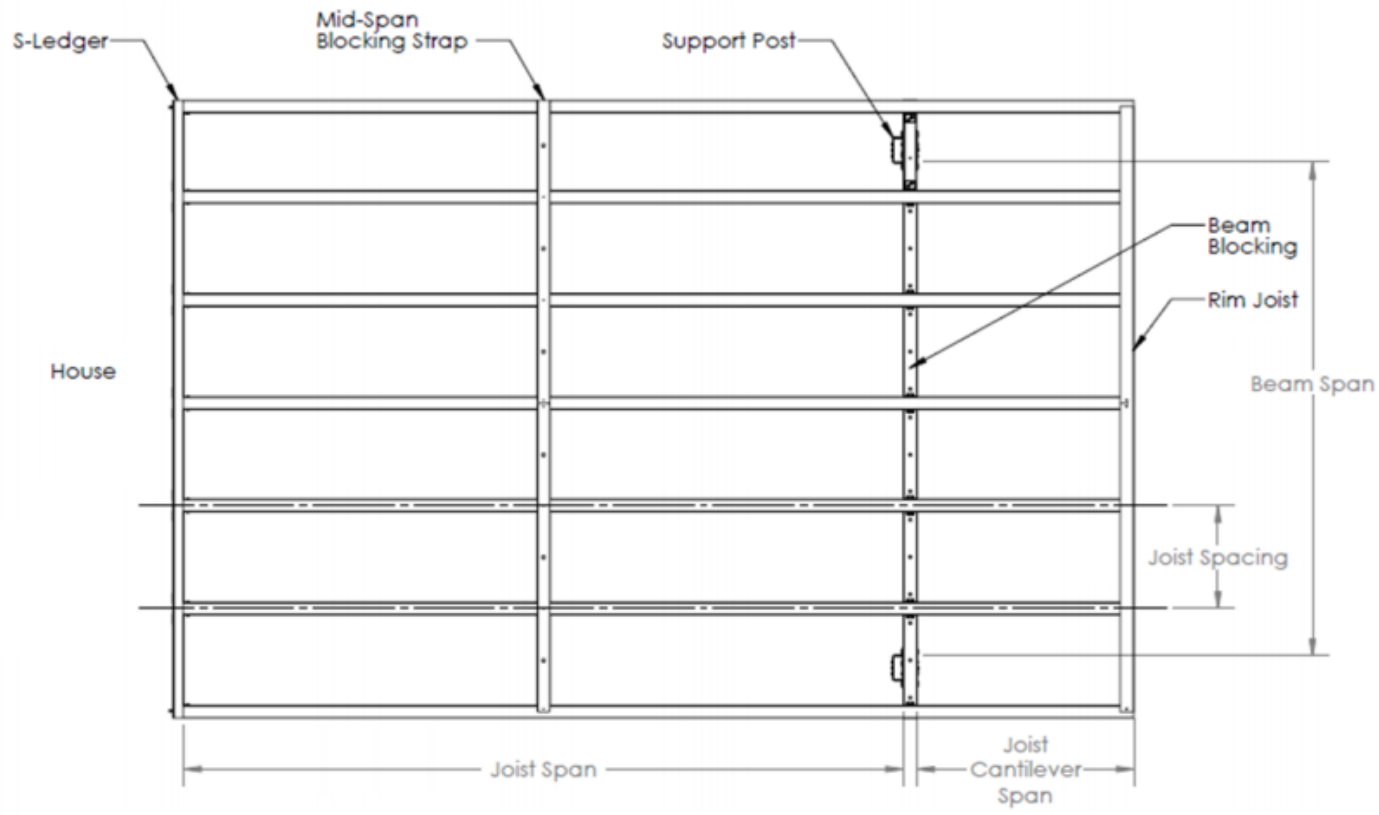

FIGURE 1 – EVOLUTION DECK FRAMING ASSEMBLY

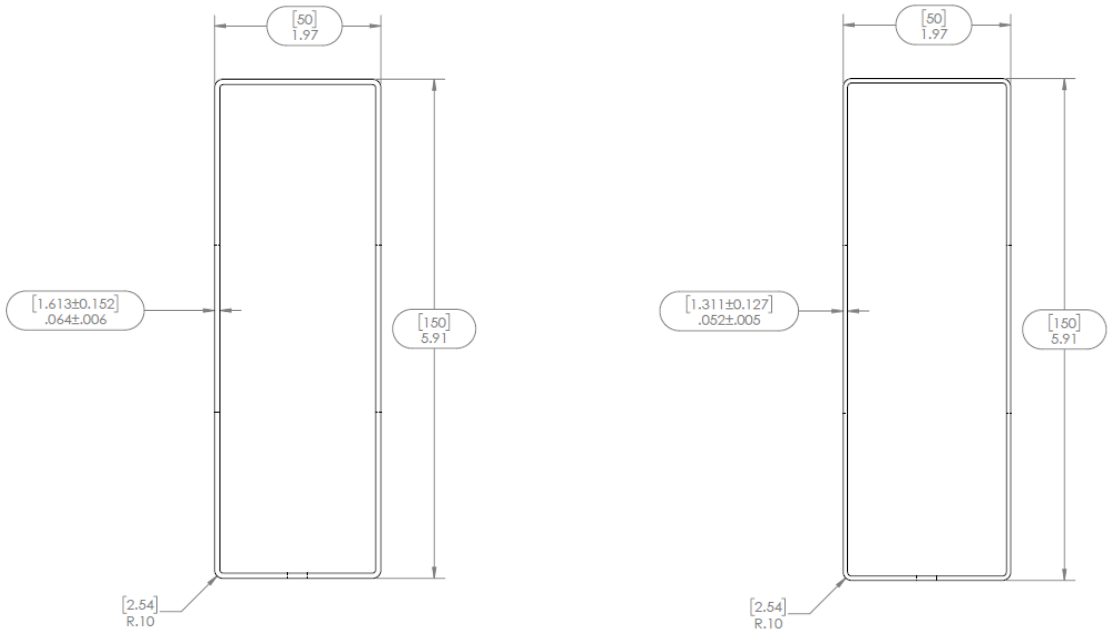

16 Gauge 18 Gauge

FIGURE 2 – STEEL JOISTS

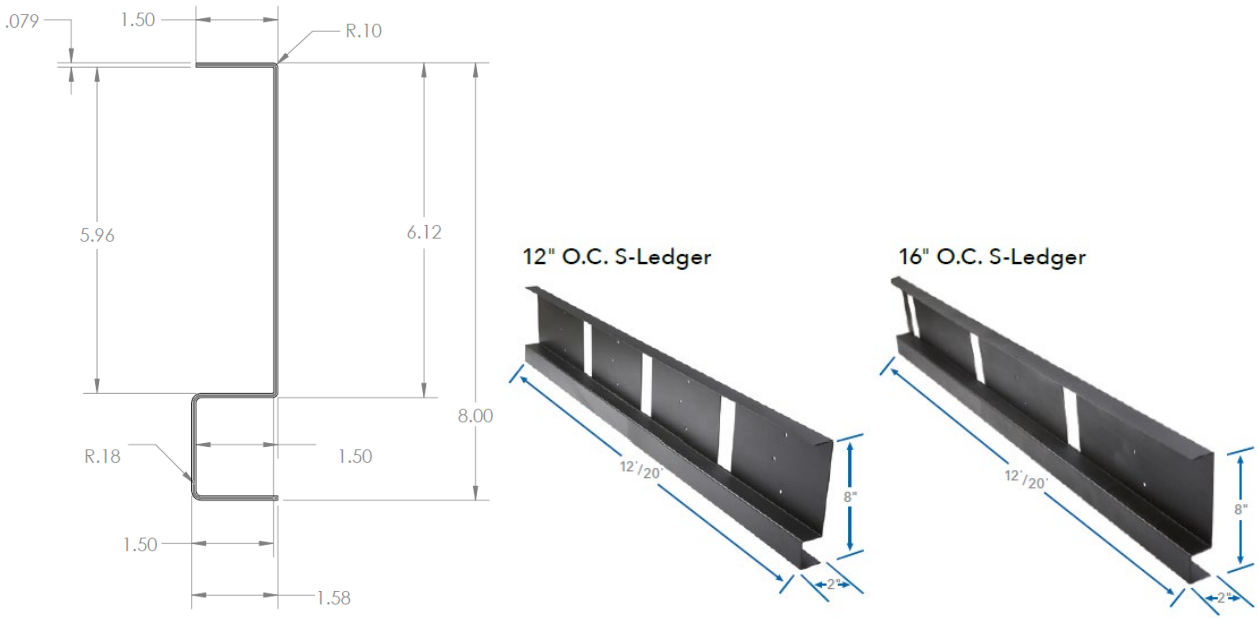

FIGURE 3 – LEDGERS

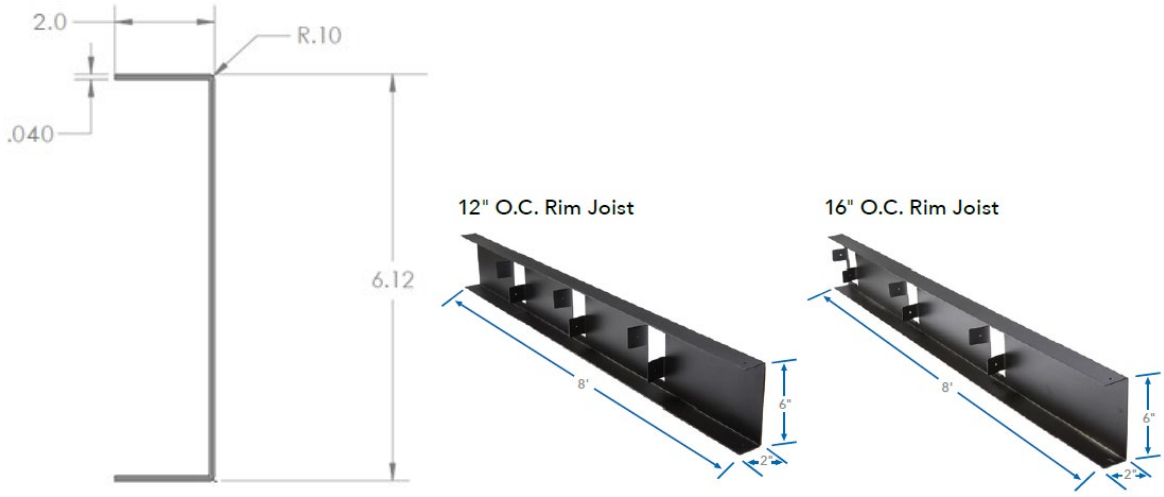

FIGURE 4 – RIM JOISTS

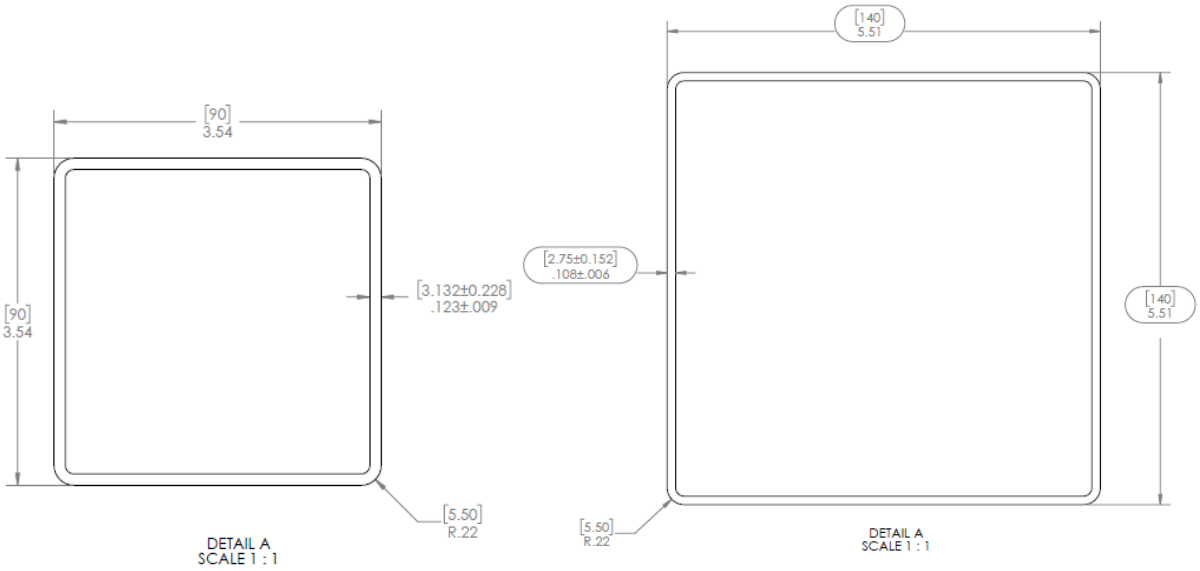

3.5-inch Square Post **5.5-inch Square Post**

FIGURE 5 – SUPPORT POSTS

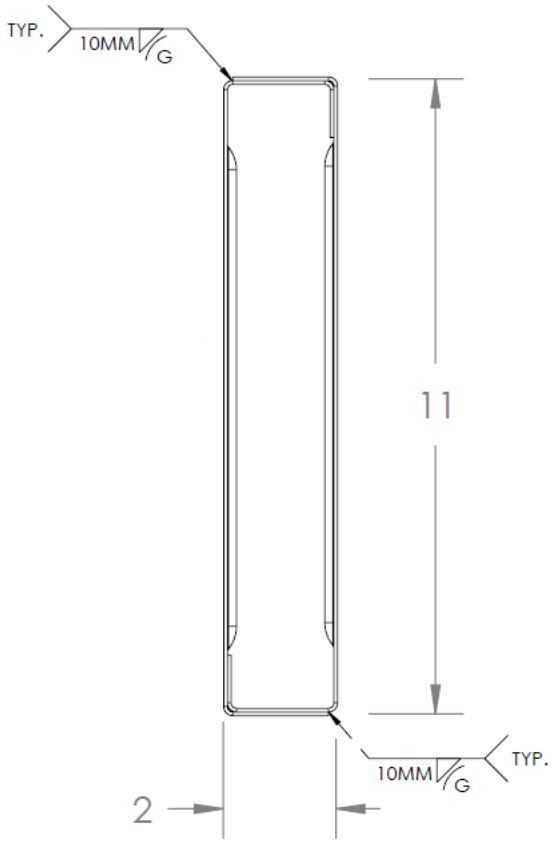

WELDS SPACED EVERY 24" APART
TOP AND BOTTOM
WELDS ARE STAGGERED TOP TO BOTTOM EVERY 12"



Single Beam

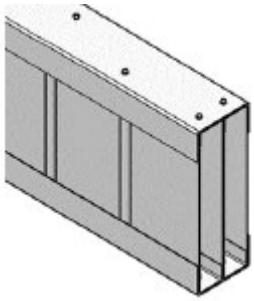

Double Beam (with Track)



Double Beam Track

FIGURE 6 – BEAMS

On both ends of the S-Ledger, and anywhere there's non-standard spacing, the F-50 Bracket is used to attach the joist in place of the Ledger Bracket. Attached using Evolution self-drilling screws.

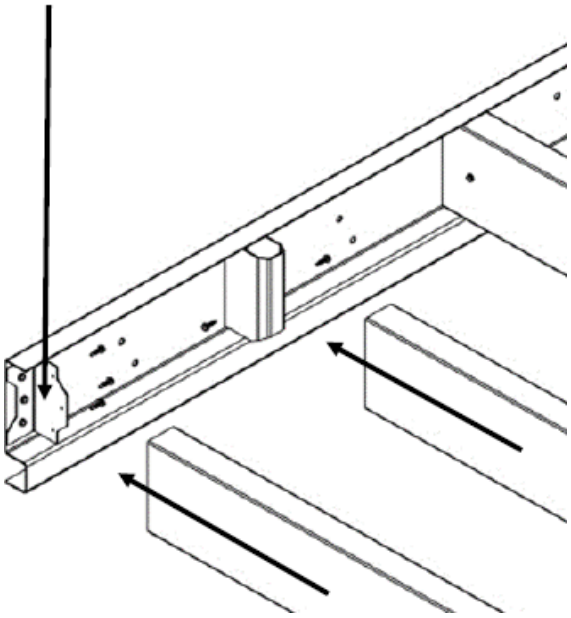

Ledger Bracket
Used with the S-Ledger and joist or fastened to a flush beam

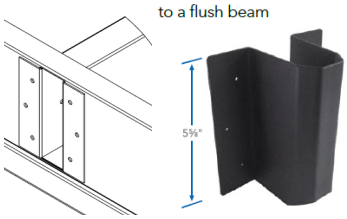

Ledger Bracket used for 12" or 16" joist spacing

F-50 Bracket
Used with S-Ledger, joist, and blocking as well as many other applications



Ledger Bracket used for non-standard joist spacing

FIGURE 7 – JOIST TO LEDGER CONNECTION

U-Rim Joist Tabs

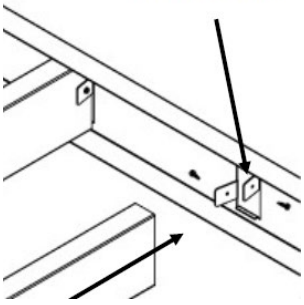

F-50 Bracket
Used with S-Ledger, joist, and blocking as well as many other applications



Rim Joist Bracket
Inserts into joist at the end of the deck for attaching the Curved Rim Joist

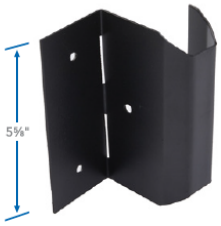

F-50 Bracket used for non-standard joist spacing

FIGURE 8 – JOIST TO RIM JOIST CONNECTION

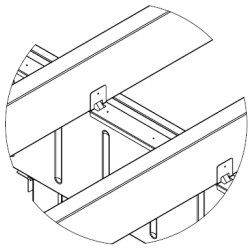

Blocking
Manufactured to match the same spacing as the S-Ledger for easy blocking of joist on a dropped beam

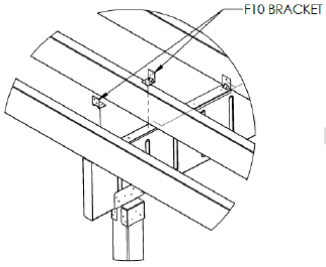

F-10 Bracket
Used to secure joist to a drop beam when non-standard spacing is required and as a cap on the bottom of the S-Ledger

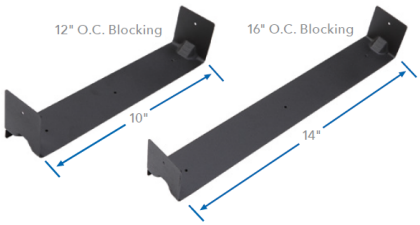



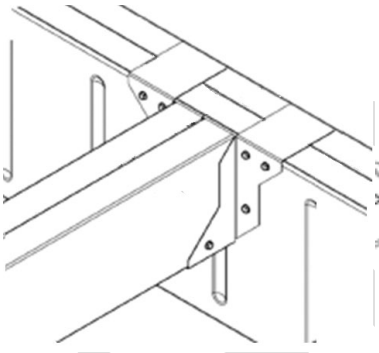

Double Hanger Bracket
Used to secure double joist or create a double (2"x6") carry beam

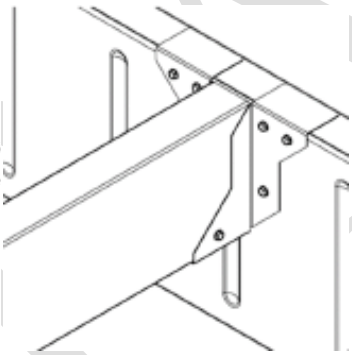

Single Hanger Bracket
Used to secure joist to flush beam applications

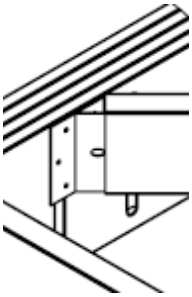

45° Bracket
Used with the Blank S-Ledger when joist extends at an angle to keep standard spacing



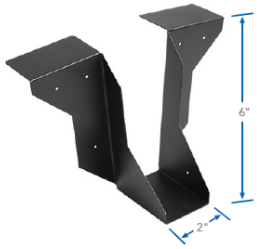

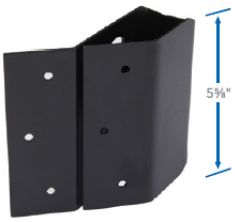

FIGURE 9 – JOIST TO BEAM CONNECTION

Strap
Manufactured to match the same spacing as the S-Ledger for easy mid-span blocking applications

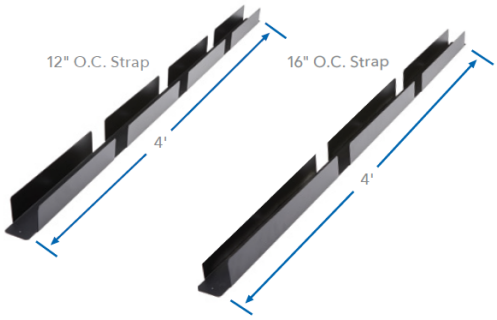

Joist Blocking
for non-standard joist spacing

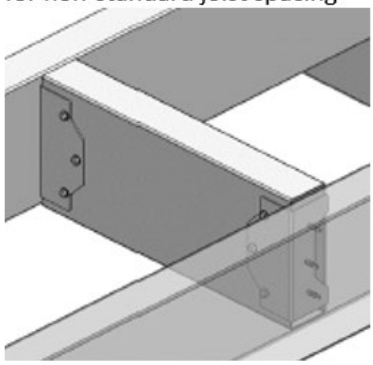

For Joist Spans greater than 8', blocking is required midspan at every bay.

There are two different installation options for the 12" O.C. and 16" O.C. straps; one for ground level decks and one for elevated decks.

Ground Level Decks

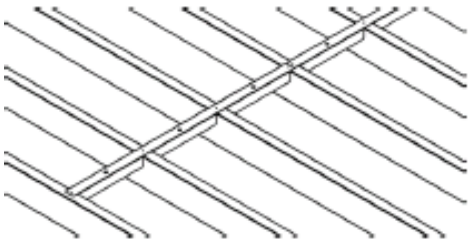

Using Evolution 12" or 16" O.C. Straps, Place on the TOPSIDE of the joist. The strap is 4' long and will cover (4) Joist for the 12" O.C. version and (3) Joist on the 16" O.C. version.

This method should only be used when the deck is ground-level and not accessible from the bottom side.

No fasteners are required when installing Strap on the top-side

Elevated Decks

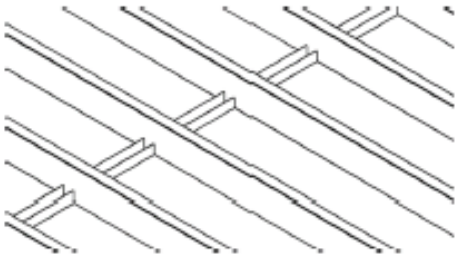

Using Evolution 12" or 16" O.C. Straps, place on the UNDERSIDE of the joist. The strap is 4' long and will cover (4) Joist for the 12" O.C. version and (3) Joist on the 16" O.C. version.

This is the preferred method for installation and should be used anytime there's access to the bottom of the deck.

FIGURE 10 – JOIST BLOCKING

Single Beam to Post

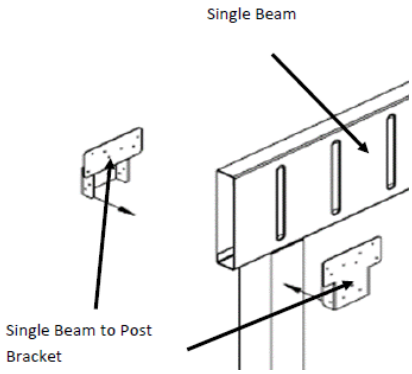

Single Beam/Post Bracket
Used to secure post to single beam



Double Beam to Post

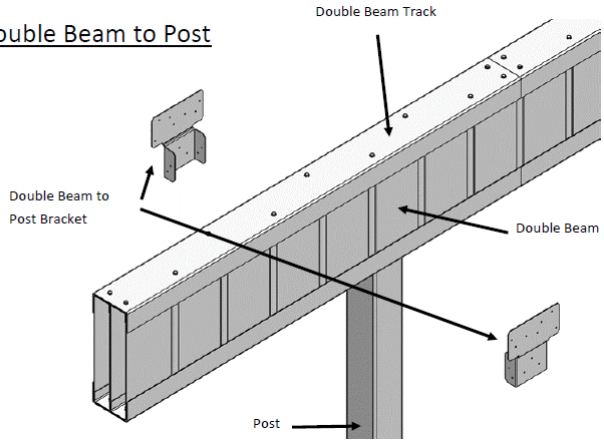

Double Beam/Post Bracket
Used to secure post to double beam



FIGURE 11 – BEAM TO POST CONNECTIONS – 3.5-INCH POST

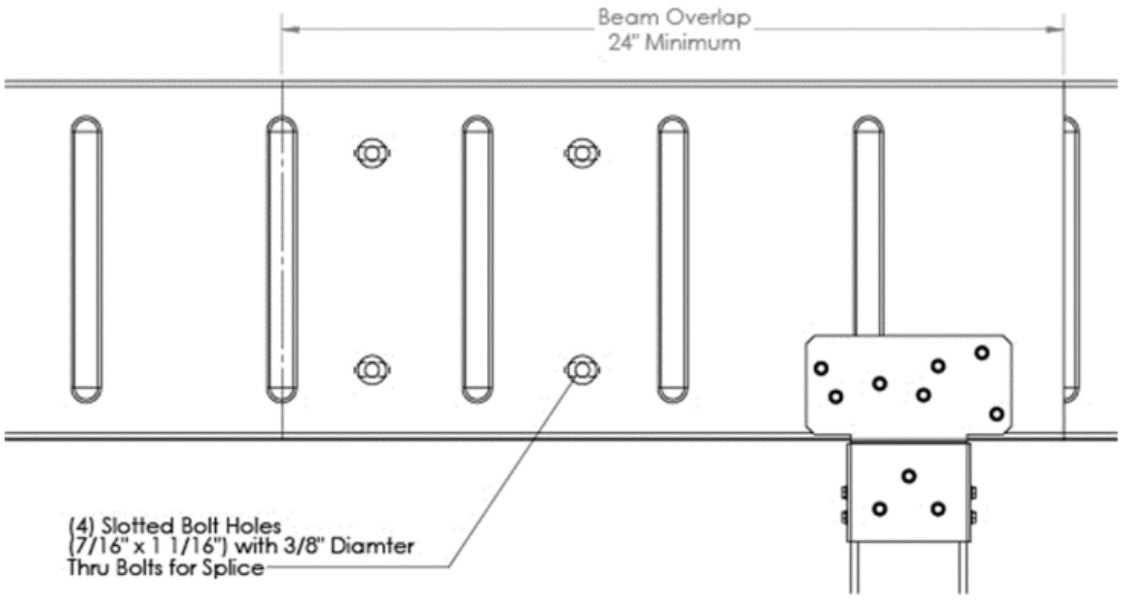

When splicing two beams, there must be 24" of overlap between the two beams. The splice must be supported by a post at any location within the beam overlap.

The beam splice is connected with (4) slotted bolt holes 7/16" x 1 1/16" with 3/8" diameter thru bolts.

FIGURE 12 – BEAM SPLICING

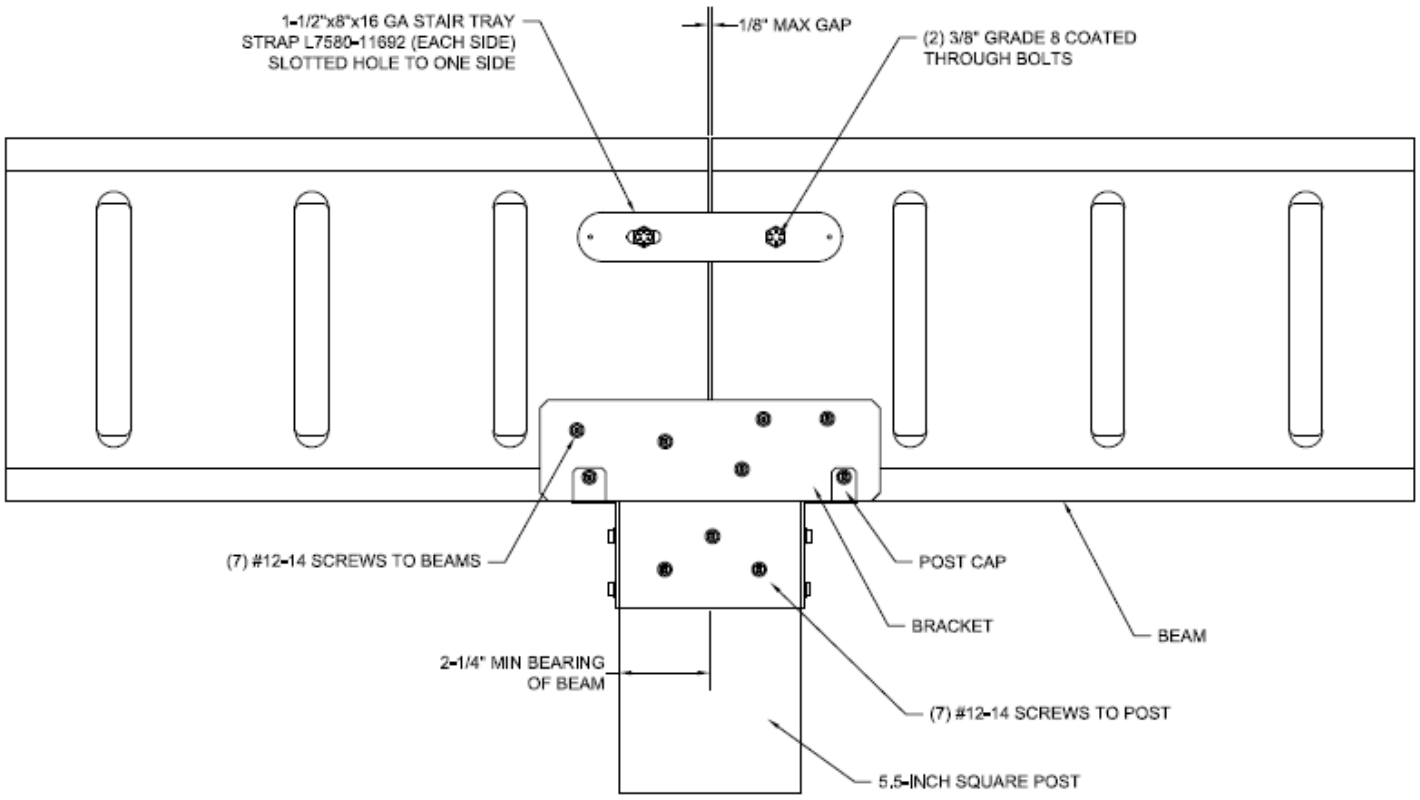

FIGURE 13 – BEAM SPLICING OVER 5.5-INCH SQUARE POST

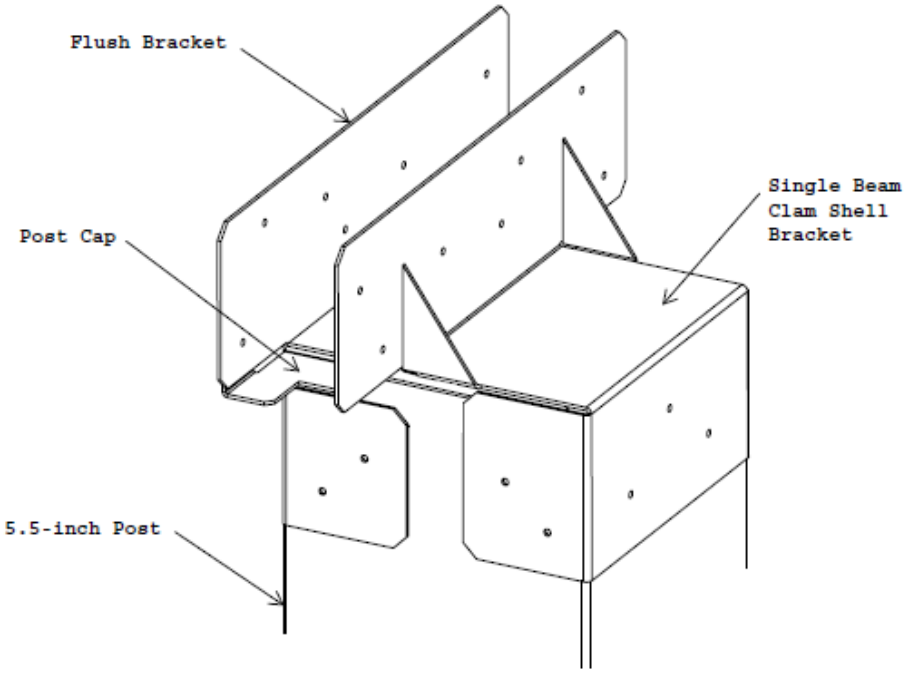

Single Beam

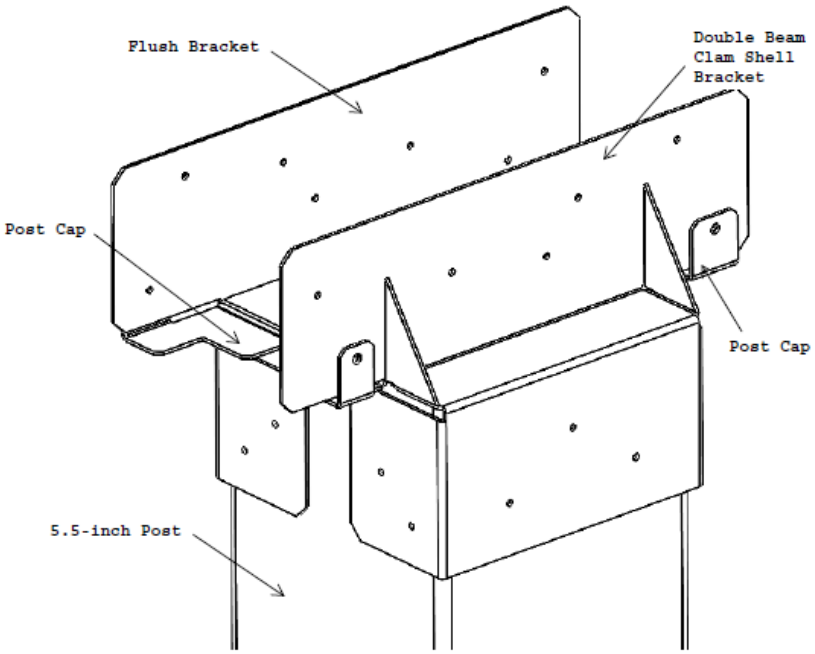

Double Beam

FIGURE 14 – BEAM TO POST CONNECTIONS – 5.5-INCH POST